Aug. 3, 1926. 1,594,557

W. L. PROEGER

FIRE POLISHING APPARATUS

Filed April 28, 1924 3 Sheets-Sheet 1

Fig 1

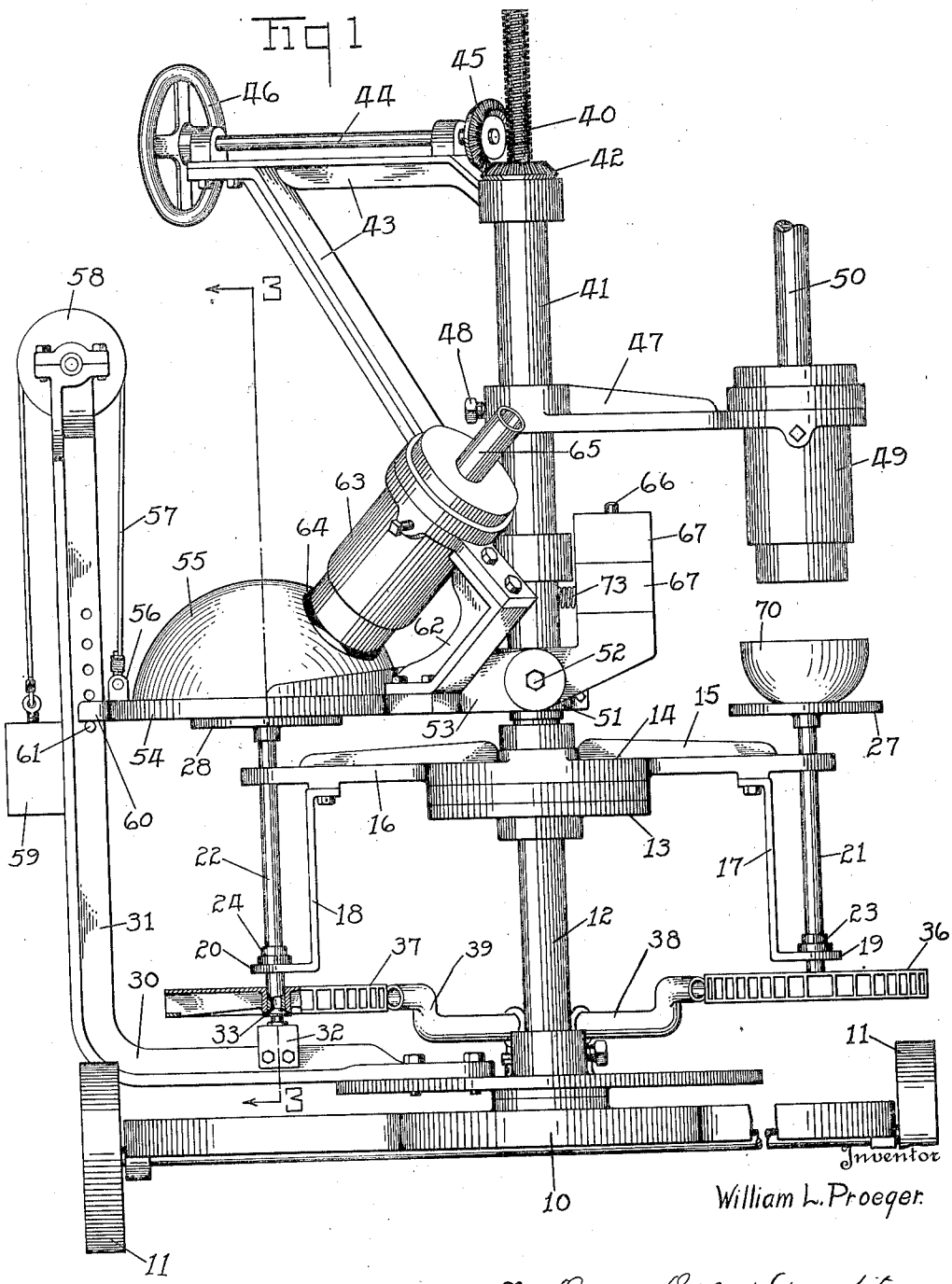

Inventor

William L. Proeger.

By Owen, Owen & Crampton

Attorneys

Aug. 3, 1926. 1,594,557

W. L. PROEGER

FIRE POLISHING APPARATUS

Filed April 28, 1924 3 Sheets-Sheet 2

Fig 2

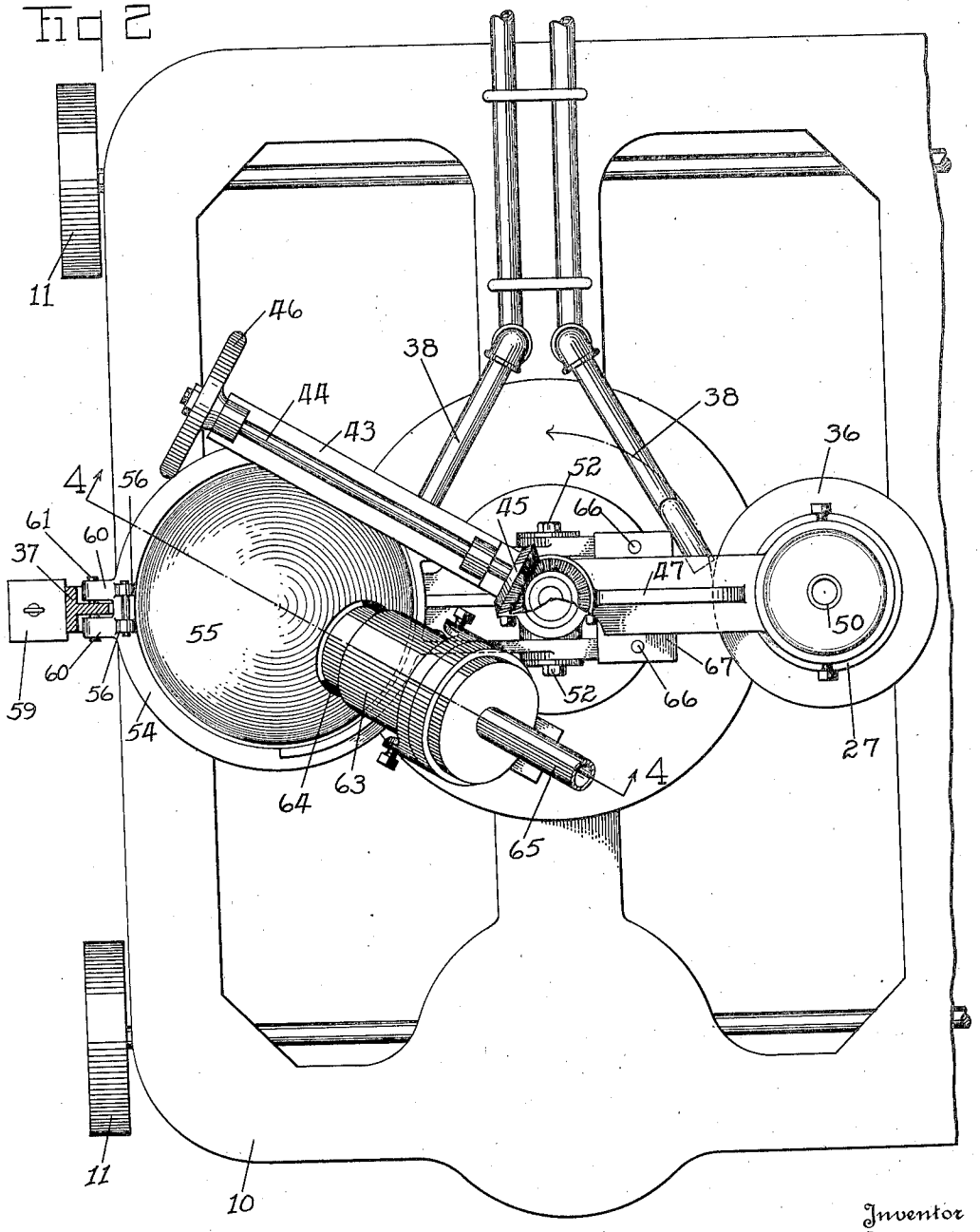

Inventor
William L. Proeger.

By Owen, Owen & Crampton

Attorneys

Aug. 3, 1926. 1,594,557

W. L. PROEGER

FIRE POLISHING APPARATUS

Filed April 28, 1924 3 Sheets-Sheet 3

Fig 3

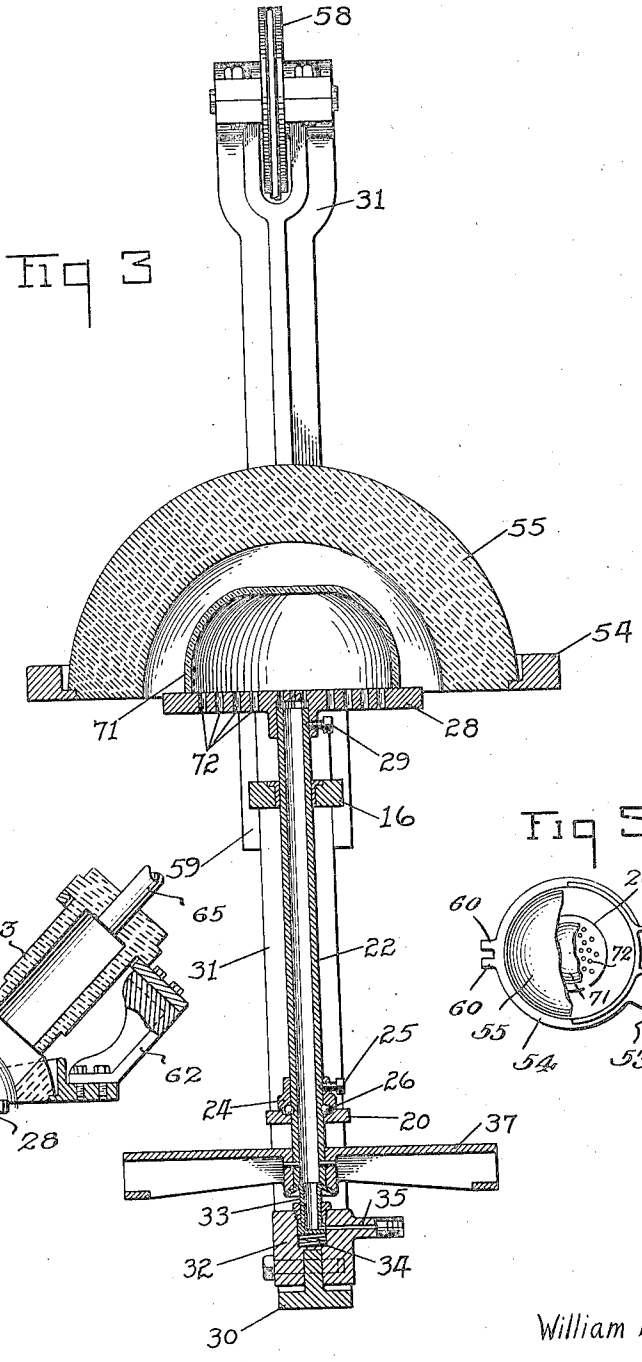

Fig. 4

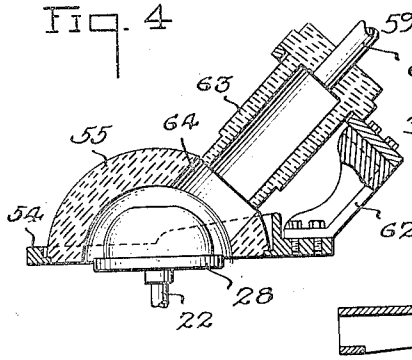

Fig 5

Inventor

William L. Proeger.

By Owen, Owen & Crampton

Attorneys

Patented Aug. 3, 1926. 1,594,557

UNITED STATES PATENT OFFICE.

WILLIAM L. PROEGER, OF TOLEDO, OHIO, ASSIGNOR TO THE LIBBEY GLASS MANUFACTURING COMPANY, A CORPORATION OF OHIO.

FIRE-POLISHING APPARATUS.

Application filed April 28, 1924. Serial No. 709,360.

My invention relates to apparatus for fire-polishing glassware and particularly to apparatus suitable for fire-polishing the outside of hollow glass articles. The object of my invention is to provide apparatus by which the outside of a hollow glass article may be fire-polished uniformly without subjecting any portion of it to excessive heat. Other objects will appear as the description proceeds.

In the accompanying drawings, Figure 1 is an elevation of apparatus embodying my invention, a portion being in section; Fig. 2 is a plan view of the apparatus, also partially in section; Fig. 3 is a section along the line 3—3 of Fig. 1; Fig. 4 is a section along the line 4—4 of Fig. 2; Fig. 5 is a plan view of the hood carrier with the burner removed.

I have shown my apparatus mounted on a platform 10 which is provided with wheels 11 so that it may be moved about the factory, as desired. A central column 12 projects upward from the platform 10 and has at its upper end a bearing 13, which supports rotatably a hub 14. Arms 15 and 16 project from the hub 14, and brackets 17 and 18 are attached to the lower sides of the arms and have bearings 19 and 20 for vertical shafts 21 and 22, which also pass through bearings in the ends of the arms. Collars 23 and 24 are fixed on the shafts by set screws 25, one of which is shown in Fig. 3. Balls 26 may be interposed between the collars and the bearings. Article carriers 27 and 28 are attached to the upper ends of the hollow shafts 21 and 22; the carrier 28 being shown as fixed in position by the set screw 29.

From the lower part of the column 12 there extends a bracket 30 having its outer end 31 projecting vertically upward. A valve casing 32 is mounted on the bracket 30 and has a nozzle 33 vertically reciprocable within its bore. The nozzle 33 is urged upward by a spring 34 and has a beveled upper end so that, when a shaft is brought over the valve casing, the lower end of the shaft contacts the upper end of the nozzle and depresses it until the shaft is substantially in alignment with the nozzle, whereupon the spring pressing the nozzle upward against the end of the shaft tends to bring the shaft into alignment with the nozzle, and to keep it there. When the nozzle is raised against the end of the shaft, the bore 35 of the casing is in line with the inlet of the nozzle so that air may be admitted to the nozzle. When the nozzle is depressed below that position and when it is allowed to move to its extreme upward position, the flow of air is cut off.

Propellers 36 and 37 are attached to the lower ends of the hollow shafts and air pipes 38 and 39 are provided in position to direct air against these propellers when one of the shafts is in alignment with the nozzle 33.

A threaded extension 40 extends upward from the column 12. A sleeve 41 about this extension may be raised and lowered thereon by means of an inner threaded sleeve having a miter-gear 42. A bracket 43 extends from collars on the sleeve 41 and supports a shaft 44 having a miter-gear 45 in mesh with the gear 42. A hand wheel 46 on the end of the shaft 44 enables the operator to raise and lower the sleeve 41 as desired.

A collar carrying arm 47 surrounding the sleeve 41 and may be held at a selected height by means of set screw 48. A burner 49 is carried by the outer end of arm 47, and is supplied with fuel from any suitable source through a pipe 50. Arm 47 extends in the opposite direction from bracket 30.

A split collar 51 is fastened on the lower end of the sleeve 41 and has projecting from its opposite sides pivots 52. A fork 53 is pivoted on the pivots 52 and carries at its outer end a ring 54 upon which is mounted a refractory hood 55. Upstanding ears 56 on the outer side of the ring 54 are connected to a cable 57, which passes over a pulley 58 on the upper end of the upward extension 31 of the bracket 30. A weight 59 is attached to the other end of the cable. Lugs 60 project outward from the ring adjacent the bracket extension 31 and are adapted to rest upon a pin 61 thrust through a selected opening in the extension.

A bracket 62 is mounted on the fork adjacent the ring, and carries a burner 63 adapted to direct a flame through an opening 64 in the hood 55. The burner 63 may be supplied with fuel from any suitable source through a pipe 65. It is preferable to have the burner as near the pivot of the fork as practicable. In order to mount the burner on the side of the hood towards the pivot, and avoid interference with the sleeve 41 when the hood is raised, the burner is

arranged at an angle to the carrier fork, as shown in Fig. 2.

The fork 53 may be extended past the sleeve 41 and have on such extension upwardly directed pins 66 upon which may be mounted weights 67. Either weights 67 or 59 may be omitted and the other counter weight made as heavy as desired, but for convenience I prefer to use counter weights at the two positions.

The use and operation of my apparatus is as follows:

The burner 49 is positioned directly opposite the hood 55 so that when the shaft 21 with its carrier 27 is beneath the burner 49, the shaft 22 with its carrier 28 will be beneath the hood 55 and over the nozzle 33. A glass article, such as a bowl 70, is placed upon the carrier 27 and the shaft carrier, and while the bowl is rotated by the propeller 36 its inside is subjected to a fire-finishing flame from the downwardly directed burner 49.

At the same time another bowl 71, which may have been previously fire-polished on the inside, is in inverted position on the carrier 28. Propeller 37 rotates the shaft 22, carrier 28 and bowl 71 so that all sides are subjected in turn to the flame from the burner 63. In the meantime, cooling air is introduced through the nozzle and hollow pipe into the interior of the bowl 71 and may escape through suitable openings 72 in the carrier. In this way, the inside of the bowl is cooled so as to prevent its wall from becoming heated to such an extent that it will be deformed.

It will be noted that the burner 63 is directed downwardly and towards the axis of the shaft 22 in such a way that the fire-finishing flame will be directed on the side of the bowl with substantially uniform effect. The exact angle of the burner may be varied somewhat with the shape of the article, but the object is to impinge the flame in such a manner that the article will be quickly and uniformly heated over its entire surface. If the flame were directed vertically downward through the center of the hood, the bottom of the inverted article would become melted before the edges next to the carrier became fire-polished, and if the flame were directed against the article horizontally, the edge resting on the carrier might become plastic before the bottom of the article was properly fire-polished. With the usual form of glass bowl, a burner at an angle of approximately 45° gives satisfactory results.

It will be readily seen that the elevation of the burners may be readily controlled by the hand wheel 46, and the mounting of the hood is such that it may be easily raised to allow a carrier with a bowl thereon to be swung into alignment with the nozzle 33, and then may be lowered into operative position. Where desired, a spring 73 may be provided in position to contact one of the weights 67 when the hood is lowered, so as to cushion the downward movement of the hood and prevent jar when the lugs 60 contact the pin 61.

More than two article carriers may be used, if desired, or the apparatus may be used with but one article carrier rotating about the central column. If desired, the article carrier might remain in one position, and be loaded and unloaded with the hood raised. Changes may be made in the mounting of the hood and burner, and various other modifications of the disclosed apparatus may be made within the scope of the appended claims and without departing from the spirit of the invention.

What I claim is:—

1. A table adapted to support an inverted article of hollow glassware, means to rotate the table about a vertical axis, and a burner inclined at an approximately 45° angle to the horizontal and adapted to play a flame against substantially all of one side of an article on the table.

2. A rotatable carrier adapted to support a glass article, a hood over the carrier, and a burner in position to direct one broad flame downwardly through the hood and in a direction to cause the flame to extend from one side substantially toward the axis of the carrier beneath the hood.

3. A carrier rotatable about a vertical axis and adapted to support a glass article, a hood over the carrier, and a burner in position to direct a flame downwardly through the hood at an angle to the vertical and towards the axis of the carrier.

4. A carrier rotatable about a vertical axis and adapted to support a hollow glass article, an inverted bowl-shaped hood over the carrier, and a burner in position to direct a single broad flame through the side of the hood downwardly and towards the axis of the carrier.

5. A carrier rotatable about a vertical axis and adapted to carry a glass article, an inverted bowl-shaped hood over the carrier, and a burner adapted to direct a single broad flame at an angle to the horizontal of practically 45° through the hood downwardly and towards the axis of the carrier.

6. In a fire-polishing apparatus, a vertical hollow shaft, a carrier on the upper end of the shaft adapted to support a hollow glass article inverted over the shaft, means to rotate the shaft, and means to connect the lower end of the hollow of the shaft with a fluid carrying pipe.

7. In a fire-polishing apparatus, a vertical hollow shaft, a foraminous plate carried on the upper end of the shaft in a horizontal position and adapted to support a hollow glass article inverted over the shaft, means to

rotate the shaft, and means to connect the lower end of the hollow of the shaft with a fluid carrying pipe.

8. In a fire-polishing apparatus, a vertical hollow shaft, a carrier on the upper end of the shaft adapted to support a hollow glass article inverted over the shaft, a burner in position to direct a flame onto the outside of a glass article so supported, and means to connect the lower end of the hollow of the shaft with a source of cooling air.

9. A carrier rotatable about a vertical axis and adapted to support an inverted hollow glass article, means to create a current of cooling air against the under side of an article supported on the carrier, an inverted bowl-shaped hood over the carrier, and a burner in position to direct a flame through the hood downwardly at an angle to the vertical and towards the axis of the carrier.

10. A carrier adapted to support a glass article, a hood above the carrier, a support for the hood pivoted on a horizontal axis at one side of the carrier, and a burner mounted on the hood support on the side of the hood towards the pivot of the support and in position to direct a flame through the hood upon an article on the carrier.

11. A carrier rotatable about a vertical axis, a hood over the carrier, a support for the hood pivoted on a horizontal axis at one side of the carrier, and a burner mounted on the hood support on the side of the hood towards the pivot of the support and in position to direct a flame through the hood downwardly and towards the axis of the carrier.

12. A carrier for a glass article, a movable support upon which the carrier is mounted rotatably about a vertical axis, a hood mounted for vertical movement above one of the positions the carrier assumes during the movement of its support, and a burner in position to direct a flame downward through the hood and at an angle towards the axis of the carrier when the carrier is beneath the hood.

13. A vertical column, a support rotatable about the column, article carriers rotatably mounted in the support, a stationary burner above one position a carrier occupies during the rotation of its support and adapted to direct a flame vertically downward upon an article on the carrier, an arm pivoted on a horizontal pivot mounted on the column, a hood carried by the arm in position to be raised and lowered over an article carrier, and a burner mounted on the arm and adapted to direct a flame through the wall of the hood downwardly and towards the axis of the carrier beneath the hood.

14. A carrier adapted to support a glass article and mounted revolubly about a central column, a hood, a support for the hood pivoted on the column, a burner mounted on the hood support on the side of the hood towards the column, but at such an angle that the burner does not contact the column when the hood is raised.

15. A support rotatably mounted about a central column, article carriers rotatably mounted in the support, a sleeve upon the column, an arm extending from the sleeve and carrying a downwardly directed burner above the path of the article carriers, a support pivoted to the sleeve and carrying a hood and burner above the path of the carriers, and means to raise and lower the sleeve with respect to the column.

16. A support rotatably mounted about a central column, article carriers rotatably mounted in the support, a sleeve upon the column, an arm extending from the sleeve and carrying a downwardly directed burner above the path of the article carriers, a support pivoted to the sleeve and carrying a hood and burner above the path of the carriers means to raise and lower the sleeve with respect to the column, and independently adjustable means for supporting the free end of the pivoted support.

17. A central column, a support rotatable about the column, article carriers rotatably mounted in the support, each carrier comprising a vertical hollow shaft, an upwardly tapered nozzle resiliently mounted beneath the path of the hollow shafts, a hood directly above the nozzle, a support for the hood, means to raise and lower the support, and a burner on the hood support and in position to direct a flame through the hood against an article on a carrier beneath the hood.

In testimony whereof I have hereunto subscribed my name to this specification.

WILLIAM L. PROEGER.