Feb. 8, 1944. B. BURNHAM 2,341,361

NUMBERING STAMP FOR PRINTING MACHINES

Filed Oct. 3, 1941 2 Sheets-Sheet 1

Fig. 1

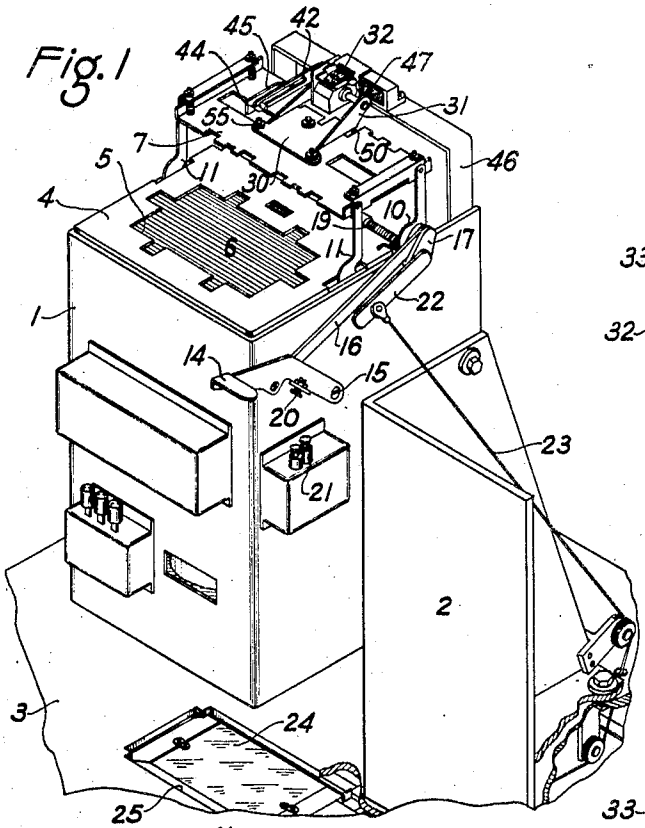

Fig. 5

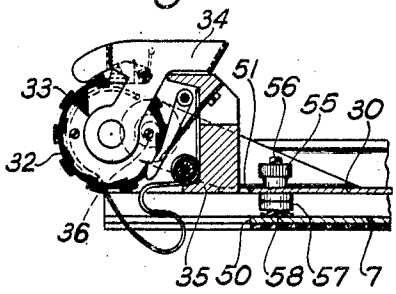

Fig. 6

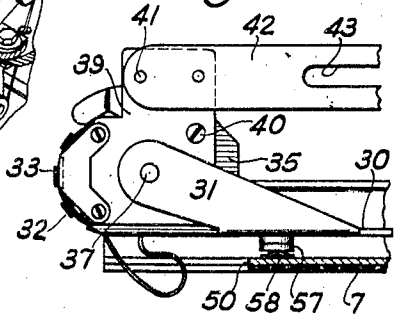

Fig. 2

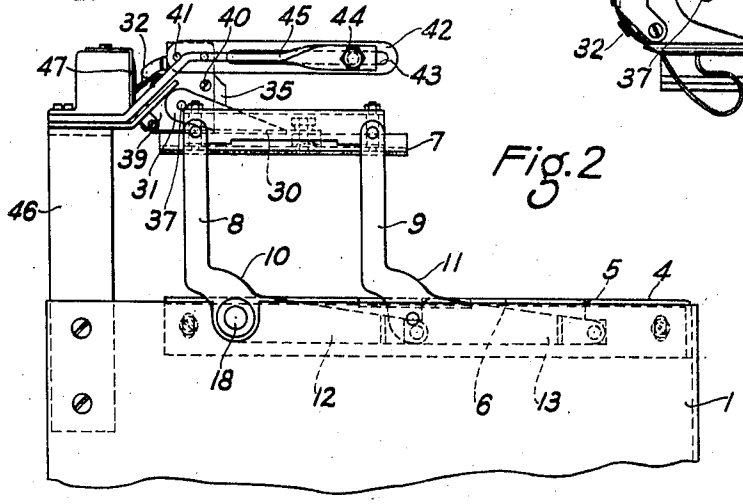

Bradshaw Burnham
INVENTOR

BY Newton N. Corrins
Donald H. Stewart
ATTORNEYS

Feb. 8, 1944. B. BURNHAM 2,341,361

NUMBERING STAMP FOR PRINTING MACHINES

Filed Oct. 3, 1941 2 Sheets-Sheet 2

Fig.3

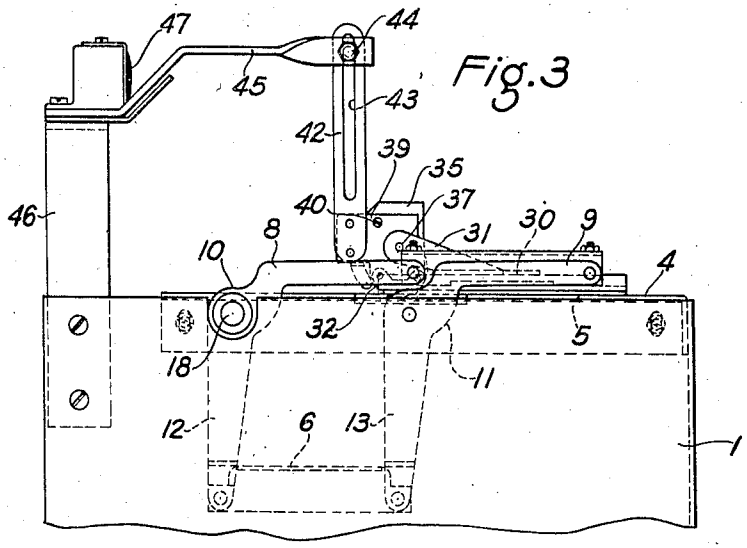

Fig.4

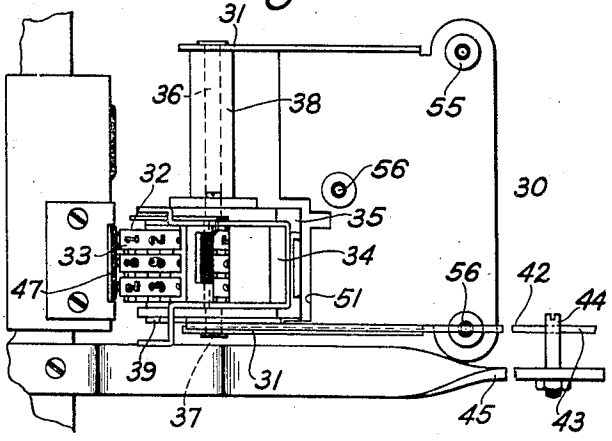

Fig.7

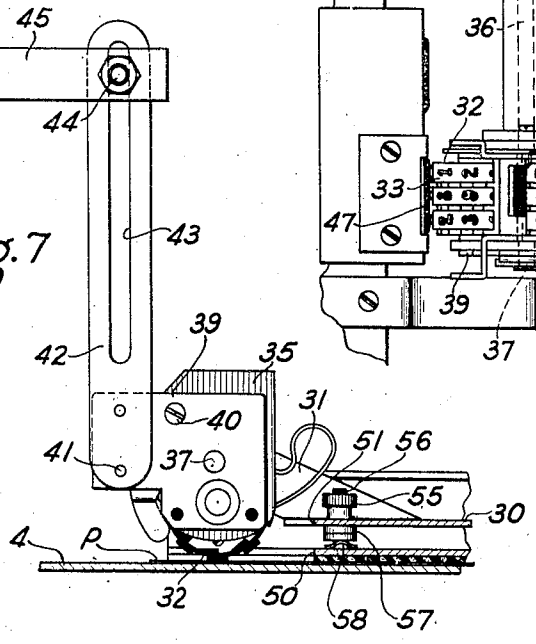

Bradshaw Burnham
INVENTOR

BY Donald H. Stewart
ATTORNEYS

Patented Feb. 8, 1944

2,341,361

UNITED STATES PATENT OFFICE

2,341,361

NUMBERING STAMP FOR PRINTING MACHINES

Bradshaw Burnham, Rochester, N. Y., assignor to Eastman Kodak Company, Rochester, N. Y., a corporation of New Jersey

Application October 3, 1941, Serial No. 413,468

2 Claims. (Cl. 101—301)

This invention relates to photographic printing machines and more particularly to numbering stamps with which an identifying number may be stamped on the print simultaneously with the printing.

It has been exceedingly difficult with the various methods now in use for stamping identification numbers on photographic prints, simultaneously with the printing, to obtain a figure which is legible and at the same time does not emboss the paper. Also, the repeated use of the stamp in many cases causes a small amount of looseness to develop in the bearings which gives the stamp an angular instability which does not maintain the stamp at the proper angle to the paper. With respect to such faults, my invention has proved an improvement over existing printing stamps, in that once the stamp is adjusted to its proper printing position, a small amount of looseness in the linkage used will cause less angular instability, and the long inter-pivot distance, especially in the printing position, is helpful in maintaining the stamp at the proper angle to the paper at all times.

One object of my invention is to provide a stamp that is readily adjustable to its printing position. Another object is to provide a stamp that at all times maintains its proper printing relationship to the paper. A further object is to provide a stamp which is movable from an inking to a printing position with the platen. A still further object is to provide a stamp which may be rotated from an inking to a printing position with as few parts as possible. Other objects will appear hereinafter from the following specification, the novel features being pointed out in the claims at the end thereof.

Coming now to the drawings wherein like reference characters denote like parts throughout.

Fig. 1 is a perspective view of a portion of a printing machine and showing a stamp constructed in accordance with a preferred embodiment of my invention in the inking position;

Fig. 2 is a side elevation of that portion of the printing machine concerning my invention in which the respective parts are shown in the inking position;

Fig. 3 is a side elevation similar to Fig. 2 in which the respective parts are shown in the printing position;

Fig. 4 is a top plan view, on an enlarged scale of the stamp operating mechanism;

Fig. 5 is an enlarged partial sectional view of the stamp advancing mechanism;

Fig. 6 is an enlarged side elevation view of the stamp as it appears in the inking position.

Fig. 7 is an enlarged side elevation view of the stamp as it appears in the printing position.

For the purpose of illustration, I have shown in Fig. 1 as a typical printing machine to which my invention may be applied, a printer fully and completely described in Patent Number 2,033,712, to R. S. Hopkins, dated March 10, 1936, and only so much of the printer as applies to the present invention will be herein described.

The printer comprises a cabinet 1 mounted on the angular member 2 which is secured to a suitable mount or tabletop 3. The cabinet 1 has a printing surface 4 for the paper P and a suitable aperture 5 which is covered by the mask 6 when the machine is not in operation. A platen 7 is pivotably secured to the arms 8 and 9 of the bell-crank levers 10 and 11, respectively, to hold the paper in position over the aperture 5 during the printing operation. The mask 6 is pivotably secured to the other arms 12 and 13 of the bell crank levers 10 and 11 and moved out of the masking position, as shown in Figs. 1 and 2, to that shown in Fig. 3 as the platen 7 is brought into paper contacting position.

The operating handle 14, pivoted on the cabinet 1 at 15, is connected through the levers 16 and 17 to the shaft 18 on which the bell crank levers 10 are fixed. As the operating handle 14 is moved downward, the shaft 18 is rotated counter-clockwise, and likewise, the bell crank levers 10 and 11 to bring the platen 7 into a paper engaging position on the printing surface 4 and to remove the mask 6 from the aperture 5. On releasing the operating handle 14, the spring 19 on the shaft 18 returns the parts to their respective positions, as shown in Fig. 1. As the operating handle nears the end of its downward movement, a contact screw 20 actuates the printing lamp switch 21, and the lever 22 fixed to the shaft 18 together with the cable 23 removes the spring retained translucent mask 24 from the aperture 25 in the table top 3 to permit the light from the printing lamp to reach the sensitized paper P on the printing surface 4. The negative together with the negative holder, the printing lamp, and the optical system has not been shown, since it forms no part of the present invention.

Coming now to the invention, on the platen 7 is mounted a support member 30 having upstanding ears 31 that form a support for the stamp designated broadly as 32. The stamp 32 consists of three wheels of numerals 33, as shown in Fig. 4, with a manual advancing lever 34,

mounted in the member 35, the operation of the stamp and the mechanism thereof, as shown in Fig. 5, being familiar to those skilled in the art.

The member 35 is supported by the two shafts 36 and 37 between the ears 31 of the support member 30, with a spacer 38 provided on one side in the event that a single stamp, as shown, is used. A plate 39 is fastened to the member 35 by the screws 40 and has secured to it, by the rivets 41, an arm 42 having a slot 43. A stud 44 is fixed to a second arm 45 which is mounted on the bridge member 46, carrying an inking pad 47, and engages the slot 43 to provide the pivot about which the arm 42 is rotated as the stamp 32 is moved from an inking to a printing position.

As shown in Figs. 2, 4, and 6, the stamp 32 is in the inking position with the arms 42 and 45 parallel to each other. As the operating handle 14 is moved downward and the bell crank levers 10 and 11 move the platen 7 into paper contacting position, the arm 42, attached to the plate 39 on the member 35, is rotated about the stud 44 together with the stamp 32 until in the paper contacting position the arm 42 is at right angles, or substantially so, to the arm 45, as shown in Figs. 3 and 7. A cut out portion 50 in the platen 7 and 51 in the support member 30 allows the stamp 32 access to the paper P for printing the designated numeral thereon. The various parts are then returned to the position shown in Fig. 2 by the spring 19.

The stamp 32 is adjusted with respect to the paper, as shown in Fig. 7, by three threaded nuts 55 on the studs 56 carried by the platen 7. Two washers 57 and a spring washer 58 are provided between the platen 7 and the support member 30 for obtaining the correct relationship between the stamp and the paper. Any further adjustment is then compensated for by either tightening or loosening the threaded nuts 55. It can be readily appreciated, by referring to Fig. 7, that any looseness that may become apparent between the slot 43 and the stud 44 will not affect the position of the stamp 32 due to the long inter-pivot distance.

I claim:

1. In a photographic printing machine having a sheet supporting surface, the combination with a frame, a platen having a sheet engaging surface, a parallelogram linkage, including a pair of arms pivotally connected in spaced relation to said frame and platen and movably supporting said platen in parallel relation to said sheet supporting surface, a support on said platen, a stamp assembly pivotally mounted in said support for movement about an axis and having a type surface, and a support arm on said frame and over said sheet supporting surface, of an operating arm fixed to said stamp assembly but slidably and pivotally connected to said support arm and for rotating said stamp assembly from an inking position to a printing position when said platen is moved to engage a sheet on said sheet supporting surface, the distance from the pivotal connection on said support arm to the pivotal axis for said stamp assembly being several times the distance from said axis to the type surface of said stamp assembly.

2. In a photographic printing machine having a sheet supporting surface, the combination with a frame, a platen having a sheet engaging surface, a parallelogram linkage, including a pair of arms pivotally connected in spaced relation to said frame and platen and movably supporting said platen in parallel relation to said sheet supporting surface, a support on said platen, a stamp assembly pivotally mounted in said support for movement about an axis and having a type surface, and a support arm on said frame and spaced above said sheet supporting surface a distance greater than the length of the arms of said parallelogram linkage, of an operating arm fixed to said stamp assembly but slidably and pivotally connected to said support arm and for rotating said stamp assembly from an inking position to a printing position when said platen is moved to engage a sheet on said sheet supporting surface, the distance from the pivotal connection on said support arm to the pivotal axis for said stamp assembly being several times the distance from said axis to the type surface of said stamp assembly, and an adjustable means between said platen and said support thereon for varying the relative position of said type surface in its printing position with respect to the sheet engaging surface of said platen.

BRADSHAW BURNHAM.