Feb. 17, 1948. M. G. WHITFIELD 2,435,991

MANUFACTURE OF BIMETALLIC ARTICLES

Filed June 21, 1944

Fig. 1.

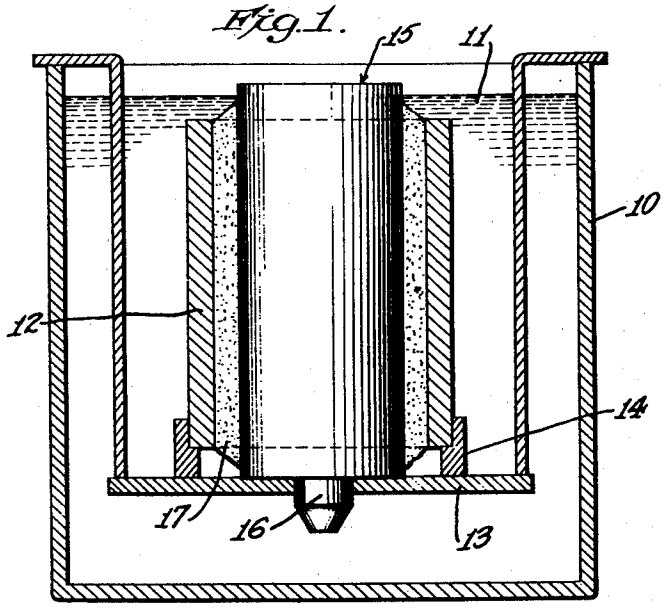

Fig. 4.

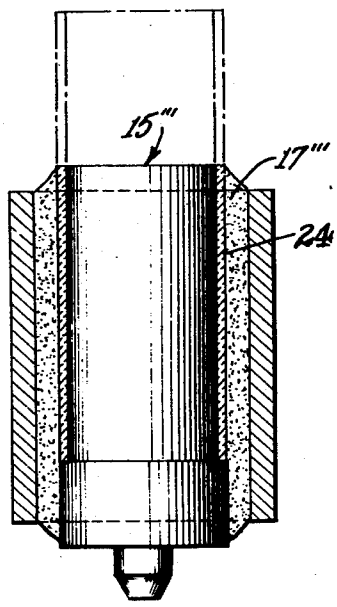

Fig. 2.

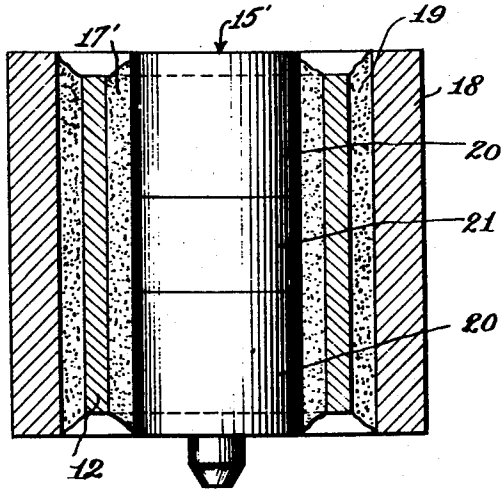

Fig. 3.

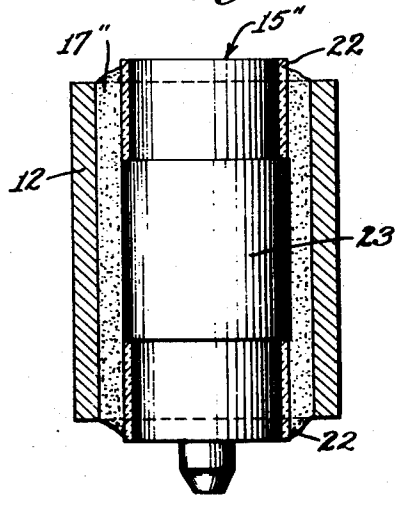

INVENTOR:
MARSHALL G. WHITFIELD
BY
Hoyt, Dearborn & Campbell
ATTORNEYS

Patented Feb. 17, 1948 2,435,991

UNITED STATES PATENT OFFICE

2,435,991

MANUFACTURE OF BIMETALLIC ARTICLES

Marshall G. Whitfield, Garden City, N. Y., assignor, by mesne assignments, to Fairchild Engine and Airplane Corporation, New York, N. Y., a corporation of Maryland

Application June 21, 1944, Serial No. 541,332

7 Claims. (Cl. 22—204)

1

This invention relates to the manufacture of bimetallic articles, such as bearings, bushings, and the like, and has particular reference to methods and apparatus for making the same of ferrous metal shells lined with aluminum containing metals including aluminum and aluminum base alloy.

Among the difficulties which has attended the manufacture of aluminum-lined bearings of sufficient strength to withstand heavy loads under rigorous operating conditions are the impaired internal alloy structure, or the bond between the bearing shell and the aluminum alloy, or both, which defects are largely due to unequal shrinking of the aluminum alloy in freezing after it has been cast. Resulting bearings have either failed by stripping of the aluminum alloy liner wholly or partially from the backing shell or by radial or annular cracking within the liner.

In accordance with the present invention, methods are provided for lining ferrous metal backing shells with aluminum bearing alloy under such conditions that the freezing of the aluminum alloy does not impair its bond with the ferrous metal, and cracking, checking, splitting, or unequal strains within the liner which might lead to failure are precluded. Apparatus for conducting the methods to achieve the described results are also provided in accordance with this invention.

The preferred method of this invention essentially comprises heating the surface of the steel or other ferrous metal bearing shell to be lined to a temperature at which it alloys with the molten aluminum-containing bearing metal and, while molten bearing metal lies in contact with the shell, rapidly freezing the same to the desired thickness required for the liner plus the amount which is to be removed by machining. This method is preferably carried out by immersing the ferrous metal shell in a molten bath of the aluminum-containing bearing metal for a sufficient time to effect alloying therewith, and then, while still immersed in the bath, rapidly freezing that part of the aluminum bath overlying the shell by contacting it with a cold metal mass which abstracts heat from the layer of aluminum-containing metal on the ferrous metal shell. The bearing thus formed is immediately thereafter removed from the bath of molten metal before the cold metal mass is heated to the temperature at which it ceases to keep the aluminum layer cooled and frozen.

A modification involves differentially cooling selected areas of the aluminum-containing liner,

2

whereby the rate of aluminum alloy freezing may be controlled. Such differential cooling is effected by composite cold metal freezing masses, portions of which have high heat capacity and others have lower heat capacity or conductivity. Alternatively, the cold metal mass may be coated with a partial insulator, or have applied to it in whole or in part a layer of lower or higher heat conductivity material, which in some applications may be adjustable relatively to the cold metal mass to obtain progressive freezing along selected areas of the aluminum-containing liner.

It will be seen that the methods and apparatus of this invention produce very sound bearings with resultant uniform dispersion of the alloying components of the liner, due to the extremely rapid freezing action induced by the cold metal freezing mass, which is an essential requirement of alloys containing tin and lead whose uniform dispersion is difficult to obtain. Also, the novel methods of freezing the liner, whether conducted uniformly over the entire liner area, or differentially, preclude strains within the cooled bearing metal which would likely result in bearing failure, and also prevent impairment of the bond between the aluminum alloy and the steel or other ferrous metal shell.

For a more complete understanding of the invention, reference may be had to the accompanying drawings, in which:

Figure 1 illustrates one method of making steel-backed aluminum alloy bearings or bushings according to this invention;

Fig. 2 illustrates a method of making dual bearings and also differential cooling of selected portions of the bearing liner during manufacture; and

Figs. 3 and 4 illustrate modified methods of differentially cooling the bearing liner.

Referring to the drawings, numeral 10 designates a crucible or vat containing the bath 11 of molten aluminum alloy with which it is desired to line the interior surface of the ferrous metal tubular bearing shell 12. The aluminum alloy bath 11 contains predominantly aluminum alloyed with a relatively small percentage or percentages of tin, nickel, silver, lead, or the like. As an example, an excellent aluminum alloy for bearing purposes is one comprising 94% commercially pure aluminum and 6% tin, although any desirable aluminum-containing bearing metal may be employed with equal facility. Although the invention is particularly adapted to ferrous metal shells lined with aluminum alloys, it may

be used with equal facility with other bearing metals, depending upon requirements.

The ferrous metal bearing shell 12 is preferably a steel such as low carbon steel, or any alloy of steel commonly used or desirable for bearing shells. If only the inner surface of the shell 12 is to be lined or coated, the outer surface is preferably coated with a suitable stop-off solution, such as a lime or graphite solution, in order to prevent adhesion of the liner material thereto. The inner surface of shell 12, which is to be lined, is cleaned of foreign matter, but need not be chemically clean.

The shell 12 may be supported on a suitable rack 13 having spacers 14 for holding the shell 12 in fixed position with its axis extending vertically. Concentric with spaces 14 is an aperture in the rack 13 for the reception of the reduced end of a relatively large core 15 made of material having a large heat capacity such as, for example, steel of low carbon content. Preferably, but not necessarily, core 15 is formed of a steel alloy having approximately the same coefficient of thermal expansion as the aluminum alloy comprising bath 11. As an example, a nickel-steel alloy containing approximately one-third nickel, has about the same coefficient of thermal expansion as aluminum, and provides the advantage that the liner and core contract. The core 15 may be pushed out of the bearing without the exercise of any considerable amount of force, when both core and bearing are cool.

The function of the core 15 is three-fold; it is of a dimension to provide an annular space between its outer surface and the inner surface of the shell 12 of the thickness desired for the liner, plus an adequate amount for machining; also it has a high heat capacity, causing rapid heat abstraction from the aluminum alloy in the annular space between the outer surface of the core 15 and the inner surface of shell 12, and it expands on abstracting heat from the liner to apply pressure thereto while the liner cools down to approximately room temperature. By a cold core 15 is meant cold in the sense that its temperature before immersion in the molten bath 11 is materially lower than the temperature of the bath, say approximately room temperature. Means may be provided for cooling core 15, such as by circulating a liquid therethrough or by filling it with a material having higher heat capacity than the solid steel through the required temperature range.

In conducting the process of this invention, the steel shell 12, supported on rack 13, is immersed within the molten bath 11, and retained therein for a sufficient time for at least the inner surface of the shell 12 to achieve the temperature of the molten bath 11, at which time the aluminum of the bath alloys with the ferrous metal on the inner surface of the shell 12 to form a ferro-aluminum alloy at the interface. Ordinarily, due to its thinness, the heat capacity of the steel shell 12 is relatively low, and hence the time required for heating the shell to the alloying temperature and the alloying action between the aluminum and the steel may require less than a minute. By means of the interface alloy, the aluminum alloy becomes bonded to the shell 12.

Immediately upon formation of the interface alloy, the cold core 15 is inserted within the shell 12, being centered with respect to the shell by reason of the cooperation of the reduced extension 16 thereon with a centering hole in the rack 13. The core 15 being cold, immediately draws heat from the surrounding aluminum alloy, and, inasmuch as the most of the surrounding aluminum alloy lies in the annular space between the inner surface of shell 12 and the exterior surface of core 15, that aluminum alloy freezes rapidly. Such freezing takes place in a matter of seconds, although the time may be more, depending upon the volume of the annular space. Thereupon the rack 13 bearing the shell 12, core 15, and the frozen aluminum alloy liner 17 between the shell 12 and the core 15 is withdrawn from the bath 11 and cooled in air. Such removal must be effected before the core 15 is heated to a temperature such as to cease abstracting heat from the intervening aluminum alloy liner 17, so that the latter remains frozen to the shell 12. The aluminum alloy liner does not bond to the core 15 because the surface of the latter has not been heated to the temperature at which the alloying necessary to aluminum bonding can take place, and it may be graphite-coated as an additional precaution.

During air cooling of the liner after removal from the molten bath 11, the core 15 gives support and applies radial pressure to the liner 17, because the shell 12 is cooled rapidly in air and thus contracts somewhat while the core 15 continues to abstract heat from the liner 17 and thus expands. This expansion of core 15 results in the application of uniform radial pressure between the aluminum liner 17 and the interior surface of the shell 12 and this pressure precludes impairment of the bond between them, which otherwise would tend to rupture owing to unequal contraction of the liner 17 and the shell 12. This uniform radial pressure while cooling also effects uniformity of liner structure throughout, without internal strains.

Upon cooling to near room temperature the bearing comprising shell 12 and its liner 17 may be readily stripped from the steel core 15, this stripping being facilitated if the core 15 is made of a material having about the coefficient of expansion of aluminum, such as the nickel alloy mentioned.

The aluminum alloy liner 17 is accordingly bonded to the steel shell 12 through the intervening ferro-aluminum alloy between the shell 12 and the liner 17, and is homogeneous and free of internal strains, cracks or checks, with the result that a very sound bearing adequate to withstand heavy loads for all machine purposes is provided. It is believed that the rapid freezing and radial pressure effected by the cold core 15 causes the favorable formation of the lining 17 with uniform dispersion of any alloying metal contained in the aluminum.

The bearing shell thus formed may be completed in the usual way by machining the inner surface of the liner 17 to the proper dimensions, and providing it with oil holes and grooves, as desired.

Dual bearings or bushings having bearing metal layers bonded to both inner and outer surfaces of the shell may be formed as illustrated in Fig. 2. After the ferrous metal shell 15' has been heated to the proper alloying temperature in the molten metal bath 11, the cold core 15' is inserted in the manner and for the purpose described and simultaneously a cold sleeve of the similar properties of high heat capacity as core 15' may be placed around shell 12, as shown in Fig. 2. The sleeve 18 is centered with respect to shell 12 as on rack 13, to provide an annular space 19 of the

proper thickness. The molten bearing metal in this annular space 19 freezes quickly by reason of abstraction of heat therefrom by the cold sleeve 18 in the same manner as described in connection with the cold core 15'.

After removal from the molten metal, sleeve 18, like core 15 or 15', continues to abstract heat from the adjacent bearing metal layer 19.

Where only external bearings or bushings are to be made, sleeve 18 will be used alone without core 15' and the inner surface of shell 12 will be coated with a suitable stop-off solution in the manner described.

Fig. 2 also illustrates an arrangement whereby the rate of freezing of the aluminum alloy liner within a bearing may be maintained substantially uniform throughout its axial length by differentially cooling the same. This method has advantage in the case of long bearing shells, or multiple shells which are to be severed into shorter lengths, since the cooling rate at the axial center of the shell is different than that at the ends of the shell. By making the cold core 15' composite, with the outer ends 20 of material having lower thermal conductivity than the center section 21, the heat is abstracted from the liner at the center section at about the same rate that the heat is abstracted therefrom at its end sections. Thus, the core 15' may be made of a steel center section 21 and cast iron end sections 20, cast iron having a lower conductivity than steel. The use of a composite shell 15' of the construction described precludes maintenance of molten or plastice center portions of the liner 17' after the ends thereof have frozen or solidified. In the same way, sleeve 18 may be made composite.

The modification of Fig. 3 attains the same or similar end as that procured by the differential cooling arrangement of Fig. 2, except that the core 15'' is provided with partially heat-insulated ends 22 which may be ceramic or other insulating layers, so as to not conduct heat away from the aluminum alloy liner 17'' as rapidly as does the center section 23 from the core 15''.

Progressive freezing of the liner 17''' may be obtained by providing an insulating sleeve 24 which is axially adjustable along the steel core 15'''. Thus as the aluminum liner 17''' begins to freeze, the sleeve 24 is gradually withdrawn, as indicated by the dotted lines in Fig. 4, to progressively cool the sleeve from the lower end to the upper end at a uniform or non-uniform rate, as the case may be, depending upon the rate of withdrawal of sleeve 24 and whether or not the withdrawal is continuous or step-by-step. In this way the structure of the aluminum alloy liner may be controlled from one end of the bearing to the other. In any case, the exterior of the steel shell 12 may be heat-insulated after withdrawal from bath 11 to retard cooling, or it may be quenched or otherwise cooled to hasten freezing of the liner radially inwardly.

It will be observed that in each instance the cold core, 15, 15'', or 15''', as well as cold sleeve 18, extends beyond the ends of the shell 12 and the heat capacity of these extended portions also contributes to the freezing of the aluminum alloy liner by abstracting heat therefrom. Accordingly, these extensions cool the liner directly at its outer ends, and indirectly at its axial center zone by conduction of heat abstracted therefrom through the body of the core toward the extended opposite ends thereof. This advantage combined with the differential heat abstraction afforded by the composite or partially insulated cores of Figs. 2 to 4, inclusive, enables accurate control of the cooling of the liner in accordance with requirements.

It will be understood that different aluminum alloys require different cooling rates in order to obtain the unstrained structure desired for the liner, and this also applies to bearing metal liners made of alloys containing smaller percentages of aluminum, or alloys not containing aluminum, such as alloys of various desirable compositions whose cooling rates may be controlled to advantage in accordance with the present invention.

It will also be understood that the invention is equally applicable to bushings and other articles of any shape, including straight or curved strips, involving the controlled freezing of a bearing metal liner or layer to one or both surfaces of a backing member of steel or other material to which the dissimilar metal is bonded or otherwise secured, that the term "bearing" as used herein and in the claims includes such bushings, straight or curved strips and the like, and that the term "liner" as used herein and in the claims means the layer of aluminum-containing metal that is applied to the metal base or "shell" of any shape or dimensions.

Although certain embodiments of the method and apparatus of this invention have been illustrated and described herein, the invention is not limited thereby but is susceptible of changes in detail and form within the scope of the appended claims.

I claim:

1. The method of lining a bearing shell with lining metal, which consists in preliminarily conditioning the surface of the shell by immersing the same in a bath of the lining metal in the molten state, freezing a layer of said molten lining metal on said surface by transferring heat therefrom to a cold body in contact therewith, and applying pressure to said freezing lining metal as it cools by means of the thermal expansion of the body as it is heated by said transfer of heat thereto from the lining metal without removing the same from said bath.

2. The method of lining the inner surface of a tubular metal bearing shell with lining metal, which consists in preliminarily conditioning said surface by immersing the same in a bath of the lining metal in the molten state, and introducing a cylindrical cold metal body into the center of said shell while immersed in the bath to thereby freeze an annular layer of the lining metal to the said surface of the shell by transferring heat from said layer to said body, and then removing said shell, liner, and body from said bath for cooling the whole.

3. The method of lining the surface of a tubular metal bearing shell with lining metal, which consists in preliminarily conditioning said surface by immersing the same in a bath of the lining metal in the molten state, and placing a tubular cold metal body about said shell while immersed in the bath to thereby freeze an annular layer of the lining metal to the said surface of the shell by transferring heat from said layer to said body, and then removing said shell, liner, and body from said bath for cooling the whole.

4. The method of lining the inner and outer surfaces of a tubular metal bearing shell with lining metal, which consists in preliminarily conditioning said surfaces by immersing the same in a bath of the lining metal in the molten state, passing a tubular cold metal body about said shell and introducing a cylindrical cold metal

body into the center of said shell while immersed in the bath to thereby freeze an annular layer of the lining metal to the said surfaces of the shell by transferring heat from said layers to said bodies, and then removing said shell, liner, and bodies from said bath for cooling the whole.

5. The method of applying a layer of aluminum-containing metal to the surface of a ferrous metal article, which consists in immersing the article in a bath of the molten aluminum-containing metal for a sufficient time to form a ferro-aluminum alloy at the interface between the surface of the article and the molten aluminum-containing metal in contact therewith, forming between said alloyed surface of said article and a cold metal mold spaced therefrom a layer of the aluminum-containing metal of the desired thickness, and freezing the said layer on said surface of the article by transferring heat from said layer to said cold metal mold without removing the same from said bath, whereby said layer is permanently bonded to said ferrous metal article when cooled.

6. The method of applying a layer of aluminum-containing metal to the surface of a ferrous metal article, which consists in immersing the article in a bath of the molten aluminum-containing metal for a sufficient time to form a ferro-aluminum alloy film on the surface of the article at the interface between that surface and the molten aluminum-containing metal in contact therewith, forming between said alloyed surface film of said article and a mold spaced therefrom a layer of the aluminum-containing bath metal of the desired thickness without removing the same from the bath, initially freezing the said layer on said surface of the article without removing the same from said bath, removing the article and said layer from the bath, and cooling the same substantially to room temperature,

whereby said layer is permanently bonded to said ferrous metal article through said ferro-aluminum film.

7. The method of applying a layer of aluminum-containing metal to the surface of a ferrous metal article, which consists in immersing the article in a bath of the molten aluminum-containing metal for a sufficient time to form a ferro-aluminum alloy film on the surface of the article at the interface between that surface and the molten aluminum-containing metal in contact therewith, forming between said alloyed surface film of said article and a mold spaced therefrom a layer of the aluminum-containing bath metal of the desired thickness without removing the same from the bath, simultaneously removing the article and mold and the intervening layer of aluminum-containing metal as a unit from the bath, and then cooling the same substantially to room temperature, whereby said layer is permanently bonded to said ferrous metal article through said ferro-aluminum alloy film.

MARSHALL G. WHITFIELD.

REFERENCES CITED

The following references are of record in the file of this patent:

UNITED STATES PATENTS

Number	Name	Date
2,156,998	McCullough	May 2, 1939
1,343,128	Halverson	June 8, 1920
1,332,975	Donaldson	Mar. 9, 1920
1,652,445	Lee	Dec. 13, 1927
2,157,453	Jaeger	May 9, 1939
851,684	Monnot	Apr. 30, 1907
853,716	Monnot	May 14, 1907
1,789,979	Jones et al.	Jan. 27, 1931
2,265,243	McCullough et al.	Dec. 9, 1941
960,328	Howard	June 7, 1910