(No Model.) 2 Sheets—Sheet 1.

L. HUSSEY & E. McCANN.

WASHER FOR EXHAUST STEAM.

No. 456,572. Patented July 28, 1891.

Fig. 1.

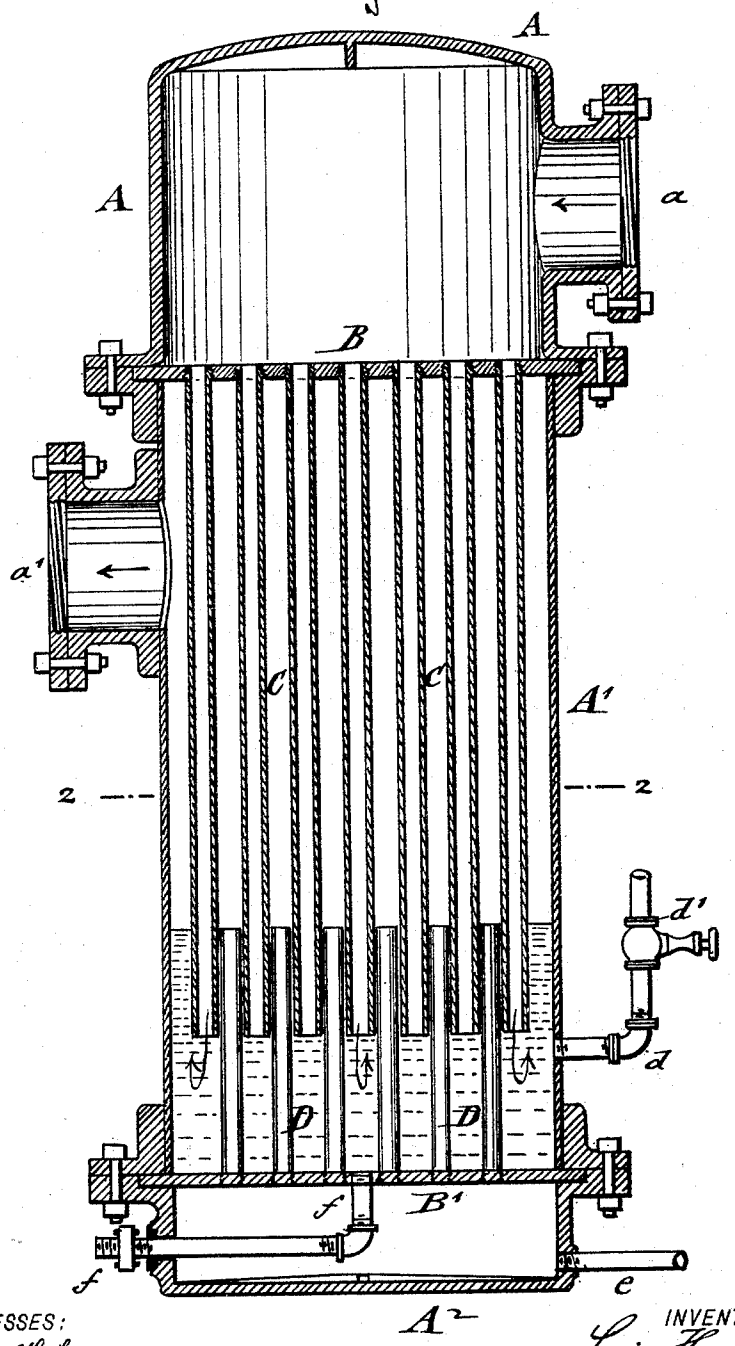

WITNESSES:

Henry Huber

W Reimherr

INVENTORS

Levi Hussey and

Edward McCann

BY

Goepel & Raegener

ATTORNEYS.

THE NORRIS PETERS CO., PHOTO-LITHO., WASHINGTON, D. C.

(No Model.) 2 Sheets—Sheet 2.

L. HUSSEY & E. McCANN.

WASHER FOR EXHAUST STEAM.

No. 456,572. Patented July 28, 1891.

Fig. 2.

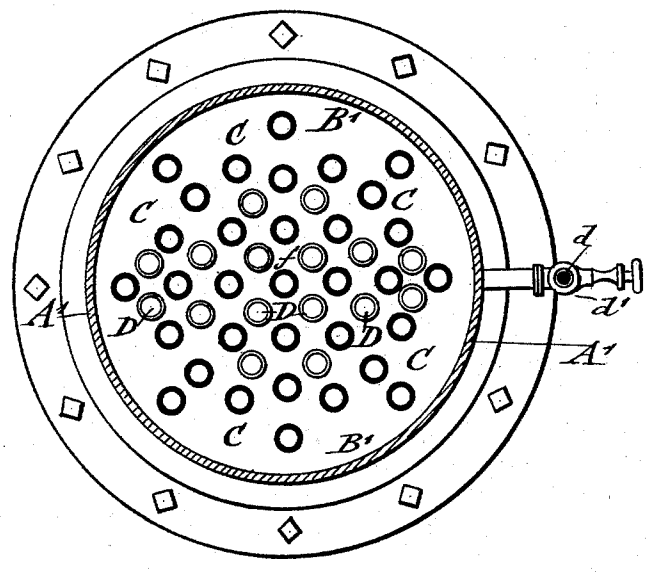

WITNESSES:
Henry Huber
W. Reinhem

INVENTORS
Levi Hussey and
Edward McCann
BY
Goepel & Raegener
ATTORNEYS

THE NORRIS PETERS CO., PHOTO-LITHO., WASHINGTON, D. C.

UNITED STATES PATENT OFFICE.

LEVI HUSSEY AND EDWARD McCANN, OF NEW YORK, N. Y.

WASHER FOR EXHAUST-STEAM.

SPECIFICATION forming part of Letters Patent No. 456,572, dated July 28, 1891.

Application filed November 7, 1890. Serial No. 370,614. (No model.)

To all whom it may concern:

Be it known that we, LEVI HUSSEY and EDWARD MCCANN, both of the city, county, and State of New York, and citizens of the United States, have invented certain new and useful Improvements in Washers for Exhaust-Steam, of which the following is a specification.

This invention relates to an improved washer or purifier for exhaust-steam, whereby the same can be cleaned of impurities that are still adhering to the same after it has passed through the separator in which the oil carried along by the exhaust-steam is collected, the action of the purifier on the exhaust-steam cleaning the same to such an extent that the water of condensation obtained from the same can be returned to the boiler without forming scales or other sediments thereon; and the invention consists of a washer or purifier for exhaust-steam, the casing of which consists of a top chamber or hood provided with a steam-inlet pipe, a middle chamber, and a bottom chamber, said middle chamber having a steam-outlet pipe. The middle chamber is separated from the top and bottom chambers by means of partition-plates, each of which carries a group of pipes that pass in opposite directions to and sidewise of each other, so that the ends of the longer downward-extending pipes are submerged to a certain depth in the water at the lower part of the middle chamber and cause the exhaust-steam to pass through the water. The sediments are drawn off from time to time by a drain-pipe connected with the bottom partition-plate, while any surplus water is drawn off from the bottom section by an overflow-pipe, as will be fully described hereinafter, and finally be pointed out in the claims.

In the accompanying drawings, Figure 1 represents a vertical longitudinal section of our improved washer or purifier for exhaust-steam, and Fig. 2 is a horizontal section on the line 2 2, Fig. 1.

Similar letters of reference indicate corresponding parts.

Referring to the drawings, A represents the top part or hood, A′ the middle part, and A^2 the bottom part, of the casing of our improved washer or purifier for exhaust-steam. The top part A is provided with a steam-inlet pipe *a*, which is connected with the exhaust-pipe of a steam-engine in any suitable manner. The middle part is provided near its upper part with a steam-outlet *a*′, which is connected with a conducting-pipe by a suitable coupling. The top and bottom parts are separated from the middle part by means of partition-plates B B′, which form with the top and bottom parts three chambers—a top chamber, a middle chamber, and a bottom chamber. The partition-plates B and B′ are provided with a number of threaded holes, into which are inserted, respectively, a group of pipes C and D. The pipes C, which are screwed into the top partition-plate B, are extended in downward direction past the upper ends of the pipes D, that are screwed into the bottom partition-plate B′, care being taken that the tubes of the upper partition-plate are not vertically in line with the pipes of the lower section, but parallel with and sidewise of the same. To the lower part of the middle chamber A′ is supplied hot water through a pipe *d*, having a stop-cock *d*′, until the water rises in the same up to the level of the upper ends of the lower group of pipes D, any surplus water being drawn off through the pipes D and conducted into the bottom chambers A^2, and from the same through an overflow-pipe *e* to the outside. Any sediments that are collected at the lower part of the middle portion A′ are drawn off from time to time by a drain-pipe *f*.

The operation of our improved washer or purifier for exhaust-steam is as follows: The steam, after having passed the separator, by which the oil and other impure articles are removed and collected, is conducted into the upper chamber or hood A, and then through the group or series of downwardly-extending pipes C into the heated water in the lower part of the middle chamber A′. The exhaust-steam impinges on the heated water in the lower part, so as to exert a lively ebullition in the same, and is then passed in upward direction through the same to the steam-outlet pipe, from which it is conducted off for further use. The hot water is either renewed from time to time by the supply-pipe *d* or continuously supplied by establishing a regular flow of hot water through the pipe *d*, the overflow being conducted off by

the overflow-pipe *e* in the bottom part A^2. The sediments which are collected at the bottom of the middle chamber, are drawn off through the drain-pipe *f*. The exhaust-steam is washed by its passage through the water in the middle chamber, and thereby purified from all impurities that are carried along by the same and conducted in a purified condition to the condenser or other place of use, the water of condensation obtained from the purified steam being reconducted to the boiler, and especially adapted for this purpose, as no scales or sediments are formed in the boiler.

Having thus described our invention, we claim as new and desire to secure by Letters Patent—

1. A washer or purifier for exhaust-steam, composed of a top chamber or hood having a steam-inlet, a middle chamber having a steam-outlet, and a bottom chamber, partition-plates between the middle chamber and the top and bottom chambers, a group of pipes extending from the top partition-plate in downward direction, and a second group of pipes that extend in upward direction parallel with and to some distance above the lower ends of the downwardly-extending pipes, so that the exhaust-steam is compelled to pass through a body of water in the middle chamber, so as to be washed or purified thereby, substantially as set forth.

2. A washer or purifier for exhaust-steam, composed of a top chamber or hood provided with a steam-inlet, a middle chamber provided with a steam-outlet and a water-supply pipe, and a bottom chamber provided with an overflow-pipe, partition-plates between the middle chamber and the top and bottom chambers, a group of pipes extending from the upper partition in downward direction, and a group of overflow-pipes extending from the bottom partition in upward direction sidewise of and parallel with the upper pipes, substantially as set forth.

3. A washer or purifier for exhaust-steam, consisting of a top chamber having a steam-inlet, a middle chamber having a steam-outlet, a water-supply pipe, and a bottom drain-pipe, and a bottom chamber having an overflow-pipe, partition-plates between the middle chamber and the top and bottom chambers, a group of pipes extending from the top partition-plate in downward direction, and a group of pipes extending from the bottom partition-plate in upward direction, the downwardly-extending group of pipes extending sidewise of and below the upper ends of the lower group of pipes, substantially as set forth.

In testimony that we claim the foregoing as our invention, we have signed our names in presence of two subscribing witnesses.

LEVI HUSSEY.
EDWARD McCANN.

Witnesses:
PAUL GOEPEL,
MARTIN PETRY.