Aug. 24, 1937. C. L. MCORMAN 2,091,157

NONSKID PLATE

Filed June 25, 1936

Fig. 1.

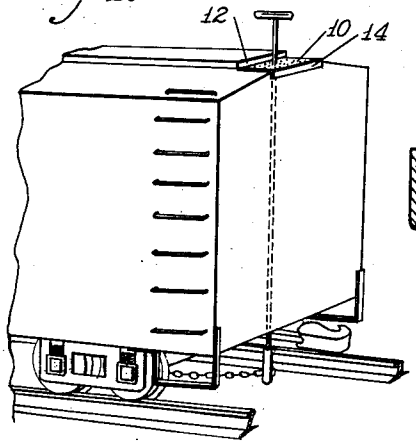

Fig. 2.

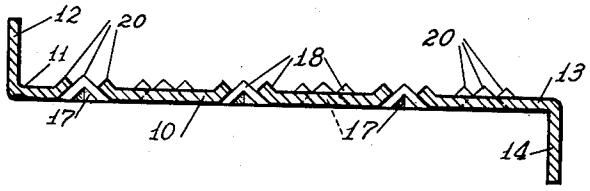

Fig. 3.

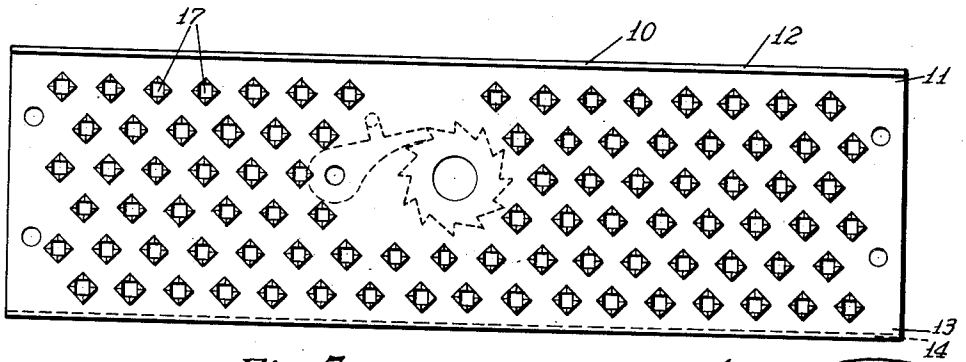

Fig. 6.

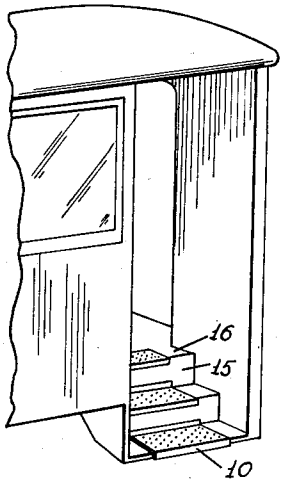

Fig. 5.

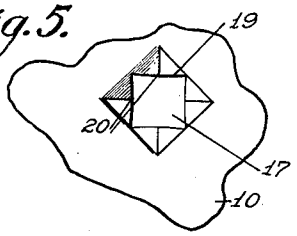

Fig. 4.

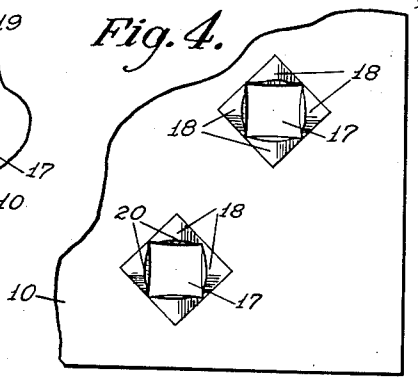

INVENTOR.
Charles L. Moorman
BY Clarence E. Threedy
HIS ATTORNEY.

Patented Aug. 24, 1937 2,091,157

UNITED STATES PATENT OFFICE

2,091,157

NONSKID PLATE

Charles L. Moorman, Blue Island, Ill.

Application June 25, 1936, Serial No. 87,191

4 Claims. (Cl. 94—5)

This invention relates to certain novel improvements in a non-skid plate, and has for its principal object the provision of an improved construction of this character which will be highly efficient in use and economical in manufacture.

I am aware of the fact that prior to my invention non-skid plates have been constructed for use on vehicle steps, sidewalks and the like, and that these plates in order to function for the intended purpose are provided with raised elements sharpened to have abrasive engagement with the shoe of the wearer for the purpose of preventing slipping or the like. These plates which I speak of are designed with the non-skidding element so constructed as to prevent slipping or skidding in one direction. Usually these non-skidding elements raised from the body of the plate prevent the foot from slipping in the forward movement of the walker, but nothing is provided for preventing side or backward slipping or skidding.

It is, therefore, one of the many objects of this invention to provide a non-skid plate whereby the non-skid elements are so constructed as to prevent slipping or skidding in any direction over its area.

Other objects will appear hereinafter.

The invention consists in the novel combination and arrangement of parts to be hereinafter described and claimed.

The invention will be best understood by reference to the accompanying drawing showing the preferred form of construction, and in which:

Fig. 1 is a fragmentary perspective view of a freight car illustrating the invention associated therewith;

Fig. 2 is a cross-sectional detail view of the invention;

Fig. 3 is a top plan view of the same;

Fig. 4 is an enlarged fragmentary plan view of the invention illustrated in Fig. 3;

Fig. 5 is a fragmentary sectional bottom plan view of the invention illustrated in Fig. 3; and

Fig. 6 is a fragmentary perspective view of a vehicle illustrating the invention associated therewith.

In the drawing I have illustrated two specific applications of the non-skid plate embodying the present invention. I do not intend to limit myself to these two specific uses, but have illustrated those specific uses for the purpose of a clearer understanding of the invention.

Referring to the drawing, more particularly to Figs. 2 to 4 inclusive, illustrating the preferred form of construction, the non-skid plate embodying my invention includes an elongated body 10 having at one longitudinal edge portion 11 an upturned flange 12, and at the opposite longitudinal edge portion 13 a depending flange 14. The flanges 12 and 14 each serve to snugly engage the stationary object or wall portion with which the plate is associated, and the flange 12 may serve as a protective member for the rise 15 of a step 16.

Formed in the body 10 are a plurality of openings 17, and the material surrounding these openings 17 is struck upwardly to provide radially disposed non-skid elements 18. These elements 18 are in the present instance, when struck up from the body 10, each substantially in the form of a triangle, with the sides 19 of the triangles thus formed disposed in opposing relation with respect to each other, thus providing non-skidding points 20 disposed concentrically about the opening 17. These non-skidding points 20 being disposed concentrically about each of the openings 17 and being the highest point of the material thus struck from the body 10, will engage the sole of the shoe and prevent skidding or slipping in any direction relative to the body 10.

In the manufacture of the plate disclosed herein, a number of square holes are first made in the plate member and thereafter a die having a four-sided tapered head of substantially pyramidal form is pressed into the square hole with the edges of the die disposed substantially at the midpoints of the sides of the square so that when the die or dies are driven home, the body portions of the plate around the sides of the squares are struck up in the form seen in Figs. 3, 4 and 5. Thus, if it were not for the square openings, the die might be said to strike up or extrude portions of the plate which would be pyramidal in shape. By providing the square holes first and then extruding the surrounding body material, the peculiar formation shown is achieved, which results in an excellent non-skid surface.

In Fig. 1, I have illustrated the non-skid plate embodying my invention as associated with a freight car, whereas in Fig. 6, I have shown the non-skid plate as associated with the steps of a vehicle. The non-skid plate is economical in manufacture and positive in its function to prevent skidding or slipping in any direction over the surface of the body 10.

While I have illustrated and described the preferred form of construction for carrying my invention into effect, this is capable of variation

and modification without departing from the spirit of the invention. I, therefore, do not wish to be limited to the precise details of construction set forth, but desire to avail myself of such variations and modifications as come within the scope of the appended claims.

Having thus described my invention, what I claim as new and desire to protect by Letters Patent is:

1. A tread plate comprising a body having a plurality of struck up portions whose outer boundaries define a square and whose inner boundaries define in plan view, a square aperture, the corners of which are located at the midpoints of the sides of the outer square.

2. A tread plate comprising a body having a plurality of square openings formed therein, the body portions along each side of said squares being struck up to provide two substantially triangular and adjoining surfaces at each of the sides of the squares.

3. A tread plate in the form of a body having a plurality of square openings formed therein, each having a square area of the plate around the holes struck up with the corners of the holes situated substantially at the midpoints of the square areas.

4. A tread plate comprising a body having a plurality of square openings formed therein and body portions struck up around said openings in polyhedral form with the corners of said square located substantially at midpoints of the sides of the polyhedron.

CHARLES L. MOORMAN.