(12) INTERNATIONAL APPLICATION PUBLISHED UNDER THE PATENT COOPERATION TREATY (PCT)

(19) World Intellectual Property Organization
International Bureau

(43) International Publication Date
4 December 2008 (04.12.2008)

PCT

(10) International Publication Number
WO 2008/146255 A2

(51) **International Patent Classification:**
A61N ***5/00*** (2006.01)

(21) **International Application Number:**
PCT/IB2008/0521 12

(22) International Filing Date: 30 May 2008 (30.05.2008)

(25) Filing Language: Italian

(26) Publication Language: English

(30) Priority Data:
2007120445 1 Iune 2007 (01.06.2007) RU

(71) **Applicant and**
(72) Inventor: GIULINI, Gabriele [IT/IT]; Via Soresina 5, 1-20144 Milano (IT).

(72) Inventors; and
(75) Inventors/Applicants *(for US only):* **KARANDASHOV, Vladimir Ivanovich** [RU/RU]; ul. Bobruiskaya, 10-3-68, Moscow, 121351 (RU). **TIUKOV, Viktor Aleksieievich** [RU/RU]; ul. Kuhmisterova, 18-168, Moscow, 109388 (RU).

(74) Agents: FAGGIONI, Marco et al.; Via S. Agnese 12, 1-20123 Milano (IT).

(81) **Designated States** *(unless otherwise indicated, for every kind of national protection available):* AE, AG, AL, AM, AO, AT, AU, AZ, BA, **BB,** BG, **BH, BR,** BW, BY, BZ, CA, CH, CN, CO, CR, CU, CZ, DE, **DK,** DM, DO, DZ, EC, EE, EG, ES, FI, GB, GD, GE, GH, GM, GT, HN, **HR,** HU, **ID, IL,** IN, **IS, JP,** KE, KG, KM, KN, **KP, KR,** KZ, LA, LC, LK, LR, LS, LT, LU, LY, MA, MD, ME, MG, MK, MN, MW, MX, MY, MZ, NA, NG, NI, NO, NZ, OM, PG, **PH,** PL, PT, **RO,** RS, RU, SC, SD, SE, SG, SK, SL, SM, SV, SY, **TJ,** TM, TN, TR, TT, TZ, UA, UG, US, UZ, VC, VN, ZA, ZM, ZW

(84) **Designated States** *(unless otherwise indicated, for every kind of regional protection available):* ARIPO (BW, GH, GM, KE, LS, MW, MZ, NA, SD, SL, SZ, TZ, UG, ZM, ZW), Eurasian (AM, AZ, BY, KG, KZ, MD, RU, TJ, TM), European (AT, BE, BG, CH, CY, CZ, DE, DK, EE, ES, FI,

[Continued on next page]

(54) Title: PORTABLE DEVICE FOR THE EMISSION OF BLUE-COLOURED LIGHT

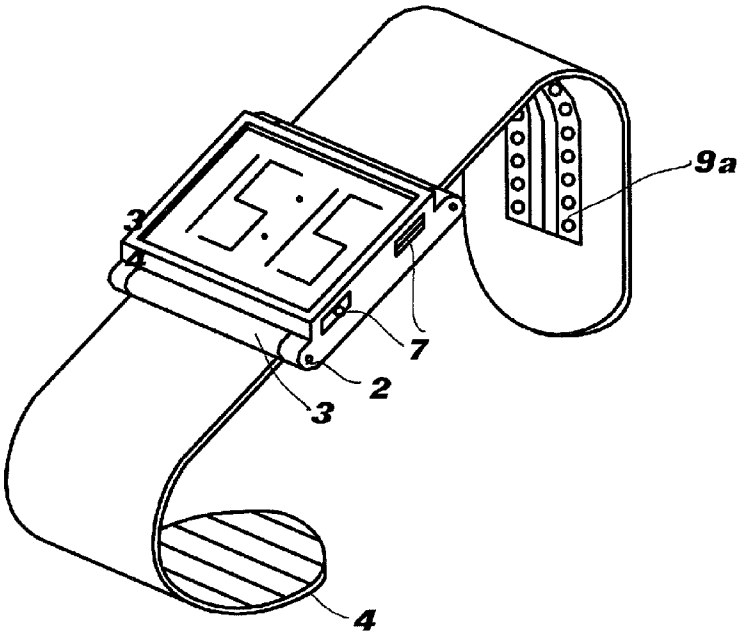

Fig. 3

(57) Abstract: A portable device for the emission of blue light for the therapeutic use in the human body is disclosed, consisting of a box body (1) and of an armband (4) in engagement with said body 1. In said body (1) a device control microprocessor (6) and a respective battery supply unit (5) are housed. Said armband (4) is provided, in the surface thereof in contact with the skin, with at least one blue light-emitting-diode (LED) (9) matrix powered by said battery unit (5) and controlled by said microprocessor (6). Moreover, said armband is provided with fastening means in contact with a naked part of the human body.

WO 2008/146255 A2

FR, GB, GR, **HR,** HU, IE, IS, IT, LT, LU, LV, MC, MT, NL, NO, PL, PT, RO, SE, SI, SK, TR), OAPI (BF, BJ, CF, CG, CI, CM, GA, GN, GQ, GW, ML, MR, NE, SN, TD, TG).

Published:

— *without international search report and to be republished upon receipt of that report*

TRANSLATION (RULE 12.3) 01 Jul y 2008

"PORTABLE DEVICE FOR THE EMISSION OF BLUE LIGHT"

* § * § * § *

The present invention refers to a portable device for the emission of blue light, in particular a portable device prearranged for use on a human limb.

The practice of phototherapy has been known since very ancient times: sunlight was widely employed by Hippocrates, Antyllus, Galen e Avicenna for the treatment of skin disorders, rickets, obesity, cachexia, poliarthritis, jaundice, gout, asthma, epilepsy and varicose ulcers.

The discovery, in the 19th century, of the sources of artificial light generated interest in the reactions triggered by light in plants, animals and humans. In particular, the application of beams of light for medical purposes has been studied and developed. Already in 1895, Finsen used an intense blue-violet radiation for treating various disorders, such as bone tuberculosis, trophic ulcers in the lower limbs, alopecia, acne vulgaris, exudative pleurisy, phthisis, neuralgia and arthritis .

With the development of more sophisticated optical instruments, such as monochromators and spectrometers, research into the biological effects of blue light gained new momentum. It was thus realised that blue light acts on the control of some organules which regulate the development and life processes of cells. By studying the regulating action of blue light on cormophytes, it was possible to define the complex mechanism boosting light-regulating responses, which induces significant biological responses employing minimal amounts of pigments and of light.

It has thereby been detected that blue light energy, absorbed by the pigment, stimulates the intramolecular restructuring thereof. The subsequent reaction of the thus-modified pigment with surrounding macromolecules causes an alteration of the metabolic processes. An analysis of the biochemical composition of animal cells reveals instead that a very large number of the structures thereof absorb blue light; in particular mitochondria, the "power plants" of cells, are

extremely sensitive to blue light and absorption of the quanti thereof stimulates energy synthesis.

After having detected by means of blood spectrophotometry that some blood fractions, such as haemoglobin, bilirubin and protoporphyrin, have a great absorption power in the blue spectrum band, studies have concentrated on the effects that electromagnetic radiation of the blue spectrum area generates in living organisms, in particular in humans, and on the ways to make this discovery clinically useful for humans. It has thereby been realised that blue light has a series of positive effects, in particular on the circulatory system, on the nervous system and on the immune system.

In the light of these discoveries, research was aimed at finding the various types of clinical therapy capable of carrying out direct irradiation of the body or of an organ with blue light: for a blue-light radiation session to be effective, duration may vary from 3 minutes to a few hours, depending on the disorder to be treated. Known systems provide to irradiate blood with blue light, or to draw blood from the patient and subsequently reintroduce it, or to introduce an irradiating probe in the venous circle, or to irradiate the patient's skin.

In this last case, various methodologies exist, which nevertheless necessarily provide the presence of a source of light which - by means of suitable devices - emits a beam of light having the desired wavelength. In addition to more conventional systems, use has recently been made also of sources of laser radiation emitting monochromatic light. In order to meet the requirements set for individual disorders, devices have been manufactured having characteristics specifically aimed to such requirements. For example, for vascular diseases of the lower limbs a small blue-light foot-bath tub has been designed, wherein the light radiation is emitted by LEDs mounted in the tub walls .

All the devices exemplifyingly described above, however, have a certain complexity and bulk and hence have the evident disadvantage of being able to be used exclusively in medical surgeries, or other set locations. Therefore, the patient is

forced to spend a fraction of his or her time, which may be up to a few hours, in a specifically-equipped, enclosed environment, often little hospitable, to undergo treatment.

Such disadvantage is very remarkable in the cases in which the curative treatment provides a number of sessions in a relatively short amount of time, and consequently causes significant inconvenience in the daily organisation of tasks. Moreover, the presence of medical control personnel is necessarily required for defining ways and times of irradiation case by case for each individual patient, with resulting management costs which make the treatment less attractive for the patient.

In order to eliminate the presence of the operator and of the machine, devices for light radiation transmission have been released onto the market whereto a timer, on/off and radiation power indicators are associated, as well as sound alarms or warning lights which signal the beginning and the end of the treatment. These are hence apparatuses which may be used also at the patient's premises, based on a "prescription" written by the general practitioner concerning times and doses of irradiation.

Also, this type of machine, however, needs to supply the patient at least with basic notions for managing the apparatus, and especially that in any case the treatment occurs in a defined and enclosed space, wherein the patient must be confined for the whole duration of the treatment.

The object of the present invention is therefore that of providing an extracutaneous blood irradiation device with blue light which is free from the drawbacks reported above and, in particular, which does not force the patient to suspend his activities to undergo treatment, thereby remarkably boosting the opportunity for diffusion of this very useful therapy.

Said object is achieved by means of an irradiation device having the features defined in the accompanying main claim. The dependent claims concern some additional features of the device of the invention.

The features and advantages of such device will be better illustrated in the following detailed description of some

preferred embodiments of the same, provided merely as an example, with reference to the accompanying drawings, wherein:

fig. 1 is a view with parts removed of a first embodiment of the portable device, in rear view, for the irradiation with blue light of the present invention;

fig. 2 is a perspective view of the front portion of the device of fig. 1;

fig. 3 is a perspective view of a second embodiment of the present invention.

The device according to the invention consists of a box body 1 whereto - through suitable fittings, such as spring pins 2 - the eyelet ends 3 of an armband 4 are fastened.

Box body 1, which houses the system controlling the device, comprises inside an independent power supply 5, such as a conventional battery, and a microprocessor 6 for device management. Along the edge of body 1, one or more buttons 7 are provided for device actuation and for microprocessor programming. A socket 8 is furthermore provided for the introduction of the plug of a recharging device of power supply 5 from the outer network.

The armband, which may use any one system for fastening to the patient's wrist, provides in its surface in contact with the skin a blue light-emitting-diode (LED) 9 matrix , preferably of the ultra-light colour type. In order to reduce the risk of localised skin overheating, in the intervals between diodes 9, respective metal heat dissipators of the cooler type are introduced. Moreover, for the purpose of making more pleasant to the touch the use of such an armband, it is preferred to arrange a thin, clear latex film on the inner surface thereof.

In the proximity of the eyelets, connection plugs are provided on the armband for the supply of electric power to diodes 9; correspondingly, the relevant sockets are provided on the box body. Preferably, such connections are of the USB type for connection.

In its alternative embodiments, the invention provides that some components may be added to the main structure of the device, described so far in connection with a first embodiment:

said components do not interfere in any way with the main device, but make more pleasant or practical the use thereof. A double matrix of coupled and parallel diodes 9a, instead of a single matrix, may also be provided (fig. 3) for guaranteeing more safety during treatment, in the eyes of the patient.

Using well-tested miniaturisation techniques, which allow to insert circuitries of any kind into very small areas, and with very modest costs and consumptions, it is possible to provide an armband with the features reported above which has in addition a watch (fig. 3) on the upper surface thereof.

At the same time it is possible to associate other applications (not shown) with the device of the present invention, such as radio receivers, or music reproduction units, as well as to equip the armband with aesthetic or decorative elements which make the use and diffusion thereof also as fashion objects more pleasant.

Finally, it must be underlined that the term *armband,* used so far, must be considered in its widest meaning: as a matter of fact, it is possible to manufacture a device according to the invention to be applied to any part of the body which is practical, aesthetically appealing or suitable for a specific treatment, and where there is sufficient surface blood circulation, such as for example to the wrists, the ankles, the neck.

From the preceding description it appears in an evident way that the device according to the invention is characterised by great construction simplicity, wide versatility of use and is furthermore portable by the patient in a non-invasive way, since it does not have an appearance which may be identified with a treatment device, rather than with one of the many elements for decorating the body today so widespread. Such device hence fully meets the set object of the invention.

It can be understood, from the description given so far, that a number of changes, variants and improvements may be made to the device of the invention, all within the obvious reach of a person skilled in the field who may have to suggest the use thereof for specific applications, without departing from the

scope of protection of the invention, which is defined solely by the attached claims.

CLAIMS

1) Portable device for the emission of blue light for therapeutic use in the human body, characterised in that it consists of a box body (1), wherein a device control microprocessor (6) and a respective battery supply unit (5) are housed, as well as an armband (4) engaged with said box body (1) and equipped - in the surface thereof in contact with the skin - with at least one blue light-emitting diode (LED) (9) matrix powered by said battery unit (5) and controlled by said microprocessor (6), said armband being provided with fastening means in contact with a naked part of the human body.

2) Device as claimed in claim 1), wherein on an edge of the box body (1) there are provided one or more buttons (7) for the actuation of the device and for the programming of the microprocessor (6), as well as a socket (8) for the introduction of recharging devices of the supply (5) from the outside network .

3) Device as claimed in claim 2), wherein the engagement between said box body (1) and said armband (4) occurs by means of eyelets (3) found at the ends of said armband (4) and pins (2) of engagement with said box body (1) .

4) Device as claimed in claim 3), wherein on said box body (1) and on said armband (4) there are provided means for the mutual connection of the electric power supply from the battery unit (5) to the LEDs (9) .

5) Device as claimed in any one of the claims from 1) to 4), wherein said LEDs (9) are of the ultra- light colour type.

6) Device as claimed in any one of the claims from 1) to 5), wherein between adjacent diodes (9) of said LED matrix there are provided metal heat dissipators of the cooler type.

7) Device as claimed in any one of the claims from 1) to 5), wherein a thin film of clear latex is applied on the above-said LED matrix in contact with the skin.

8) Device as claimed in any one of the preceding claims, wherein said LED diode matrixes are two (9a), mutually coupled and parallel .

9) Device as claimed in any one of the preceding claims,

wherein other utility applications, such as a watch, a radio or a music reproduction unit are associated with said microprocessor (6).

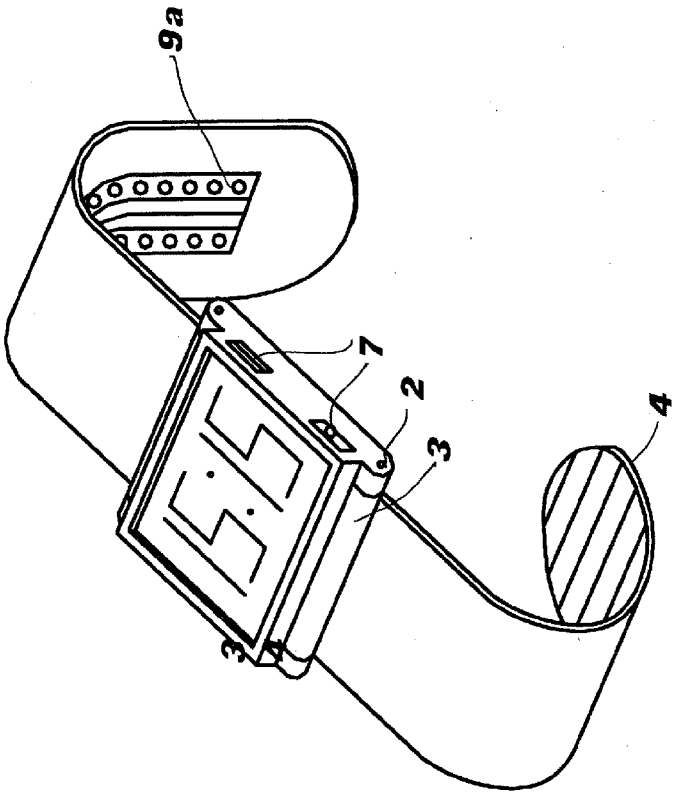

Fig. 3

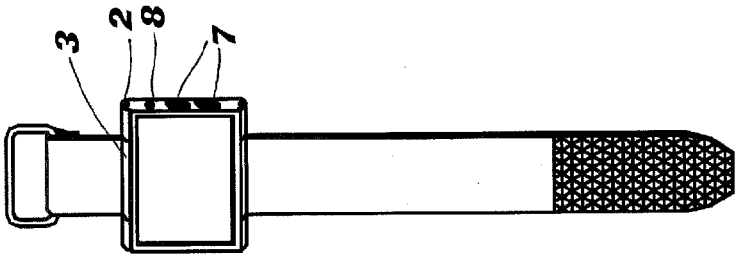

Fig. 2

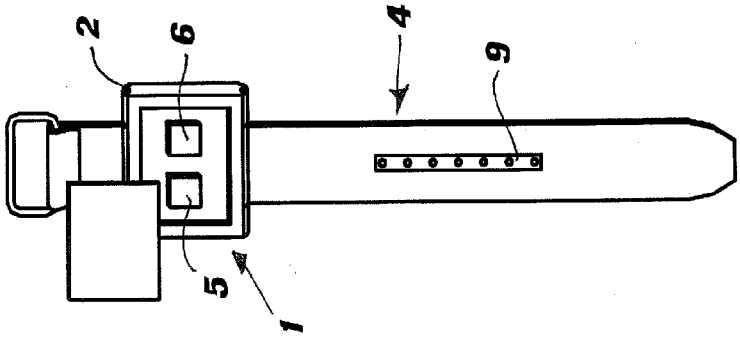

Fig. 1