A. I. THOMAS.

GRATELESS FURNACE AND FORCE DRAFT FOR THE SAME.

APPLICATION FILED AUG. 19, 1920.

1,410,141. **Patented Mar. 21, 1922.**

2 SHEETS—SHEET 1.

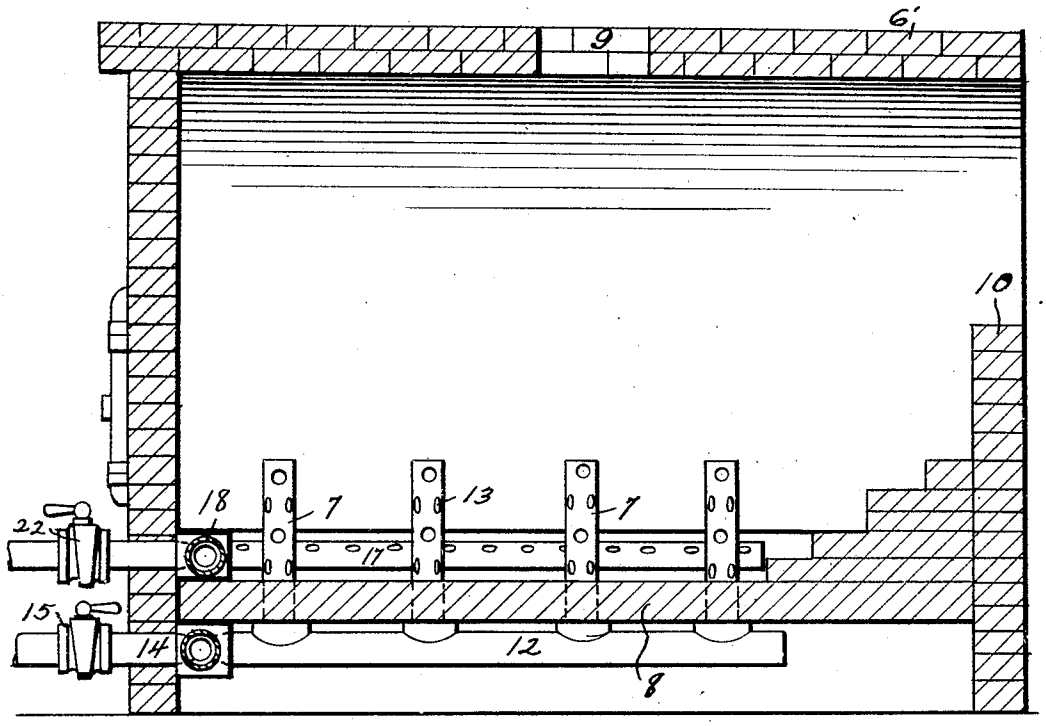

Fig. 1.

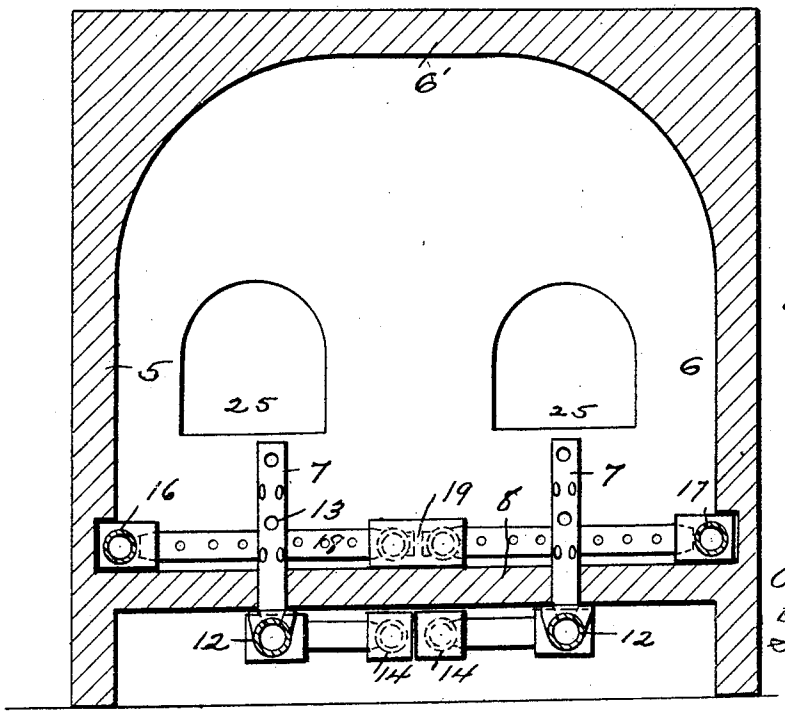

Fig. 2.

INVENTOR.
A. I. Thomas
By Shepherd & Campbell
ATTORNEYS

A. I. THOMAS.

GRATELESS FURNACE AND FORCE DRAFT FOR THE SAME.

APPLICATION FILED AUG. 19, 1920.

1,410,141. Patented Mar. 21, 1922.

2 SHEETS—SHEET 2.

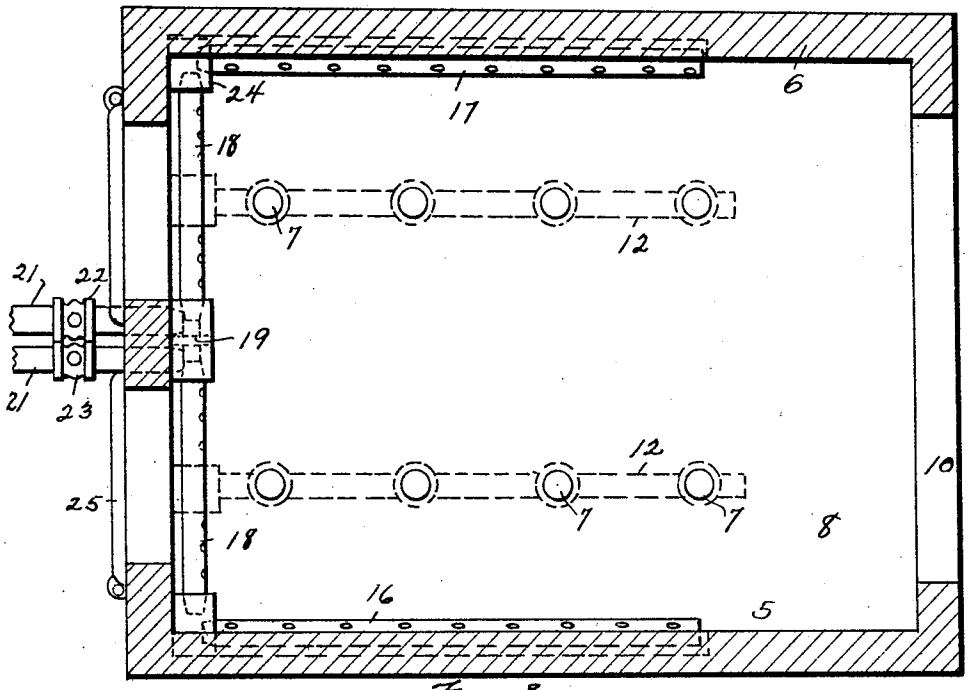

Fig. 3.

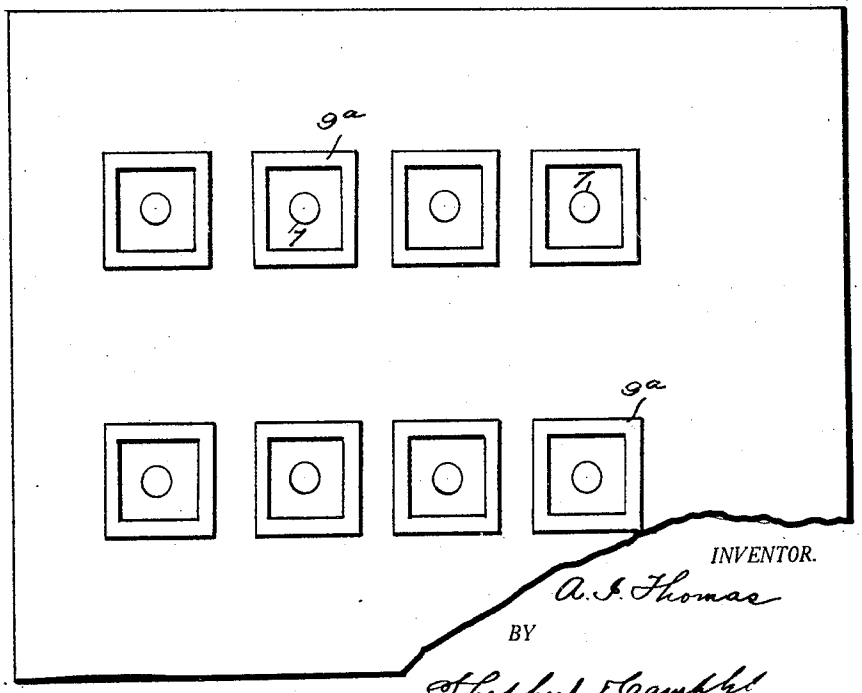

Fig. 4.

INVENTOR.

A. I. Thomas

BY

Shepherd & Campbell

ATTORNEYS

UNITED STATES PATENT OFFICE.

ALONZO I. THOMAS, OF DALLAS, OREGON.

GRATELESS FURNACE AND FORCE DRAFT FOR THE SAME.

1,410,141. Specification of Letters Patent. Patented Mar. 21, 1922.

Application filed August 19, 1920. Serial No. 404,708.

To all whom it may concern:

Be it known that I, ALONZO I. THOMAS, a citizen of the United States, residing at Dallas, in the county of Polk and State of Oregon, have invented certain new and useful Improvements in Grateless Furnaces and Force Drafts for the Same, of which the following is a specification, reference being had therein to the accompanying drawings.

This invention relates to furnaces and more particularly to a force draft construction for a furnace adapted to burn saw dust or other fine, or wet or partly wet fuel.

It is a primary object of the invention to provide a furnace in which grate bars may be entirely eliminated. The upkeep of the grate bars constitutes the greatest item of expense in connection with the maintenance of furnaces. In the Dutch oven furnace, which is used in a great number and indeed in the majority of mills and wood working factories, the furnace is built in front of the boiler and the fuel is fed into the furnace and the heat is carried back over the bridge wall and into the boiler. This fuel, usually consisting of saw dust, piles up in a large mound directly under the stoke hole, sometimes to a depth of four feet. Thus the greater part of the draft is around the edges of the fuel and all the pile of hot fuel is supported by the grate bars. These grate bars become so hot that the weight of the fuel bends them down or expands them out of shape, so that frequent replacement of the grate bars becomes necessary. Furthermore, very little air can get through the grate bars in the center of the fire, with natural draft, because of the extreme depth of the fuel.

According to the present invention the grate bars are taken out entirely and the bottom of the combustion chamber consists of a solid floor of brick, preferably fire brick. Perforated air pipes are disposed to extend around three sides of the fire box and in addition perforated headers extend through the floor of the combustion chamber and thus dispose in the mass of fuel, at a large number of points, means for introducing a blast of air directly to the heart of the mass of fuel. This not only results in eliminating grate bars but it renders it possible to control the draft in such a way as to get the most effective results. In furnaces of ordinary construction, where wet or green fuel is used, or the atmosphere is improper for good combustion, proper results cannot be secured. With the forced draft mechanism herein shown and described the draft may be regulated to a nicety and just the amount of air may be supplied to secure the best results.

Further objects and advantages of the invention will be set forth in the detailed description which now follows.

In the accompanying drawings:

Figure 1 is a longitudinal sectional view of a furnace constructed in accordance with the invention;

Fig. 2 is a transverse, vertical section therethrough.

Fig. 3 is a horizontal section; and

Fig. 4 is a plan view of the combustion chamber illustrating a slightly modified form of the device.

Like numerals designate corresponding parts throughout the several figures of the drawing.

In the drawing the numerals 5 and 6 designate the side walls of the fire box or combustion chamber of my improved furnace and 6′ designates the top thereof. The floor or bottom of the combustion chamber is solid and imperforate except where headers 7 project therethrough. This floor, 8, takes the place of the usual grate bars and supports the fuel introduced through a stoke hole 9. The products of combustion pass rearwardly over a bridge wall 10 in the manner common in furnaces of this type. The headers 7 project upwardly from lead pipes 12 that are horizontally disposed beneath the floor 8. These headers are perforated at varying points in their height and at varying points in their diameters, as indicated at 13. The pipes 12 are connected to independent supply pipes 14, each of which has a controlling valve 15 therein. Thus more air may be supplied to the headers at one side of the furnace than at the other, if the condition of the fire demands it.

Perforated air supply pipes 16, 17 and 18 are disposed along the sides of the combustion chamber and the pipe 18 is divided by a blind flange 19, the space upon each side of which is separately supplied with air through supply pipes 20 and 21, having individual controlling valves 22 and 23 therein, so that more air may be supplied to the pipe 16 than to the pipe 17 and vice versa if the condition of the fire demands it. The several pipes are united by fittings 24 with which the pipes have a driving fit. In other words the pipes are not threaded

but are tapered to engage in the fittings 24. In like manner the headers are engaged with pipes 12. Thus it is only necessary to strike these pipes a few blows with a hammer in order to loosen and remove them, if they are burned out and it becomes necessary to replace them.

In the modified form of the invention illustrated in Fig. 4, I have shown a plurality of stoke holes 9[a] in the top of the furnace, one above each of the headers. This renders it possible to deposit the fuel in such manner that each header will be the center of a mass of the fuel. Furthermore, this aids in eliminating the necessity for some stoking, or manipulation of the fire through the doors 25 in the front of the furnace.

It is to be understood that the invention is not limited to the precise construction set forth. It may be used in furnaces of other types than those herein shown and described and it includes within its purview whatever changes fairly come within either the terms or the spirit of the appended claims.

Having described my invention, what I claim is:

1. A device of the character described comprising a combustion chamber having a solid bottom, a perforated pipe extending across the front of the furnace, perforated pipes extending along each side of the furnace, the perforated pipe extending across the front of the furnace being divided into two parts, connections between the ends of said two parts and the perforated pipes which extend along the sides of the furnace, individual air supply pipes for the two parts of said divided pipe, individual controlling valves for each of said supply pipes, a pair of lead pipes extending longitudinally beneath the bottom of the furnace and upon opposite sides of the center thereof, individual air supply pipe for said lead pipe, individual controlling valves in the last named supply pipe and a plurality of headers upstanding from each of the lead pipes and projecting through the bottom of the furnace and perforated above the bottom of the furnace for the passage of air.

2. A structure as recited in claim 1 wherein the said pipes are united to each other by drive joints.

In testimony whereof I hereunto affix my signature.

ALONZO I. THOMAS.