US006127909A

United States Patent [19]

Vix

[11] **Patent Number: 6,127,909**

[45] **Date of Patent: Oct. 3, 2000**

[54] **BREAKER MECHANISM FOR AN ELECTRIC CIRCUIT-BREAKER**

[75] Inventor: **Martin Vix**, Schenkon, Switzerland

[73] Assignee: **Schurter AG**, Lucerne, Switzerland

[21] Appl. No.: **09/306,893**

[22] Filed: **May 7, 1999**

[30] **Foreign Application Priority Data**

May 8, 1998 [CH] Switzerland 1042/98

[51] **Int. Cl.**[7] **H01H 3/00**

[52] **U.S. Cl.** **335/185**; 335/189

[58] **Field of Search** 335/8–10, 23–35, 335/155, 167–176, 189–196; 200/336, 400

[56] **References Cited**

U.S. PATENT DOCUMENTS

2,131,800	10/1938	Frank	335/20
3,406,360	10/1968	Simons	335/16
3,752,947	8/1973	Strobel .	
4,048,599	9/1977	Groth	335/20
5,500,630	3/1996	Edwards, Jr. et al.	335/132
5,933,065	8/1999	Duchemin	335/190

FOREIGN PATENT DOCUMENTS

0 703 592	3/1996	European Pat. Off. .

Primary Examiner—Lincoln Donovan
Attorney, Agent, or Firm—Morgan, Lewis & Bockius LLP

[57] **ABSTRACT**

The breaker mechanism **(6)** has a position to either side of a zero position and is distinguished in that it has a minimum number of few parts, and that it can be assembled from only one direction. This ensures a trip-free mechanism. Conversely, switching on is impossible when the breaker mechanism **(6)** is unlatched. The breaker mechanism **(6)** has an intermediate piece **(15)** that is assigned an alternating function in reference to the two positions. Together with a rotary handle **(12)**, it forms a toggle lever joint with two effective ends.

12 Claims, 7 Drawing Sheets

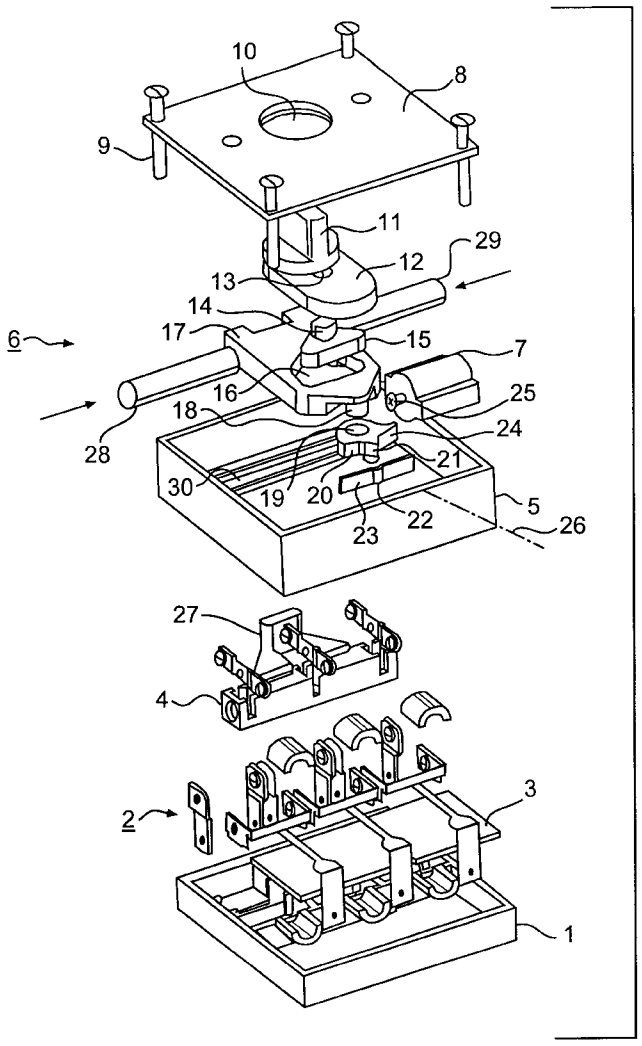

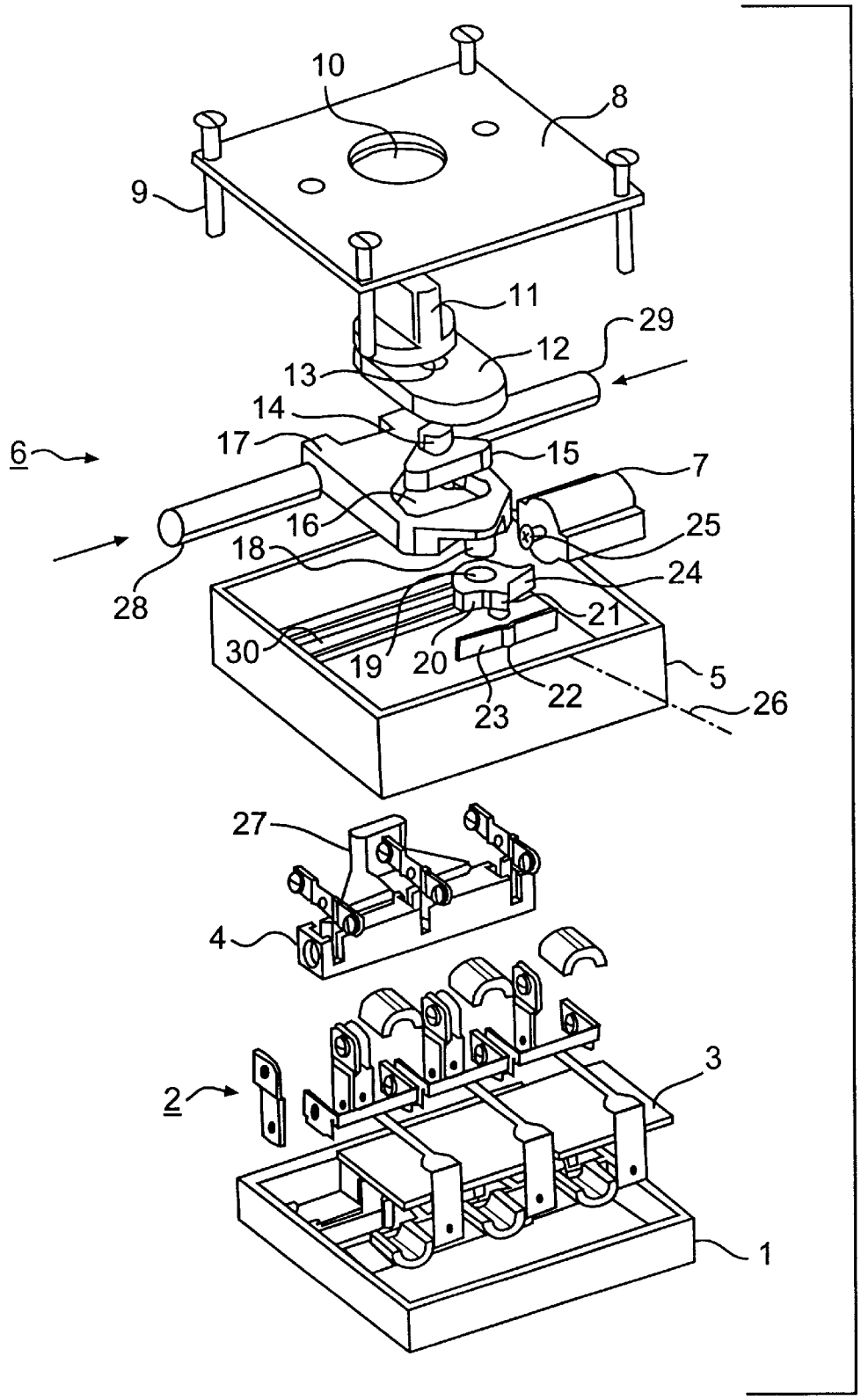
10
8
9
11
29
12
13
14
6
17
15
7
16
25
18
24
28
21
30
19
20
5
22
26
23
27
4
3
2
1

FIG.1

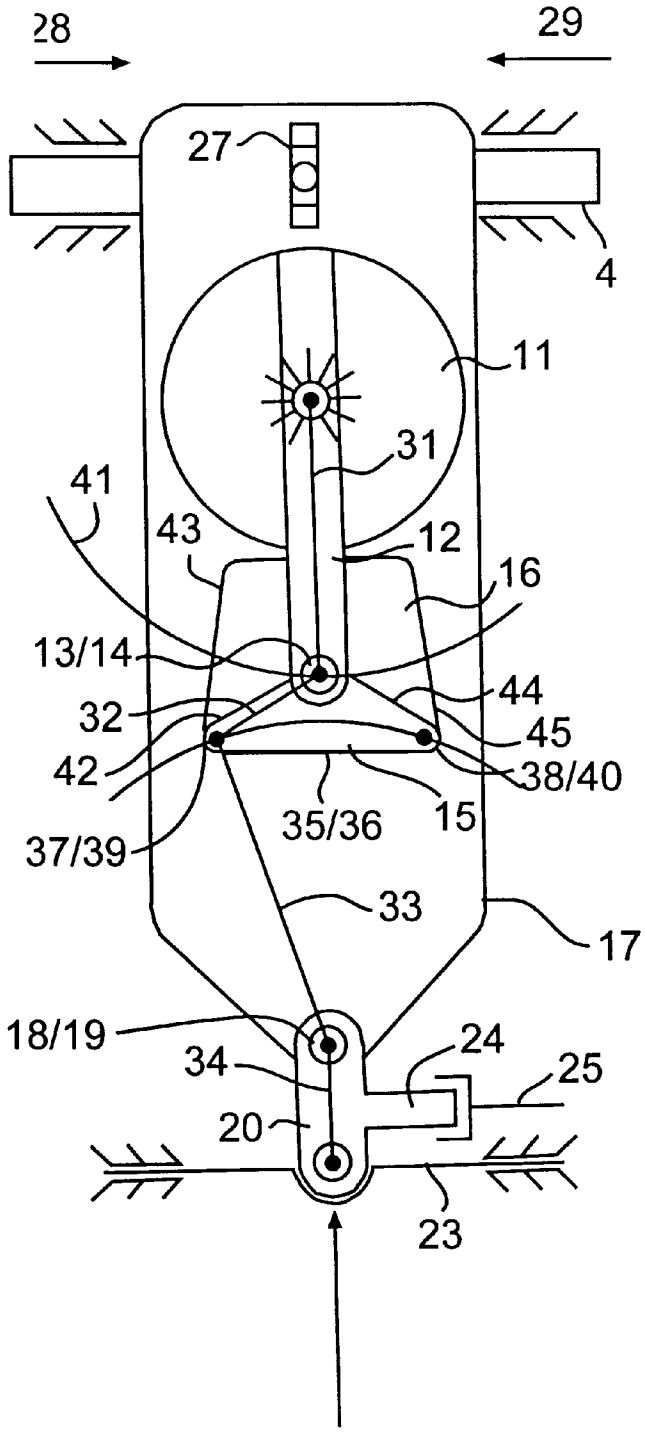
28
29
27
4
11
31
41
43
12
16
13/14
44
32
45
42
38/40
35/36
15
37/39
33
17
18/19
24
34
25
20
23

FIG. 2

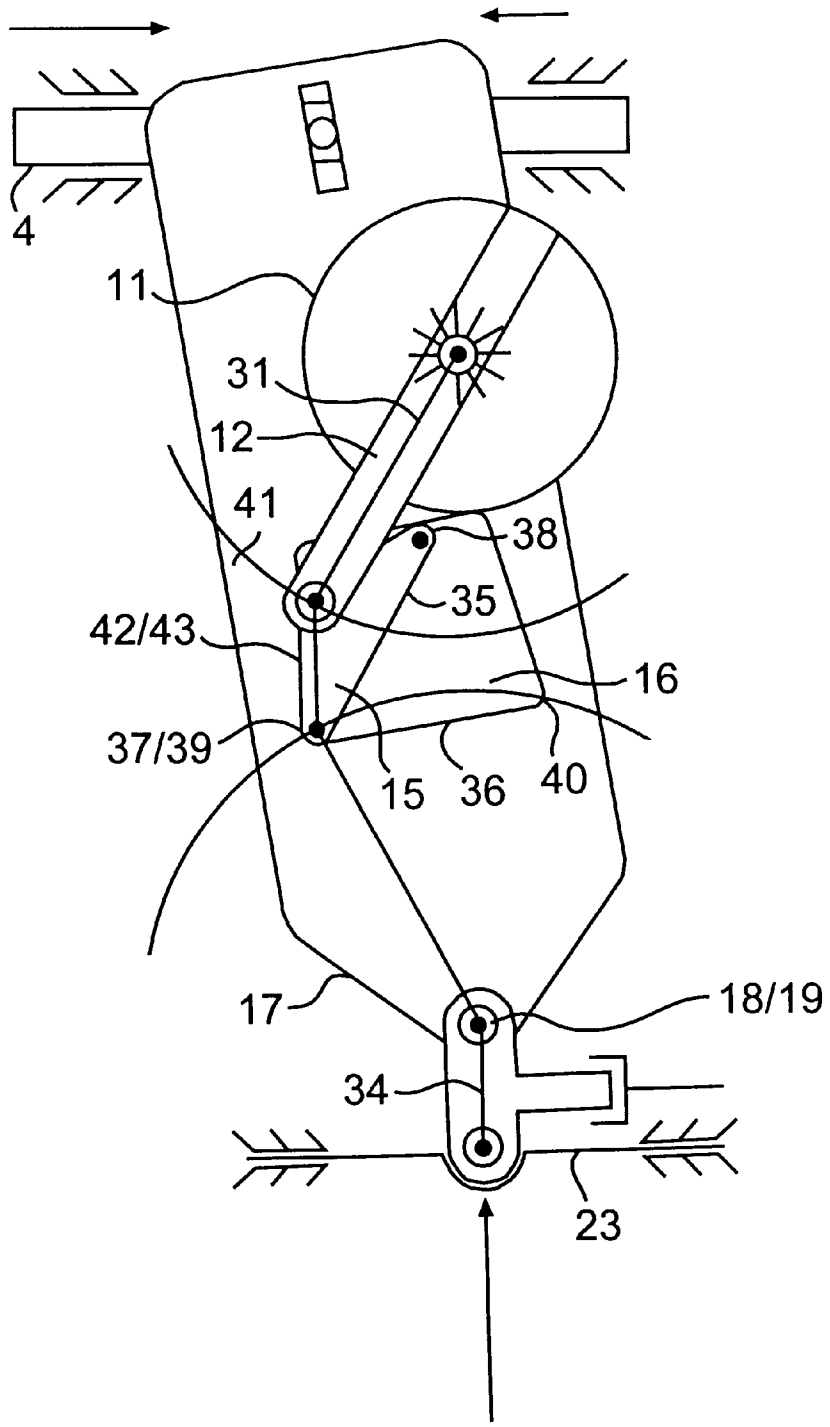

FIG. 3

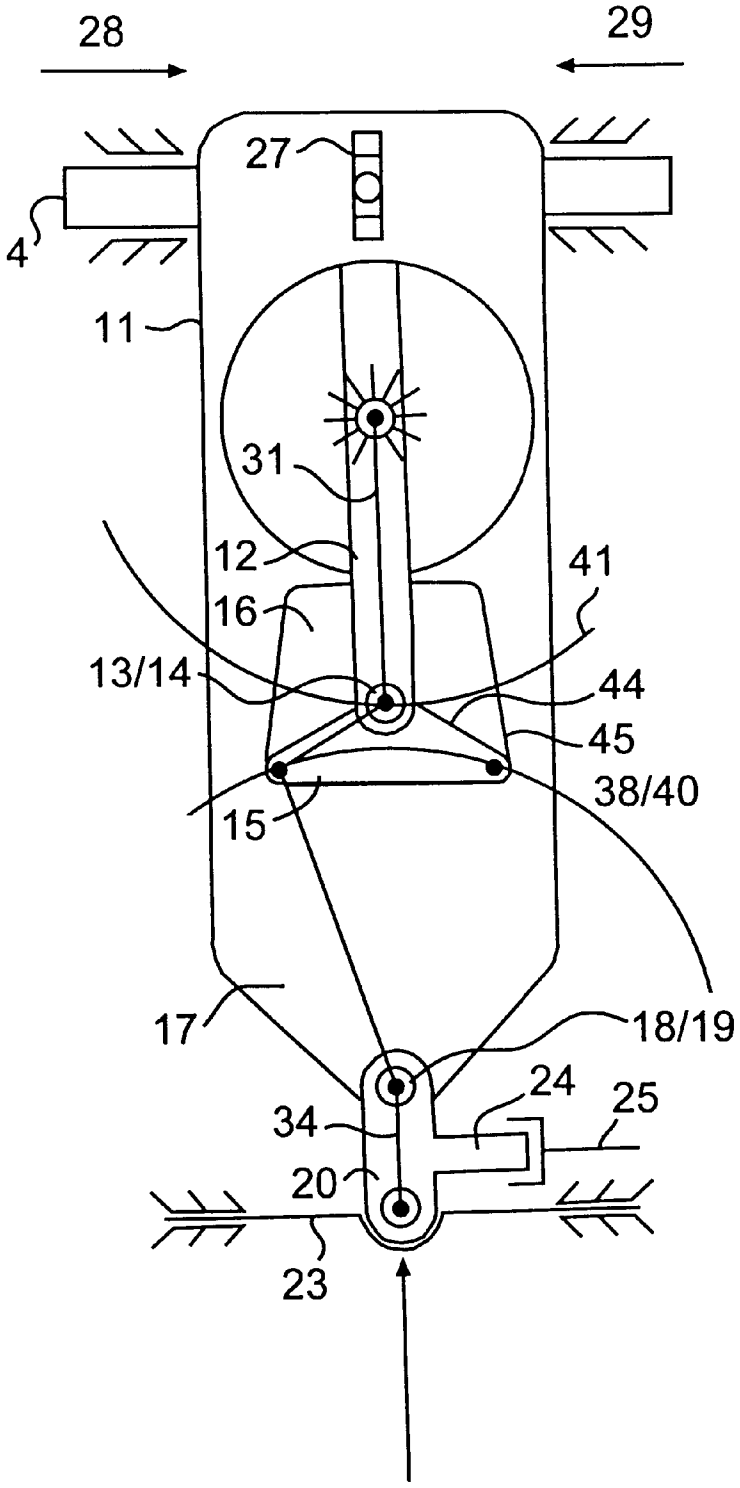

FIG. 4

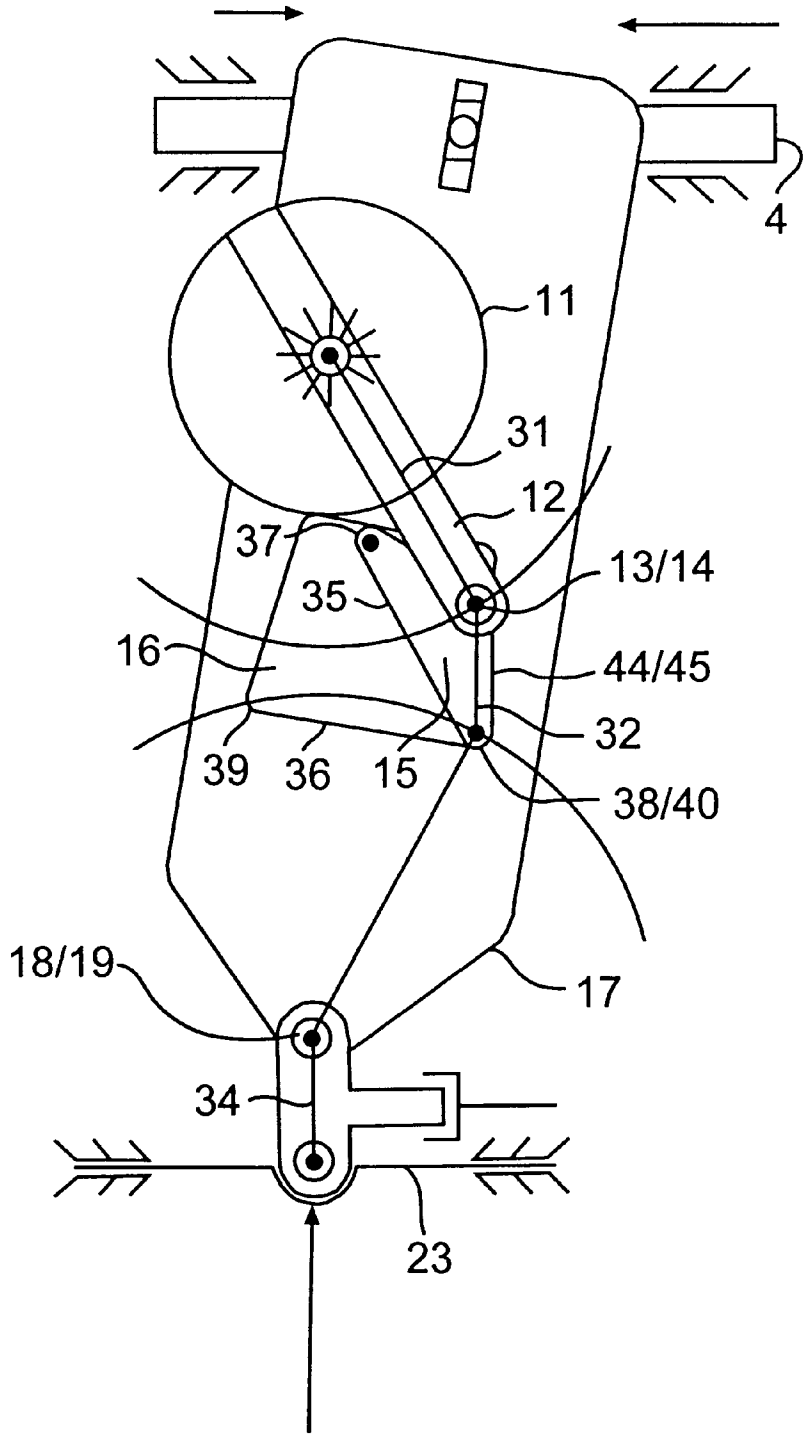

FIG. 5

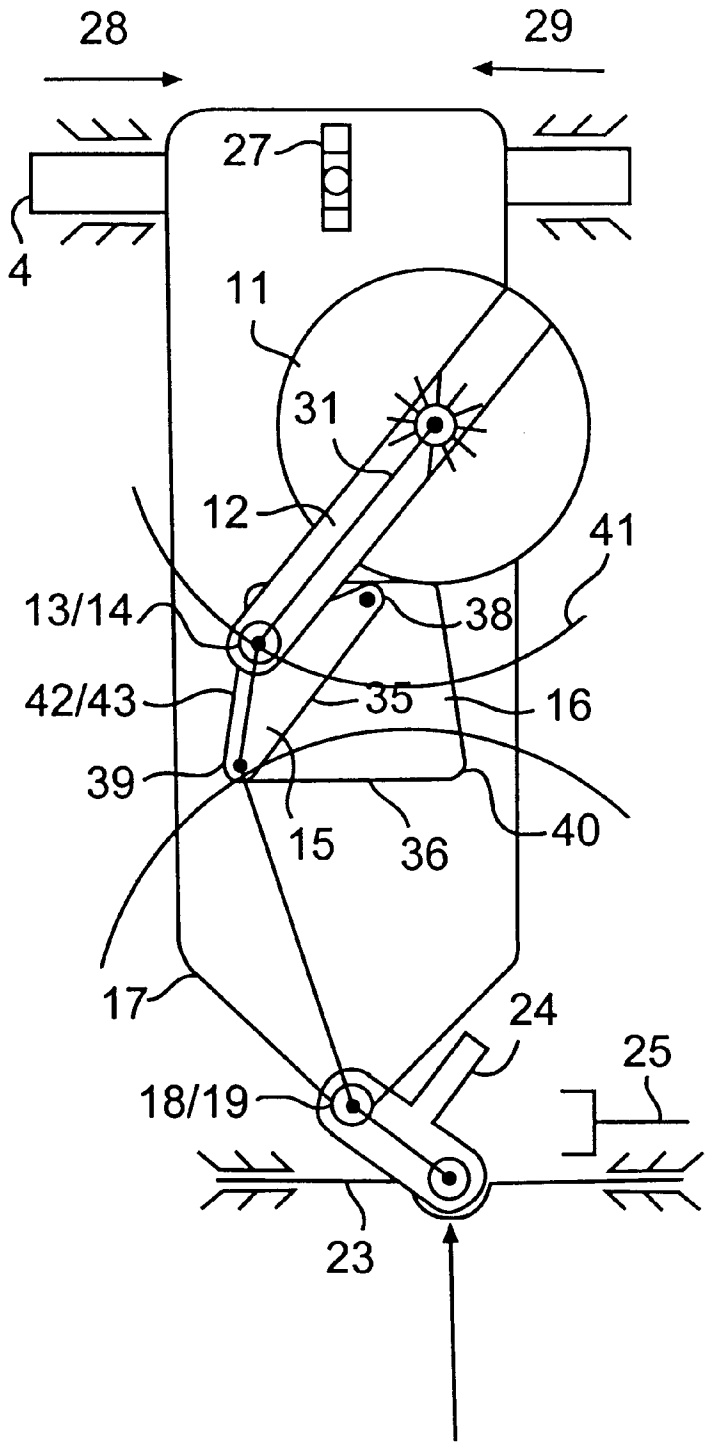

FIG.6

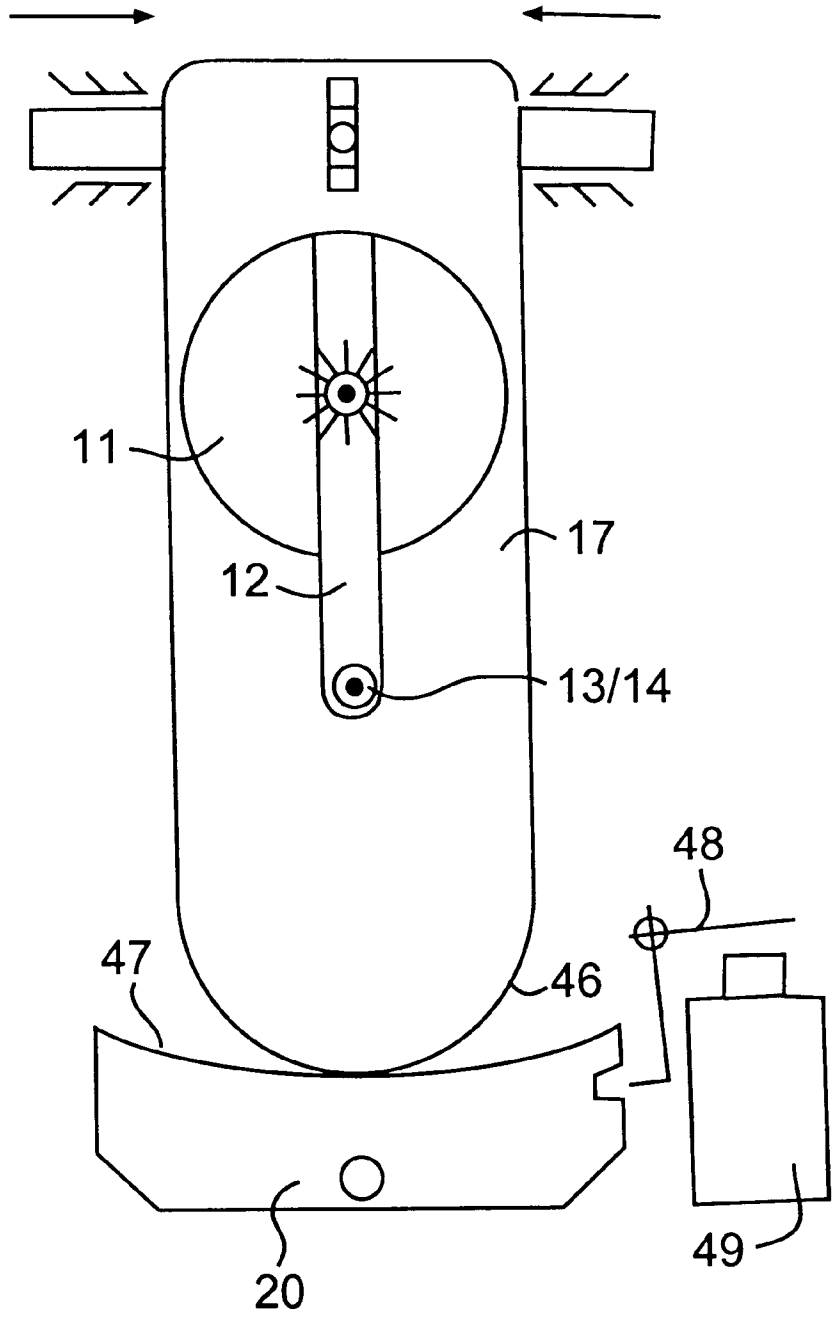

FIG. 7

BREAKER MECHANISM FOR AN ELECTRIC CIRCUIT-BREAKER

TECHNICAL FIELD

The present invention concerns a breaker mechanism for an electric circuit breaker with a position on both sides of a zero position that is especially designed to be multipolar and e.g. can be used as a motor circuit breaker with "off", "forward" or "reverse" positions.

STATE OF THE ART

Corresponding motor circuit breakers are prior art, however there is an ongoing need to improve them. One seeks to provide improvements by simplifying the design and streamlining and hence economizing their manufacture with as much automation as possible. At issue are the number of parts of the breaker mechanism, and how they are joined and engage. Assembly from only one direction is particularly advantageous.

PRESENTATION OF THE INVENTION

Given this background, the invention creates a breaker mechanism for a circuit breaker of the cited kind whose features are listed in patent claim **1**.

The breaker mechanism according to the invention has a rotary handle, an operating lever, an intermediate piece, a latch and a actuating rod whereby:

The rotary handle:
- Is manually actuated,
- Is mounted to a stationary rotary handle shaft and
- Is articulated to the intermediate piece;

The intermediate piece:
- Forms a toggle lever with two effective ends together with the rotary handle, and
- Alternately contacts the operating lever in the two positions with the two effective ends;

The operating lever:
- Has two ends,
- One end is articulated to the latch, and
- The other end is coupled to the actuating rod;

The latch:
- Is mounted on a latch axis that can be moved against the force of a first spring in a lengthwise direction away from the rotary handle axis, and
- Can be latched against rotation on the latch axis; and

The actuating rod:
- Can be moved perpendicular to the lengthwise direction, and
- Is forced directly or indirectly by two counteracting springs into a position corresponding to the zero position.

The breaker mechanism according to the invention is primarily distinguished by a minimum of parts, and it can be assembled from one direction. This provides a trip-free mechanism. Contrastingly, switching on is impossible if the breaker mechanism or its latch is not latched.

BRIEF EXPLANATION OF THE FIGURES

The invention will be further explained in the following with reference to exemplary embodiments in the drawings. Shown are:

FIG. **1** An exploded view of a three-pole circuit breaker with a breaker mechanism according to the invention;

FIGS. **2–5** Schematic representation of the breaker mechanism in different positions;

FIG. **6** Schematic representation of the breaker mechanism when released; and

FIG. **7** Schematic representation of the breaker mechanism with a specially designed rotary handle, latch and locked breaker mechanism.

In the figures, the same parts are provided with the same reference numbers.

EMBODIMENTS OF THE INVENTION

FIG. **1** shows an exploded view of a three-pole electrical circuit breaker that especially can be used as a motor circuit breaker with a position on each side of a zero position. The zero position preferably corresponds to the off position of the circuit breaker, and the positions to either side of the zero position represent two switched-on positions, e.g. forward and reverse of a connected electric motor.

The circuit breaker is modular with several stacked planes. Element **1** is a bottom housing part in the form of a flat shell open at the top. In this shell are three double switch contacts **2** between a middle open position and one "on" position to either side of the middle position. Furthermore, the bottom housing part **1** holds a unit **3** that serves to detect currents that flow via the switch contacts **2** into the two on positions and the voltages between them, and to generate control voltages from these quantities. Finally, the housing part **1** also holds an actuating rod **4** that moves in a lengthwise direction and bears parts of the switch contacts **2**. By moving the actuating rod **4**, the switch contacts **2** can be moved out of a middle open position into a position to either side of the open position.

In another housing part **5** also designed as an open shell, there is a breaker mechanism identified as **6**. An undervoltage relay **7** electrically coupled to the unit **3** serves to latch and unlatch the breaker mechanism **6**.

The circuit breaker **1** is sealed at the top by a cover plate **8**. Screws **9** are used to screw the cover plate **8** to the top housing part **5** that is screwed to the bottom housing part; this fixes all the parts of the circuit breakers **1**. The circuit breaker **1** can be completely assembled from the top, i.e., only from one direction.

A knob **11** extends upward (to the outside) through an opening **10** in the cover plate **8**, and it is part of a rotary handle **12** of the breaker mechanism **6**. The knob **11** holds the rotary handle **12** in the cover opening **10** and hence tightly holds it in the housing (rotary handle axis). The knob **11** can be manually moved to move the rotary handle **12**.

A rotating pin **14** of a triangular intermediate part **15** fits in a hole **13** in the rotary handle **12**, and the intermediate part pivots in an approximately trapezoidal recess **16** in the operating lever **17**.

The bottom end of the operating lever **17** has a pin **18** that rotates in a hole **19** in a latch **20**. At its bottom end, the latch **20** has a cam **21** that sits in a recess **22** of a plate spring **23** which is fixed to the top housing part **5** in a manner not shown. A molded-on part **24** on the latch **20** facing the undervoltage relay **7** forms a latch arrangement together with the armature **25** of the undervoltage relay **7** that can be latched or held in a latched state when the armature **25** is on and is unlatched when the armature **25** off. When unlatched, the latch **20** is free to pivot its cam **21** (latch axis) that rests in the recess **22** of the plate spring **23**. When latched, the pivoting is blocked. In this state, the latch **20** can move against the force of the plate spring **23** somewhat away from the rotary handle shaft **11** in a lengthwise direction identified with **26**.

The top end of the operating lever **17** engages with a connecting cam **27** (that extends into the top housing part **5**) of the actuating rod **4** so that it can be swung in reference to the actuating rod and moved somewhat in a lengthwise direction **26**. As stated, the actuating rod **4** can be moved lengthwise in the bottom housing part **1** and hence perpendicular to the lengthwise direction **26**. The actuating rod **4**, its cam **27** or the top end of the operating lever **17** is also pressed by two counteracting springs **28** and **29** that abut the housing **5** and force the actuating rod **4** into a zero position (FIG. **2** and FIG. **4**). In the zero position, the double switch contacts **2** in the bottom housing part are in an open position and can be closed starting from this position by moving the actuating rod **4** to the side in one or the other directions.

The function of the breaker mechanism **6** consisting of the rotary handle **12**, the intermediate piece **15**, the operating lever **17**, the latch **20**, the (first) spring **23**, the actuating rod **4** and the two (second) springs **28** and **29** will be further explained in the following with reference to FIGS. **2–6**. FIGS. **2** and **4** show the breaker mechanism **6** in a position that corresponds to the zero position of the circuit breakers **1**, and FIGS. **3** and **5** show positions that correspond to the two switched positions of the circuit breakers **1** to the side of the zero position. Correspondingly in FIG. **2** and **4**, the knob **11** and the operating lever **12** are aligned perpendicular to lengthwise direction **26** and can move to the right (FIG. **3**) and left (FIG. **5**) in reference to this direction **26**.

The rotary handle **12**, intermediate piece **15**, operating lever **17** and latch **20** are all flat parts that transmit leverage in both switched positions to the sides of the zero position sometimes in different ways. To illustrate this, the acting levers are drawn as lines **31–34** in FIGS. **2–5**.

In the position in FIG. **2**, the base **35** of the triangular intermediate piece **15** whose tip is articulated to the rotary handle **12** (bearing **13/14**) contacts the base **36** of the trapezoidal cut-out in the operating lever **17**. Its two bottom rounded corners **37** and **38** extend in correspondingly rounded corners **39** and **40** of the cut-out **16**. The corners **37,38** of the intermediate piece **15** can alternatingly rotate in the corners **39**, **40** of the cut-out **16**.

In reference to the position in FIG. **3**, it should first be noted in FIG. **2** that the chain of leverage **31–34** between bearing **13/14** and bearing **18/19** passes via the left corner **37/39** of the intermediate piece **15** or cutout **16**. It is also assumed that the latch **20/34** is latched and is hence blocked from rotating. If the rotary handle **12/31** and the bearing **13/14** are swung together on a circular arc **41** by turning the knob **11** to the right (clockwise), the intermediate piece **15** is also forced to swing on its left bottom corner **37** to the left. The right bottom corner **38** of the intermediate piece **15** swings out of the corner **40** of the trapezoidal cut-out **16**. Since the rotary handle **12/31** and the intermediate piece **15/32** form a toggle lever that is moved out of its extended position (deadpoint), the intermediate piece or its momentarily effective lever **32** exert pressure on the left bottom corner **39** of the trapezoidal cut-out **16** in the operating lever **17/33** and forces it to move. The operating lever **17/33** does this by swinging to the left on bearing **18/19**, and it entrains the actuating rod **4** against the force of the second spring **28**; in addition, the bottom end (bearing **18/19**) of the operating lever **17/33** temporarily escapes the force of the first spring **23**. After passing through its extended position, the first spring **23** supports continued rotation that is finally limited when the left side leg **42** of the triangular intermediate piece **15** contacts the left side leg **43** of the trapezoidal cut-out **16**. This position is shown in FIG. **3**. In this position, the actuating rod **4** is moved until the double-switch contacts **2** shown in FIG. **1** are in one of their two cited "on" positions.

Since the first spring **23** is substantially stronger than the two second springs **28**, **29**, the breaker mechanism **6** cannot independently return to the zero position in FIG. **2** from the position in FIG. **3** since the extended position of the knuckle lever **32/33** must be overcome against the force of the first spring **23**. The breaker mechanism **6** is accordingly locked in the position in FIG. **3**.

FIGS. **4** and **5** show the same described switching procedure starting from the zero position in FIG. **4**, but in the other direction into the other of the two positions of the circuit breaker. The leverage chain **31–34** passes via the right bottom corner **38** of the triangular intermediate piece **15** or the right bottom corner **40** of the trapezoidal cut-out **16** in the operating lever **17**. Its effective lever arm **33** extends between the bearing **18/19** and the corners **38/40**. In the stable position in FIG. **5**, the triangular intermediate piece **15** contacts the right side leg **45** of the trapezoidal cut-out **16** with its right side leg **44**.

It can be seen that the intermediate piece **15** in the described embodiment has an alternating function in reference to the two position in FIG. **3** and FIG. **5**. Together with the rotary handle **12/31**, the intermediate piece **15** forms a toggle lever with two effective ends that are formed by the two bottom corners **37**, **38**. The two corners **37** and **38** also represent bearing axes. Given this possibility, the two corners **37** and **38** may not be fixed to the operating lever **17**. The described loose fit of the two corners **37** and **38** in the bottom corners **39**, **40** of the trapezoidal cut-out **16** in the operating lever **17** ensures this. The dual function of the intermediate pieces **15** and its special interaction with the operating lever **17** advantageously save parts that otherwise would be necessary to realize the same function. This produces a simple and economical design of the overall lock construction.

The shapes of the intermediate piece (**15**) and the cutout (**16**) do not necessarily have to be strictly triangular or trapezoidal. It is enough for the two shapes to be harmonized so that the described function is realized. It is in particular inconsequential how the top edge of the cut-out in the figures is shaped. A flat support for the base or the side leg of both parts is also unnecessary. The intermediate piece could hence also be star-shaped, for example. Finally, of course, a molded-on part of the operating lever could e.g. engage with a recess in the intermediate piece. The corresponding is true for the other connections of the described functional elements.

FIG. **6** shows the breaker mechanism **6** in a released position that e.g. is reached in case of a fault from the position in FIG. **3** under the force of the loaded second spring **28**. As can be seen, the actuating rod **4** is pushed back by spring **28** toward its zero position in FIG. **3** until the switch contacts **2** that it contacts can open. This movement of the actuating rod **4** was enabled by releasing the latching **24/25** of the latch **20/34** and circumventing the described locking of the toggle lever and without rotating the rotary handle **12/31** (trip-free). The latch **20/34** is freed to pivot on its cam **22** which enables the operating lever **17/33** to yield to the pressure of the actuating rod **4** and rotate back on the bearing **13/14** on the bottom end of the rotary handle **12/31**. If conversely one attempts to move the switch out of its zero position in FIG. **3** when the lock is released, only the position in FIG. **6** is reached. This means that the switch cannot be moved to its "on" position when the lock is released.

A comparable released position arises proceeding from the position in FIG. **4** with a released lock, or proceeding

from the position in FIG. **5** after releasing the latching. The operating lever **17**/**33** is symmetrically moved to the right beyond the middle marked by line **26** in contrast to its position in FIG. **6**.

FIG. **7** shows specific embodiments of the rotary handle **12** and the latches **20**. The rotary handle **12** has been lengthened up to the latch **20**, and its convex radius **46** contacts a concave radius **47** of the latch **20**. The two radii **46**, **47** are designed so that the latch **20** (swung e.g. as in FIG. **6**) is necessarily swung from its swung position in FIG. **6** into its neutral position in FIG. **2** or FIG. **4** in which it can be relatched. The corresponding molded parts on the rotary handle **12** and on the latch **20** can be moved toward the operating lever **17** and the intermediate piece **15**. In the drawing in FIG. **1**, they can be in a plane above these elements. In FIGS. **2**–**6**, they are left out to better identify the operating lever **17** and the intermediate piece **15**.

Finally, FIG. **7** also shows a possible way of latching the latch **20** where the armature **48** of an undervoltage relay **49** is an integral part of the latching.

What is claimed is:

1. A breaker mechanism for an electric circuit breaker having a first switching position on a first side of a middle switching position and a second switching position on a second side of the middle switching position, the breaker mechanism comprising:

a manually actuated rotary handle mounted to a stationary shaft;

an intermediate piece articulated to the rotary handle, the intermediate piece having first and second actuating ends and forming together with the rotary handle a toggle-lever with first and second effective ends, the effective ends of the toggle lever being formed by the actuating ends of the intermediate piece;

an operating lever having a first operating lever end, a second operating lever end, a first abutement and a second abutement;

a latch lever articulated to the first operating lever end and mounted to a latch axis that can be moved against force of a first spring in a first direction away from the stationary shaft of the rotary handle, the latch lever being capable of being latched against rotation around the latch axis; and

an actuating rod coupled to the second operating lever end and movable perpendicular to the first direction,

wherein the actuating rod is forced directly or indirectly into a position corresponding to the middle switching position by two counteracting springs,

wherein the actuating rod is forced into a position corresponding to the first switching position when the intermediate piece acts with its first effective end on the first abutement of the operating lever, and

wherein the actuating rod is forced into a position corresponding to the second switching position when the intermediate piece acts with its second effective end on the second abutement of the operating lever.

2. The breaker mechanism according to claim **1**, wherein the rotary handle, the intermediate piece, the operating lever, the latch lever, and the actuating rod are movable in parallel planes.

3. The breaker mechanism according to claim **1**, wherein the rotary handle, the intermediate piece, the operating lever, the latch lever, and the actuating rod are situated in a flat housing part with an open-shell shape and closed with a cover plate.

4. The breaker mechanism according to claim **3**, wherein the stationary shaft of the rotary handle is mounted in an opening of the cover plate.

5. The breaker mechanism according to claim **1**, wherein the intermediate piece pivots in a cut-out area of the operating lever.

6. The breaker mechanism according to claim **1**, wherein the intermediate piece has a triangle shape with a base, two side legs, a tip opposite the base, and two rounded corners connecting the base with the two side legs, wherein the tip engages with the rotary handle, and the two rounded corners form the first and second actuating ends of the intermediate piece.

7. The breaker mechanism according to claim **1**, wherein the intermediate piece pivots in a cut-out area of the operating lever, wherein the cut-out area has a trapezoidal shape with a base, two side legs, and two rounded corners connecting the base with the two side legs, and wherein the two rounded corners form the first and second abutements of the operating lever.

8. The breaker mechanism according to claim **1**, wherein the intermediate piece has a triangle shape with a base, two side legs, a tip opposite the base, and two rounded corners connecting the base with the two side legs, wherein the tip engages with the rotary handle, and the two rounded corners form the first and second actuating ends of the intermediate piece, wherein the intermediate piece pivots in a cut-out area of the operating lever, wherein the cut-out area has a trapezoidal shape with a base, two side legs, and two rounded corners connecting the base with the two side legs, wherein the two rounded corners of the cut-out area form the first and second abutements of the operating lever, and wherein the two rounded corners of the intermediate piece fit the two rounded corners of the cut-out area of the operating lever.

9. The breaker mechanism according to claim **8**, wherein the base of the intermediate piece contacts the base of the cut-out area of the operating lever in the middle switching position of the circuit breaker, and one of the two side legs of the intermediate piece alternately contact one of the two side legs of the cut-out area in one of the first and second switching positions.

10. The breaker mechanism according to claim **1**, wherein the latch lever has a latching position parallel to the first direction but can swing out of the latching position to a swung out position upon unlatching, wherein the rotary handle has a first position corresponding to the first and the second switching positions and a second position corresponding to the middle switching position, and wherein the rotary handle contacts the latch lever in such a manner that the rotary handle carries the latch lever from the swung out position to the latching position when the rotary handle is turned after unlatching from said first position into said second position.

11. The breaker mechanism according to claim **1**, further comprising an undervoltage relay for latching the latch lever, wherein an armature of the undervoltage relay is a part of a latching action, and the latch is released when the armature is removed.

12. The breaker mechanism according to claim **1**, further comprising at least one switch contact, and wherein the actuating rod actuates said at least one switch contact when the actuation rod is moved.

* * * * *