July 13, 1943. V. E. HUFF 2,324,454

LOUVER PIVOT CLIP

Filed June 4, 1940

Fig. 1

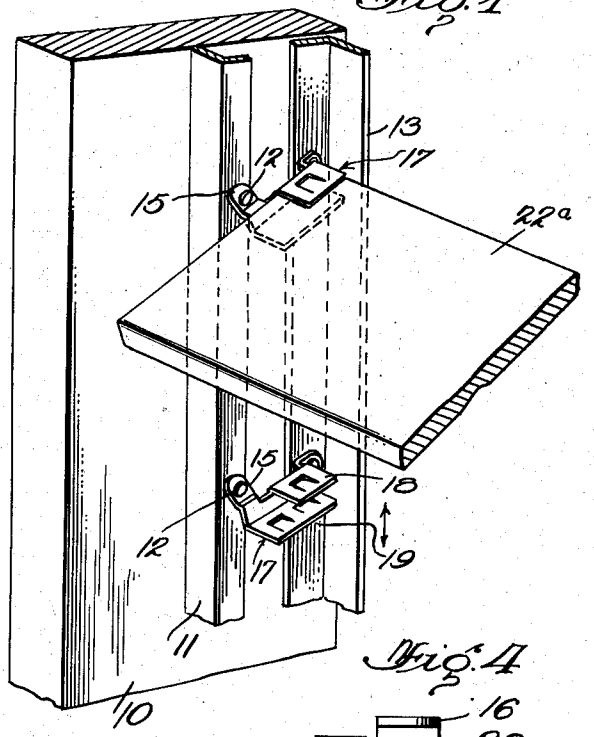

Fig. 2

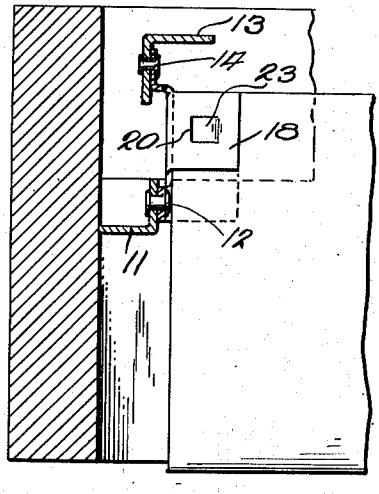

Fig. 4

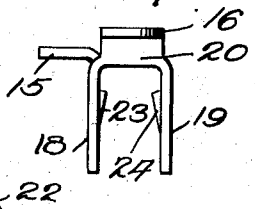

Fig. 5

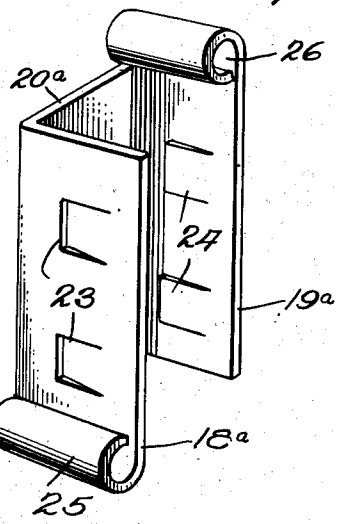

Fig. 3

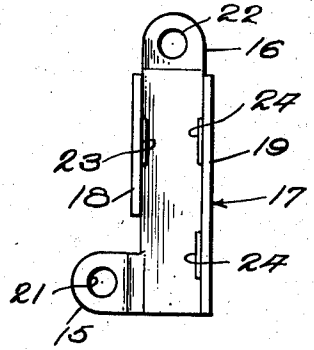

Fig. 6

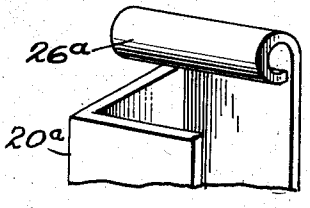

Inventor

Van. E. Huff

By Ivan P. Lashof

Attorney

Patented July 13, 1943

2,324,454

UNITED STATES PATENT OFFICE

2,324,454

LOUVER PIVOT CLIP

Van E. Huff, Miami, Fla., assignor of one-half to Charles F. Miller, Miami, Fla.

Application June 4, 1940, Serial No. 338,799

5 Claims. (Cl. 20—62)

The present invention relates to a louver construction and more particularly to a pivot clip especially adapted to be attached to a louver slat and provided with pivot receiving members.

One of the problems in the louver art has been to provide suitable pivots on which the slats of the louver may be mounted for easy rotational movement. While it is known in the prior art to provide pivot members fastened to wooden or metallic slats, and which are provided with some pivoting means, these members have been difficult to attach to wooden louvers in a convenient and economical manner and the general practice has been to provide a number of pivot receiving members. This has resulted in difficulties of assembly and has in some instances prevented the economical utilization and easy manufacture of louver constructions embodying numerous slats.

One of the objects of the present invention therefore, is to provide a pivot clip construction especially adapted to be utilized in connection with a louver embodying a plurality of movable slats and having a fixed pivot supporting member and a movable pivot supporting member.

Another object of the present invention is to provide a pivot clip which is capable of being fabricated in a simple operation from suitable metal as by stamping or otherwise, and has integrally formed thereon a plurality of pivot receiving members.

Still another object of the present invention is to provide a pivot clip construction embodying struck out members for attaching the clip to a slat.

Another object of the present invention is to provide in a louver construction a pivot clip having at least one of its pivot receiving members offset from the clip proper so that a movable portion of louver mechanism pivoted to this pivot receiving member may slide over a fixed portion of the louver construction which is pivoted to another pivot receiving member on the same clip.

A further object of the present invention is to provide a pivot clip construction embodying one pivot receiving portion extending axially outwardly at one end of the clip and another pivot portion extending transversely outwardly at the other end of the clip.

Still another object of the present invention is to provide a pivot clip construction wherein the pivot receiving members are formed integrally from the side portions of the clip and/or connecting or end portions of the clip.

A further object of the present invention is to provide a pivot clip of a general U shape, the legs of the U having integral struck out members for attaching each of the legs of the U to a louver slat.

Other objects and advantages of the present invention will appear from the subsequent description and drawing.

With the above and other objects in view the invention consists in general of certain novel details of construction and combination of parts hereinafter fully described, illustrated in the accompanying drawing, and particularly pointed out in the appended claims.

In the accompanying drawing like characters of reference indicate like parts in the several views, and;

Figure 1 is a perspective of a fragment of a louver construction embodying the clip of the present invention.

Figure 2 is a plan view partly in section of a portion of a louver construction embodying the present clip.

Figure 3 is an enlarged elevation of the clip of the present invention.

Figure 4 is a plan view of the clip.

Figure 5 is a perspective of a modified form of clip member.

Figure 6 is a fragmentary perspective view of a modified clip similar to the clip of Fig. 5.

Referring to Figure 1 of the drawing, a suitable louver frame is indicated at 10. Fixedly mounted on the louver frame 10 by any suitable fastening means (not shown) is a longitudinally extending L shaped member 11 which is adapted to provide a seat or journal for a plurality of pivot members 12. The pivot members 12 may be in the form of a hollow or solid rivets and as stated are journaled or rotatably mounted on the free leg of the L shaped member 11, as shown particularly in Figure 2. The louver proper is also provided with a movable member or L shaped bar 13, which may be moved upwardly or downwardly by any suitable louver operating member. Such a louver operating member is disclosed in detail in my co-pending application Serial No. 283,500, filed July 8, 1939, now Patent No. 2,257,056, patented Sept. 23, 1941, of which the present application is a continuation in part.

The L shaped member 13 is offset sufficiently from the member 11 that when the louver slats are completely closed the member 13 will slide over the member 11 to form a weather stripping for the edges of the louver slats. This provision may be similar in general to that described and claimed in my Patent No. 2,168,347, dated Aug. 8,

1939. It is to be understood that the pivot clip construction described herein is especially adapted for use with a movable and fixed member such as the members 11 and 13 which are slidable one over the other and which therefore, must be offset relative to one another. The member 13 is adapted to have journaled in one of the legs thereof, a plurality of pivots 14 similar in nature to the pivots 12. As shown in the drawing, the pivot members 12 and 14 are rotatably mounted in pivot receiving ears 15 and 16 formed integrally with suitable clip members designated in general by the reference number 17. The clip 17 is formed of a pair of relatively flat side portions 18 and 19 connected by a connecting portion 20, so that the clip is U-shaped in cross-section.

Referring particularly to Figure 3, it will be noted that the side portion 18 is shortened so that a portion of the material of the side portion may be utilized to form the pivot receiving ear 15. The pivot member 15 is slightly offset rearwardly from the plane of the connecting member 20 as shown in Figure 4. However, this amount of offset is not as great as the offsetting of the member 16 which must be offset sufficiently to permit the sliding action of the movable bar 13 relative to the stationary bar 11. Both of the pivot receiving members or ears 15 and 16 are provided with suitable openings 21 and 22 respectively which are adapted to receive the rivets or pivots 12 and 14.

As shown in the drawing, each of the side portions 18 and 19 are provided with struck out tabs, or lugs, which are adapted to dig into the material of the slat 22a in order to firmly fix the pivot clip on the slat. It will be understood that in the actual louver a great many of these pivots clips are provided and correspondingly great numbers of slats although only one slat is shown in Figure 1 and an additional pivot clip member. The struck out tabs or lugs in each of the side portions 18 and 19 are denoted by the reference numerals 23 and 24 respectively. As shown in Figure 3 the side portion 19 is provided with two of these struck out members while the side portion 18 is only provided with one, due to its shorter length. In each instance the tabs or lugs 23 and 24 are joined to the side portions 18 and 19 at a point remote from the connecting portion 20 and project into the slat in such a manner that they prevent the removal of the clip from the slat. Although the pivot receiving ear 15 is shown as formed from the material of the side 18 and projected upwardly in Figure 1, it is obvious that it may be formed from the material of the side 19 and projected downwardly without changing the functioning of the device.

It is to be understood that the clip is preferably formed from a suitable thin metal which lends itself to the stamping operations, such as brass and the like, although other materials may be used. Although the clip is shown attached to a slat which is of wood it may be used for receiving a pivot member in connection with slats of other materials, as for example, synthetic wood materials of the nature of masonite, or plastic materials. By changing the form of the attaching means it may be used, also in connection with metal slats, slats of glass or slats of synthetic plastics.

Referring particularly to the modification of the clip shown in Figure 5, it will be noted the pivot receiving members here shown are rolled from the material of the opposed relatively flat side portions 18a and 19a which correspond in general to the portions 18 and 19 of Figures 1 to 4 inclusive. The side members 18a and 19a of Figure 5 are similarly joined by a portion 20a so that the modified clip here shown is also formed in the shape of the letter U. The struck out tabs 23a and 24a are entirely similar and have a similar function to the tabs 23 and 24 of Figures 1 to 4. As shown in Figure 5, the pivot receiving member 26 is rolled from the upper portion of the side 19a so that it projects in an axial direction from the connecting portion 20a. The function of this member is entirely similar to that of the projecting ear 16 of the first described modification, and the same offset may be accomplished by lengthening the rolled portion 26 beyond surface 20a, as shown in Fig. 6, wherein the extended portion is indicated by the reference number 26a. Similarly, the rolled over pivot receiving portion 25, which extends from the side portion 18a, may be said to extend transversely with relation to the connecting portion 20a. The functioning of this member is entirely similar, therefore, to the pivot receiving ear member 15 of Figures 1 to 4.

While it may be stated in general that the modification disclosed in Figure 5 is adapted to receive a heavier pivot for use with heavier slats, it is to be understood that either of the two pivot clips may be effectively used in any suitable louver construction. The pivot clip member disclosed in Figures 1 to 4 is in general simpler to manufacture, since it does not involve any rolling operation, but may be formed by a simple stamping or series of stamping operations.

While the clip of Figures 1 to 4 is especially designed for use on an inside jalousie door wherein light plywood slats are used, it is to be understood that it may be proportioned in a larger manner and used on any louver construction and that similarly the clip of Figure 5 could be proportionad to be used on light inside constructions as well as on the relatively heavier slats for which it is especially suitable.

The form of the pivot clip shown in Figs. 1 to 4 inclusive is claimed in applicant's copending application Serial No. 474,745, filed February 4, 1943.

What I claim is:

1. A pivot clip for louver slats comprising a pair of spaced substantially parallel flat side portions connected at one of their longitudinal edges by a connecting portion, a pivot receiving member comprising an extending portion of one of said side portions, said extended portion being adjacent one of said longitudinal edges and rolled over upon itself toward the other of said side portions to form a pivot receiving bore substantially perpendicular to the plane of said connecting portion and a second pivot receiving member, comprising an integral rolled over portion of one of said side portions extending from said clip at an end thereof remote from said first pivot receiving member and provided with a bore substantially parallel to said first pivot receiving member.

2. A pivot clip for louver slats comprising a pair of spaced substantially parallel flat side portions connected at one of their longitudinal edges by a connecting portion, a pivot receiving member comprising an extending portion of one of said side portions, said extended portion being adjacent one of said longitudinal edges and rolled over upon itself toward the other of said side portions to form a pivot receiving bore substantially perpendicular to the plane of said connecting portion and a second pivot receiving member,

comprising an integral rolled over portion of one of said side portions extending from said clip at an end thereof remote from said first pivot receiving member and provided with a bore substantially parallel to said first pivot receiving member, said pivot receiving members being so positioned that one of said bores is offset longitudinally relative to said connecting means and the other of said bores is offset transversely relative to said connecting means.

3. A pivot clip for louver slats comprising a pair of spaced substantially parallel flat side portions connected at one of their longitudinal edges by a connecting portion, a pivot receiving member comprising an extending portion of one of said side portions, said extended portion being adjacent one of said longitudinal edges and rolled over upon itself toward the other of said side portions to form a pivot receiving bore substantially perpendicular to the plane of said connecting portion, a second pivot receiving member comprising an integral rolled over portion of one of said side portions extending from said clip at an end thereof remote from said first pivot receiving member and provided with a bore substantially parallel to said first pivot receiving member, and means struck out from the body of the flat portions for attaching the pivot clip to a louver slat.

4. A pivot clip comprising a pair of spaced substantially parallel flat side portions connected at one of their longitudinal edges by a connecting portion, a pivot receiving member comprising an extended portion of one of said side portions, said extended portion being adjacent one of said longitudinal edges and rolled over upon itself toward the other of said side portions to form a pivot receiving bore substantially perpendicular to the plane of said connecting portion, and a second pivot receiving member comprising a rolled over portion of the other of said side portions and extending from the other side portion at an end thereof remote from said first pivot receiving member and provided with a bore substantially parallel to said first pivot receiving member, said last mentioned pivot receiving member being longitudinally offset relative to said connecting portion.

5. A pivot clip for louver slats comprising a pair of spaced substantially parallel flat side portions connected at one of their longitudinal edges by a connecting portion, a pivot receiving member comprising an extending portion of one of said side portions, said extended portion being adjacent one of said longitudinal edges and rolled over upon itself toward the other of said side portions to form a pivot receiving bore substantially perpendicular to the plane of said connecting portion, and a second pivot receiving member comprising an integral rolled over portion of one of said side portions extending from said clip at an end thereof remote from said first pivot receiving member and provided with a bore substantially parallel to said first pivot receiving member, one of said pivot receiving members extending beyond said connecting means so as to form a relatively long bore as compared to said other of said pivot members.

VAN E. HUFF.