(12) INTERNATIONAL APPLICATION PUBLISHED UNDER THE PATENT COOPERATION TREATY (PCT)

(19) World Intellectual Property Organization
International Bureau

(43) International Publication Date
9 February 2012 (09.02.2012)

PCT

(10) International Publication Number
WO 2012/019084 A1

(51) International Patent Classification:
*B65D 5/00* (2006.01) *B65D 71/12* (2006.01)
*B65D 5/20* (2006.01) *B65D 5/50* (2006.01)
*B65D 5/24* (2006.01)

(21) International Application Number:
PCT/US2011/046716

(22) International Filing Date:
5 August 2011 (05.08.2011)

(25) Filing Language: English

(26) Publication Language: English

(30) Priority Data:
1013220.7 5 August 2010 (05.08.2010) GB
1013221.5 5 August 2010 (05.08.2010) GB

(71) Applicants *(for all designated States except US)*: **MEADWESTVACO PACKAGING SYSTEMS, LLC** [US/US]; Law Department, 501 South 5th Street, Richmond, Virginia 23219-0501 (US). **RED BULL GMBH** [AT/AT]; Am Brunnen 1, A-5330 Fuschl am See (AT).

(72) Inventors; and

(75) Inventors/Applicants *(for US only)*: **AUCLAIR, Jean-Michel** [FR/FR]; 230 Route de Chatellerault, F-36000 Chateauroux (FR). **HETTINGER, Peter** [DE/DE]; Schneidersberg 2, 54311 Trierweiler (DE). **MENZEL, Andree** [DE/DE]; Weingarten Strasse 94, D-54492 Zeltingen-Rachtig (DE). **HULS, Peter** [DE/DE]; Dornfelderstrasse 7, D-54536 Krov (DE).

(74) Agents: **BOSHINSKI, Thomas, A** et al.; MeadWestvaco Corporation, 501 South 5th Street, Richmond, Virginia 23219-0501 (US).

(81) Designated States *(unless otherwise indicated, for every kind of national protection available)*: AE, AG, AL, AM, AO, AT, AU, AZ, BA, BB, BG, BH, BR, BW, BY, BZ, CA, CH, CL, CN, CO, CR, CU, CZ, DE, DK, DM, DO, DZ, EC, EE, EG, ES, FI, GB, GD, GE, GH, GM, GT, HN, HR, HU, ID, IL, IN, IS, JP, KE, KG, KM, KN, KP, KR, KZ, LA, LC, LK, LR, LS, LT, LU, LY, MA, MD, ME, MG, MK, MN, MW, MX, MY, MZ, NA, NG, NI, NO, NZ, OM, PE, PG, PH, PL, PT, QA, RO, RS, RU, SC, SD, SE, SG, SK, SL, SM, ST, SV, SY, TH, TJ, TM, TN, TR, TT, TZ, UA, UG, US, UZ, VC, VN, ZA, ZM, ZW.

(84) Designated States *(unless otherwise indicated, for every kind of regional protection available)*: ARIPO (BW, GH, GM, KE, LR, LS, MW, MZ, NA, SD, SL, SZ, TZ, UG, ZM, ZW), Eurasian (AM, AZ, BY, KG, KZ, MD, RU, TJ, TM), European (AL, AT, BE, BG, CH, CY, CZ, DE, DK, EE, ES, FI, FR, GB, GR, HR, HU, IE, IS, IT, LT, LU, LV, MC, MK, MT, NL, NO, PL, PT, RO, RS, SE, SI, SK,

*[Continued on next page]*

(54) Title: CARTON AND CARTON BLANK

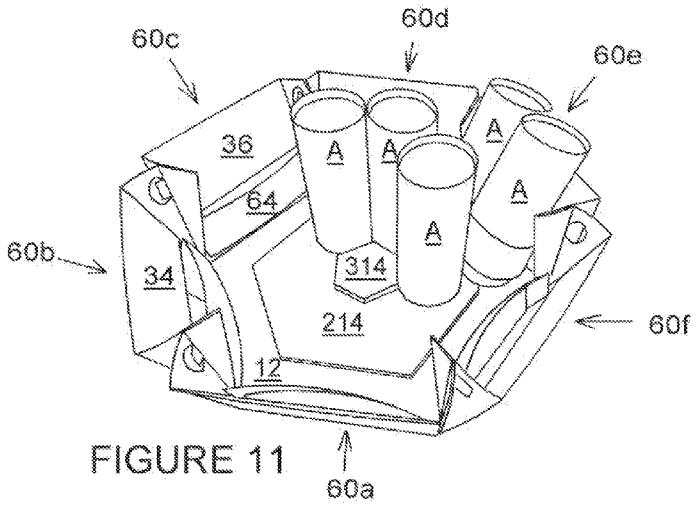


FIGURE 11

(57) Abstract: A carton for one or more articles comprises a base part having a base panel and side wall panels wherein a first side wall panel (14) is coupled to a second side wall panel (16) by a first and second web panel (42, 44). The first web panel (42) is secured to the second web panel (44) so as to allow the first and second sidewall panel to be moved from a closed position in which the first and second web panels abut one another to an open position in which the first and second web panels are fanned apart. A base insert (214) is disposed on the base panel, the base insert being sized and arranged for encouraging an upper portion of one or more articles to lean over from a vertical position to be inclined with respect to the base panel.

WO 2012/019084 A1

SM, TR), OAPI (BF, BJ, CF, CG, CI, CM, GA, GN, GQ, GW, ML, MR, NE, SN, TD, TG).

**Published**:

— *with international search report (Art. 21(3))*

— *before the expiration of the time limit for amending the claims and to be republished in the event of receipt of amendments (Rule 48.2(h))*

# CARTON AND CARTON BLANK

## FIELD OF INVENTION

The present invention relates to a carton and blank for forming the same, more specifically, but not exclusively to a carton which can be expanded to accommodate additional items such as ice.

## BACKGROUND OF THE INVENTION

In the field of packaging it is often required to provide consumers with a package comprising multiple primary product containers or individual articles such as soft drinks or other beverages. Such multi-packs are desirable for shipping and distribution and for display of promotional information. For cost and environmental considerations, such cartons or carriers need to be formed from as little material as possible and cause as little wastage in the material from which they are formed as possible. Another consideration is the strength of the packaging and its suitability for holding and transporting the weight of the articles.

It is also desirable for such cartons to be easy to handle and portable. It is also useful for the consumer to be able to add ice-cubes into such a carton in order to cool the beverage cans or bottles contained within the carton. It is therefore desirable for the cartons to be adaptable so that the capacity of the carton can be increased to accommodate the addition of ice-cubes or other items. It is desirable for such cartons to be substantially water resilient so that once the ice-cubes have melted the carton structure remains substantially intact and does not allow the water to readily leak from the carton.

## SUMMARY OF INVENTION

The present invention seeks to overcome or at least mitigate the problems of the prior art.

According to a first aspect of the present invention there is provided a carton for containing one or more articles which carton comprises a base part having a base panel and a plurality of side wall panels wherein a first side wall panel is coupled to a second side wall panel by a first and a second web panel, wherein said first and second web panels are hinged to one another by a first fold line and wherein the first web panel is hinged to said first side wall panel by a second fold line and the second web panel is hinged to the second side wall panel by a third fold line wherein the first web panel is secured to the second web panel at a position distal from said second and third fold lines so as to allow the first and second sidewall panels to be moved from a closed position in which the first and second web panels abut one another to a open position in which the first and second web panels are fanned apart.

Preferably, the first and second web panels are secured together by a mechanical lock.

Preferably, the mechanical lock comprises a male part and a female part which female part receives a portion of the male part.

Preferably, the web panels are partially secured together by adhesive.

Preferably, the web panels each comprise a fold line or score line for facilitating fanning apart of the web panels.

Preferably, the male and female part are located on a respective score line of the first and second web panels.

Preferably, the carton further comprises a top cover which holds the base part in the closed configuration.

Preferably, the web panels extend into a void defined, in part, by the first and second side wall panels.

Preferably, the plurality of side panels define a void, and each of said plurality of side panels defines a vertex with another adjacent one of said plurality of side panels wherein a pair of web panels couples each of said plurality of side panels to an adjacent one of said plurality of side panels, each pair of web panels extending from each vertex into the void

Preferably, the web panels are each disposed in a single plane at an acute angle relative to the adjacent side wall panel.

Preferably, the angle is less than 68 degrees and no less than 30 degrees. More preferably, the angle is 60 degrees or 45 degrees.

Preferably, adjacent pairs of the first and second web panels define a compartment within the carton.

More preferably the web panels form partition structures between adjacent articles.

Preferably, the carton comprises pockets structures for receiving one or more articles.

Preferably, the carton comprises an insert tool for spacing apart one or more articles.

Preferably, the insert tool comprises an aperture for receiving an article and an outer edge for engaging with an adjacent article.

Preferably, the insert tool is substantially annular in shape.

Preferably, the insert tool comprises one or more recesses disposed about an outer edge for receiving a respective portion of one or more articles.

Preferably, the insert tool comprises one or more tabs disposed about the aperture for engaging with said article.

According to a second aspect of the present invention there is provided an insert tool for spacing apart one or more articles held within a carton, the insert tool comprising an aperture for receiving an article and an outer edge for engaging with an adjacent article.

Preferably, the insert tool is substantially annular in shape.

Preferably, the insert tool comprises one or more recesses disposed about an outer edge for receiving a respective portion of one or more articles which recesses are shaped to be complementary with article.

Preferably, the insert tool comprises one or more tabs disposed about the aperture for engaging with said article.

According to a third aspect of the present invention, there is provided a carton for containing a plurality of articles which carton comprises a base panel and a plurality of side wall panels wherein each of said plurality of sidewall panels is coupled to an adjacent sidewall panel by a pair of gusset panels which gusset panels extend into the carton to compartments each for receiving one or more articles.

Preferably, each of the gusset panels is disposed in a single plane at an angle to an adjacent side wall panels.

Preferably, the angle is less than 68 degrees and no less than 30 degrees. More preferably, the angle is 60 degrees or 45 degrees.

Preferably, the pairs of the gusset panels each defines a partition define between a pair of adjacent articles.

According to a fourth aspect of the present invention, there is provided a carton for containing one or more articles which carton comprises a base panel and a plurality of side wall panels wherein at least one side wall panel comprises a pocket comprising a first panel hinged to a second panel which is hinged to a third panel, wherein said first and third panels are each folded into overlapping relationship with the second panel, end most portions of the first and third panels are secured to said at least one side wall panel, portions of the first and third panels adjacent the second panel being free to be displaced away from said at least one wall such that the one or more articles are receivable within the pocket.

According to a fifth aspect of the present invention, there is provided a blank for forming a pocket structure which blank comprises an outer side wall panel hinged to an inner side wall panel along a fold line disposed along an end edge, wherein the inner side wall panel is hinged to first and second securing panels along opposing side edges thereof, the inner side panel comprising a cutline extend across the inner side wall panel, the cutline extending partially into the first and second securing panels to define in part displaceable portions therein.

Preferably, the securing panels comprise a fold line or score line disposed at an end edge of the cutline for facilitating folding of the displaceable portions.

According to a sixth aspect of the present invention there is provided a carton for receiving one or more articles comprising a base panel and a plurality of side walls panels wherein a first base insert is disposed on the base panel, the first base insert being sized and arranged for

encouraging one or more articles to lean over from an upright position to be inclined with respect to the base panel.

Preferably, the first base insert partially covers the base panel to create a step.

Preferably, the first base insert is shaped similarly to the base panel of the carton.

Preferably, the first base insert is smaller in dimension than the base panel of the carton.

Preferably, the first base insert comprises an inclined or angled upper surface for receiving one or more articles.

Preferably, the first base insert is secured to the base panel.

Preferably, the first base insert is secured with adhesive.

Preferably, the first base insert is in flat face contacting relationship with the base panel.

Preferably, the first base insert is hexagonal in shape.

Preferably, the first base insert is star shaped.

Preferably, the first base insert is a six pointed star such as a hexagram.

Preferably, there comprises a second base insert preferably placed on top of the first base insert.

Preferably, the second base insert is used as a spacer means and comprises a side edge for abutting one or more articles.

According to a seventh aspect of the present invention, there is provided a package comprising a carton and one or more articles contained in the carton, the carton comprising a base panel, a plurality of side walls panels and a first base insert disposed on the base panel, the first base insert being sized and arranged for encouraging one or more articles to lean over from an upright position to be inclined with respect to the base panel.

Preferably, the first base insert partially covers the base panel and partially extends beneath one or more of said plurality of articles so as to create a step disposed beneath one or more articles.

Preferably, the first base insert comprises an inclined upper surface upon which one or more articles are received.

Preferably, the carton is expandable from a closed position to an open position. Preferably the capacity of the carton is greater in the open configuration than the closed configuration.

Preferably, in the open configuration the sidewalls of the carton are expanded to allow said one or more articles to lean over.

Preferably, in the closed position, side walls of the carton retain the at least one or more articles in a substantially upright position.

## BRIEF DESCRIPTION OF THE DRAWINGS

Exemplary embodiments of the invention will now be described with reference to the accompanying drawings, in which:

FIGURE 1 is a plan view from above of a first blank for forming a base part of a carton according to a first embodiment of the invention;

FIGURE 2 is a plan view from above of a second blank for forming a top cover part of a carton according to a first embodiment of the invention;

FIGURE 3 is a plan view from above illustrating a first stage of assembly of the blank of Figure 1.

FIGURE 4 is a plan view from above illustrating a second stage of assembly of the blank of Figure 1.

FIGURE 5 is a perspective view from above of a base part of a carton assembled from the blank of Figure 1 partially loaded with articles.

FIGURE 6 is a perspective view from above of the base part of the carton assembled from the blank of Figure 1 in a fully loaded configuration.

FIGURE 7 is a perspective view from above of the base part of the carton assembled from the blank of Figure 1 including the insert tool of Figure 10A in which outermost articles are inclined at an angle to the base panel.

FIGURE 8 is a perspective view from above of the base part of the carton assembled from the blank of Figure 1 in which the insert tool of Figures 10A has been deployed to space apart centrally disposed articles.

FIGURE 9 is a perspective view from above and illustrates the base part of the carton of Figure 8 in which ice has been placed in the voids created between the spaced apart articles.

FIGURE 10A is a plan view from above of an insert tool for spacing apart articles.

FIGURE 10B is a plan view from above of a first base insert for use with the blank of Figure 1 or Figure 16.

FIGURE 10C is a plan view from above of a second base insert for use with the blank of Figure 1 or Figure 16.

FIGURE 11 is a perspective view from above of a carton assembled from the blank of Figure 1 in which the base inserts of Figure 10B and 10C have been deployed.

FIGURE 12 is an enlarged perspective view from above of a portion of the carton of Figure 11.

FIGURE 13 is a plan view from above of the base part of the carton of Figure 12 which is fully loaded with articles between which articles ice has been inserted.

FIGURE 14 is a perspective view from above of a flat collapsed partially constructed top cover part formed from the blank of Figure 2.

FIGURE 15 is a perspective view from above of a package assembled from the blank of Figure 1 and the blank of Figure 2.

FIGURE 16 is a plan view from above of a first blank for forming a base part of a carton according to a second embodiment of the invention.

FIGURE 17 is a plan view from above of a second blank for forming a top cover part of a carton according to a second embodiment of the present invention.

FIGURE 18 illustrates the blank of Figure 17 being assembled about the assembled blank of Figure 16.

FIGURE 19 is a perspective view from above and illustrates the carton formed from the blank of Figure 16

FIGURE 20 is a side view of an article placed upon the insert of Figures 21, 22 or 10C.

FIGURE 21 is a plan view of a blank for forming a first base insert according to an alternative embodiment illustrating a first configuration for disposing articles thereon.

FIGURE 22 is a plan view from above of the blank of Figure 21 illustrating an alternative configuration for disposing the articles thereon.

## DETAILED DESCRIPTION OF EXEMPLARY EMBODIMENTS OF THE PRESENT INVENTION

Detailed descriptions of specific embodiments of the package, blanks and cartons are disclosed herein. It will be understood that the disclosed embodiments are merely examples of the way in which certain aspects of the invention can be implemented and do not represent an exhaustive list of all of the ways the invention may be embodied. Indeed, it will be understood that the packages, blanks and cartons described herein may be embodied in various and alternative forms. The figures are not necessarily to scale and some features may be exaggerated or minimised to show details of particular components. Well-known components, material or methods are not necessarily described in great detail in order to avoid obscuring the present disclosure. Any specific structural and functional details disclosed herein are not to be interpreted as limiting, but merely as a basis for the claims and as a representative basis for teaching one skilled in the art to variously employ the invention.

Referring to Figure 1, there is shown a plan view of a first blank 10 for forming a base part 170 of a carton. First blank 10 forms a base part or base element 170 of a carton and can be expanded to accommodate additional items I. For example, the base part can be expanded such that ice can be inserted to cool the carton contents. First blank 10 comprises a base panel 12. In the preferred embodiment base panel 12 is substantially hexagonal in shape; however in alternative embodiments other shapes are envisaged, for example, but not limited to rectangular, square, pentagonal and octagonal. It is envisaged that the first blank 10 is dimensioned so as to accommodate nineteen articles arranged with a central article A about which a first ring of six articles A has been placed. A second ring of twelve articles A is placed around the first ring of six articles A. The notional position of each article A upon the base panel 12 is illustrated by dashed lines in Figure 1.

Turning to the constructional details of the exemplary first blank 10: A first side wall panel 14 is hinged to base panel 12 by fold line 11; a second side wall panel 16 is hinged to base panel 12 by fold line 13; a third side wall panel 18 is hinged to base panel 12 by fold line 15; a fourth side wall panel 20 is hinged to base panel 12 by fold line 17; a fifth side wall panel 22 is hinged to base panel 12 by fold line 19; and a sixth side wall panel 24 is hinged to base panel 12 by fold line 21.

A first inner side wall panel 26 is hinged to first sidewall panel 14 by fold line 37 opposing the hinged connection of the first side wall panel 14 to the base panel 12. Being hexagonal in shape the first blank 10 has five further side wall panels arranged in a similar fashion such that:

Second inner side wall panel 28 is hinged to second sidewall panel 16 by fold line 39 opposing the hinged connection of the second side wall panel 16 to the base panel 12.

Third inner side wall panel 30 is hinged to third sidewall panel 18 by fold line 41 opposing the hinged connection of the third side wall panel 18 to the base panel 12.

Fourth inner side wall panel 32 is hinged to fourth sidewall panel 20 by fold line 31 opposing the hinged connection of the fourth side wall panel 20 to the base panel 12.

Fifth inner side wall panel 34 is hinged to fifth sidewall panel 22 by fold line 33 opposing the hinged connection of the fifth side wall panel 22 to the base panel 12.

Sixth inner side wall panel 36 is hinged to sixth sidewall panel 24 by fold line 35 opposing the hinged connection of the sixth side wall panel 24 to the base panel 12.

Each of the side wall panels 14, 16, 18, 20, 22, 24 is coupled to each of its immediately adjacent and neighbouring side wall panels 14, 16, 18, 20, 22, 24 by web structures 40a, 40b, 40c, 40d, 40e and 40f, which are described in more detail below. In a setup condition the web structures 40a, 40b, 40c, 40d, 40e and 40f form a seal between the side wall panels 14, 16, 18, 20, 22, 24 such that the base part 170 of the carton may retain a fluid or powdered substance. Web structures 40a, 40b, 40c, 40d, 40e and 40f divide at least partially the interior of the carton into compartments. Optionally, the web structures 40a, 40b, 40c, 40d, 40e and 40f may form partition structures between adjacent articles A to separate the articles and prevent, or at least mitigate the effect of, adjacent articles colliding together.

Each inner side wall panel 26, 28, 30, 32, 34, 36 comprises a pocket structure 60d, 60e, 60f, 60a, 60b, 60c, respectively. Each of the pocket structures 60a, 60b, 60c, 60d, 60e, 60f are substantially the same in construction, only one of which will be described in further detail.

Pocket structure 60a comprises a first securing panel 68 hinged to fourth inner side wall panel 32 along a first fold line 70, and a second securing panel 66 hinged to fourth inner side wall panel 32 along a second fold line 72. First and second securing panels 68, 66 are disposed along opposing side edges of the fourth inner side wall panel 32. First and second securing panels 68, 66 are separated from panels forming web structures 40b, 40c disposed on opposing side edges of the fourth side wall panel 20 by a recess, cut line or aperture.

The pocket structure 60a also comprises a cut line or weakened line of severance 62 which extends across fourth inner side wall panel 32 and defines at least in part a pocket panel 64. Cut line 62 extends partially into first and second securing panels 68, 66.

Optionally, the pocket structure 60a may comprise a third fold line 76 disposed within first securing panel 68 extending between the cut line 62 and a free end edge of the first securing panel 68. Third fold line 76 extends substantially perpendicularly to cut line 62 and is preferably disposed substantially at a first end of the cut line 62. The third fold line 76 defines, at least in part, a first displaceable portion 67. A fourth fold line 72 is optionally disposed in second securing panel 66 extending between cut line 62 and a free end edge of the second securing panel 68, again fourth fold line 72 is orientated substantially perpendicular to cut line 62 and is disposed substantially at a secured end thereof. Fourth fold line 72 defines, at least in part a second displaceable portion 69.

Referring again to the web structures 40a, 40b, 40c, 40d, 40e, 40f, since these are substantially the same in structure only one will be described in further detail:

Web structure 40a comprises a first web panel 42 and a second web panel 44 hinged to one another along a fold line 46.

First web panel 42 is hinged to second side wall panel 16 along a fold line 52. Second web panel 44 is hinged to third side wall panel 18 along a fold line 54.

First web panel 42 may optionally include a score line or fold line 56 for facilitating first web panel 42 to fold. Second web panel 44 may also include an optional fold line or score line 58 for facilitating folding of the second web panel 44.

First and second web panels 42, 44 are secured together by a securing means. In this exemplary embodiment, the securing means takes the form of a mechanical locking mechanism.

First web panel 42 includes a first part 48 of a complementary locking mechanism. Second web panel 44 includes a second part 50 of the complementary locking mechanism. First part 48 is preferably a male punch lock tab. Second part 50 is preferably a pair of female punch locking tabs.

In alternative embodiments other securing means can be used for example an adhesive, such as hot melt glue or pressure sensitive glue could be applied to an area of one or both of the first and second web panels 42, 44. In yet another embodiment an area of the first or second web panels 42, 44 may be coated with a material or substance which becomes adhesive on exposure to heat or radiation. In a set up condition the complementary locking mechanism secures a portion of the first web panel 42 to a portion of the second web panel 44.

A remaining portion of the first web panel 42 remains uncoupled or separate from second web panel 44, such that the first web panel 42 and second web panel 44 may be fanned apart as far as the point of engagement or adhesion between the first and second web panels 42, 44.

Figure 2 illustrates a plan view of a second blank 110 for forming a top cover part 195. The top cover part 195 includes a first top panel 124. Preferably first top panel 124 is hexagonal in shape; however, it is envisaged that alternative shapes could be used.

Blank 110 comprises a plurality of side wall panels 112, 114, 116, 118, 120, 122 hinged together in series one to the next: a first side wall panel 112 hinged to a second side wall panel 114 along a fold line 111; a third side wall panel 116 is hinged to the second side wall panel 114 along a fold line 113; a fourth side wall panel 118 is hinged to the third side wall 116 panel along a fold line 115; a fifth side wall panel 120 is hinged to the fourth side wall panel 118 along a fold line 117 and a sixth side wall panel 122 is hinged to the fifth side wall panel 120.

A glue flap 140 is hinged to the sixth side wall panel 122 along a fold line 121.

First top panel 124 is hinged to an end edge of the fourth side wall panel 118 by a fold line 141.

Second top panel 134 is hinged to an end edge of first side wall panel 112 along fold line 135, so that in a set up condition first and fourth side wall panels 112, 118 oppose one another.

A first top end flap 132 is hinged to second side wall panel 114 along fold line 137. Preferably, first top end flap 132 is substantially triangular in shape.

A second top end flap 126 is hinged to third side wall panel 116 along fold line 139. A third top end flap 130 is hinged to sixth side end flap 122 along a fold line 145. A fourth top end flap 128 is hinged to fifth side wall panel 120 along fold line 143.

Each of the second and fourth top end flaps 126, 128 comprises a fold line 127, 129 respectively. Fold lines 127, 129 define, at least in part, an optional overlapping portion 142, 144 which in a setup carton are secured to, and overlap with, the respective one of the first and third top end flaps 132, 130.

The second blank 110 further comprises first and second securing flaps 136, 138 hinged to end edges of the first and fourth side wall panels 112, 118 along fold lines 131, 133 respectively.

Turning to the construction of the base part 170 of the carton as illustrated in Figures 3, 4 and 5, it is envisaged that the carton can be formed by a series of sequential folding operations in a straight line machine so that the carton is not required to be rotated or inverted to complete its construction. Alternatively the carton may be assembled by hand. The folding process is not limited to that described below and may be altered according to particular manufacturing

requirements. An illustration of a method of constructing first blank 10 into base part 170 is shown in Figures 3 to 5.

The first stage is to fold the first and second securing panels 68, 66 into overlapping relationship with the fourth inner side wall panel 32.

Adhesive is applied to the first and second securing panels 68, 66 on outer regions of thereof. The displaceable portions 67, 69 are maintained free from adhesive so as to be displaceable away from the fourth side wall panel 20.

The fourth inner side wall panel 32 is then folded about fold line 31 to be in overlapping relationship with the fourth side wall panel 20. The securing panels 68, 66 are each thereby secured to the fourth side wall panel 20.

Each of the remaining pocket structures 60b, 60c, 60d, 60e, 60f may be constructed in the same way. This pocket construction process is repeated for all of the pocket structures 60b, 60c, 60d, 60e, 60f and optionally may be carried out simultaneously.

Once the pocket structures 60a, 60b, 60c, 60d, 60e, 60f have been constructed, a partly formed flat collapsed carton is created. In this form the flat collapsed carton can be shipped and distributed to an assembly station.

The first blank 10 is constructed into a receptacle by folding each of the side wall panels 14, 16, 18, 20, 22, 24 about their respective fold lines 11, 13, 15, 17, 19, 21 toward the base panel 12.

The web structures 40a, 40b, 40c, 40d, 40e, 40f are then assembled. The web structures 40a, 40b, 40c, 40d, 40e, 40f are each constructed in the same way and this will be described by reference to web structure 40a only.

First web panel 42 and second web panel 44 are folded inwardly of the base part 170 of the carton and to be disposed at an angle to the adjacent second and third side wall panels 16, 18. Preferably, the web structures 40a, 40b, 40c, 40d, 40e, 40f are disposed at angle of 60° with respect to an inner surface of an adjacent side wall panel 14, 16, 18, 20, 22, 24 as best illustrated in Figure 6.

In alternative embodiments where the carton is rectangular or square in shape the web structures are orientated at 45° to the adjacent side wall panels. In alternative embodiments the number of side wall panels will determine the angle between the web structures and the adjacent side wall panels. In particular, angles between 68 and 30 degrees are envisaged.

The first and second web panels 42, 44 are folded to overlay one another by folding them about fold line 46.

Male punch lock element 48 is inserted through female panel lock element 50 to lock the first and second web panels 42, 44 together. Articles A are then inserted into the base part 170 of the carton.

At least one article A is placed into each pocket structure 60a, 60b, 60c, 60d, 60e, 60f. To achieve this, the pocket panel 64is displaced away from the respective side wall panel 14, 16, 18, 20, 22, 24 along the displaceable portions 67, 69such that a space or pocket is formed to receive an article A. In the first embodiment two articles A are placed into each pocket structure as shown in Figure 5.

In addition one or more articles A may be placed centrally upon the base panel 12, as shown in Figure 6; the web structures 40a, 40b, 40c, 40d, 40e, 40f each form a partition structure between a pair of adjacent articles A and optionally serve to divide the carton into compartments. The top cover part 195 once assembled from blank 110 is then placed over the base part 170 to complete the carton.

Top cover panel 195 is formed into a flat collapsed form by a series of folding operations as follows:

Fourth top end flap 128 is folded about fold line 129 such that the overlapping portion 144 is in flat face overlapping relationship with the remainder of the fourth top end flap 128. Glue G may be applied to either the overlapping portion 144 or to third top end flap 130.

Sixth side wall panel 122 is folded about fold line 119 to be in overlapping relationship with fifth side wall panel 120. The third top end flap 130 is secured to the fourth top end flap 128 by the overlapping portion 144 and glue flap 140 partially overlays the fourth side wall panel 118.

Overlapping portion 142 of second top end flap 120 is folded about fold line 127 to be in overlapping relationship with the remainder of second top end flap 126. Glue G is then applied to either the overlapping portion 142 or to first top end flap 132.

Glue G is applied to glue flap 140 or to a corresponding region of first side wall panel 112.

First and second side wall panels 112, 114 are folded together about fold line 113 so that second side wall panel 114 is disposed in overlapping relationship with third side wall panel 116 and first side wall panel 112 is disposed in overlapping relationship with fourth side wall panel 118. First side wall panel 112 is thereby secured to glue flap 140 and first top end flap 132 is secured to the second top end flap 126 by the overlapping portion 142. Glue G is then applied to second top panel 134 or to a corresponding portion of the first top panel 124.

First top panel 124 is folded about a fold line 125 so as to secure first and second top panels 124, 134 together, resulting in the flat collapsed top cover part 195 illustrated in Figure 14.

Tabs 136, 138 may be used to secure the top cover part 195 to the base part 170. In addition they may be grasped or engaged during assembly to slide the top cover part 195 over the base part 170.

Optionally, the base part 170 may be provided with a first base insert 214 disposed on the base panel 12, the first base insert being sized and arranged for encouraging one or more articles A to lean over from an upright position to be inclined with respect to base panel 12. The first base insert 214 may match or complement the base panel 12. In other embodiments, alternative shapes are envisaged; preferably the first base insert is similar in shape to the shape of the base panel 12.

First base insert 214 is smaller than the base panel 12 and is formed from a sheet of material such as paperboard or corrugated board. The first base insert 214 comprises an edge 212. In use, an article A may be placed entirely upon the first base insert 214 or only partially upon the first base insert 214 as shown in Figures 11 and 12.

When articles A are only partially disposed upon the first base insert 214, the first base insert 214 encourages the articles A to lean over or to be inclined with respect to the base panel 12 such that the articles A are reclined from a vertical position; this is best shown in Figures 12 and 20. It is envisaged that more than one article A may be placed around the edge of the first base insert 214 as shown in Figure 11, such that the articles A lean away from one another so as to create a space into which additional items I such as ice may be placed. Other means for displacing the position of the articles A may be used to encourage the articles to move into a space creating arrangement.

A second base insert 314 as illustrated in Figure 10B may be placed centrally upon the first base insert 214 as shown in Figures 11 and 12.

It is envisaged that second base insert 314 may define an edge 312 against which articles A are placed, the second base insert 314 prevents articles A moving into the central space of the carton, thereby reserving a space into which additional items I may be placed.

Alternatively, the second base insert 314 may be utilised in the same way as the first base insert 214 when articles A are stacked about the edges thereof to create an unlevel surface for those articles A.

A further optional insert tool 410 as illustrated in Figure 10A may be used as a spacer element to space a central article A from one or more adjacent articles A; preferably six articles A are disposed thereabout.

The insert tool 410 comprises a central aperture 418 such that the insert tool is substantially annular in shape; the central aperture 418 is sized and arranged to accommodate an article A.

The outer edge of the insert tool 410 may optionally comprise one or more arcuate recesses 416 shaped to accommodate an article A. In the illustrated embodiment, the insert tool 410 comprises six arcuate recesses, each shaped to accommodate an article A. In alternative embodiments, alternative configurations are envisaged.

The inner edge of the annular insert tool 410 may optionally comprise one or more tabs 414 foldable out of the plane of the annular ring. Tabs 414 may be utilised to engage an article A placed in vertical registry with the central aperture 418. The insert tool 410 may be placed upon the central article in the carton at an upper end thereof as shown in Figure 7; a user may deploy the insert tool 410 by sliding the insert tool 410 down the central article A forcing the adjacent articles A outwards away from the central article A.

A user may gain access to the contents of the carton by removing the top cover part 195 as shown in Figure 19 for example.

The side wall panels 14, 16, 18, 20, 22, 24 of the carton can be spread outwardly away from a substantially perpendicular orientation to the base panel 12 to be inclined with respect thereto.

Articles A located within the pocket structures 60a, 60b, 60c, 60d, 60e, 60f are reclined away from a vertical orientation. The sides of the articles A in the pocket structures 60a, 60b, 60c, 60d, 60e, 60f remain substantially in contact with the side wall panels 14, 16, 18, 20, 22, 24.

When one of the optional base inserts of Figures 10B, 10C, 21 or 22 is present, the articles A are encouraged to spread outwardly by the virtue of the uneven surface upon which they are at rest, when the base part 170 is in an open configuration as illustrated in Figure 7. However, when the base part 170 is in a closed configuration as illustrated in Figure 6, the side walls support the outermost articles and prevent them from leaning over, thereby maintaining them in a vertical orientation.

Referring now to Figures 16 and 17, there is shown an alternative embodiment of the present invention. In this alternative embodiment, like numerals have, where possible, been used to denote like parts, albeit with the addition of the prefix "500" or "600" and so on to indicate that these features belong to the second embodiment. The alternative embodiments share many common features with the first embodiment and therefore only the differences from the embodiment illustrated in Figures 1 to 15 will be described in any greater detail.

Figure 16 and 17 illustrate a first blank 510 and a second blank 610 for forming a carton according to a second embodiment of the invention. It is envisaged the first blank 510 is dimensioned so as to accommodate seven articles, arranged with a central article A about which a first ring of six articles A has been placed, the position of each article being illustrated by dashed lines.

The carton of the second embodiment is sized and arranged to accommodate a single article A in each pocket structure 560a, 560b, 560c, 560d, 560e, 560f. Seven are placed within the carton; a first article A is placed centrally and six articles are disposed around the central article A. Each of the six articles A is placed within a respective pocket structure 560a associated with a respective side wall panel 514, 516, 518, 520, 524.

The web structures 540a, 540b, 540c, 540d, 540e, 540f define compartments or portions between the six outer articles A.

The top cover 589 is placed over the base part 590 which base part 590 is thereby maintained in a closed configuration as shown in Figure 18.

When the top cover part 589 is removed as shown in Figure 19, the base part 590 automatically expands outwardly similar to the petals of a flower bud opening.

The central article A remains in an upright orientation whilst the six outer articles A lean outwardly away from the central articles A as illustrated in Figure 19 and 20.

Figures 21 and 22 illustrate an optional third base insert 710; the third base insert 710 is star shaped. Having six points 712 preferably, the third base insert has the shape of a hexagram. In the preferred embodiment an article A is placed between each pair of points 712 of the third base insert 710; and a further article A is placed at the centre upon the third base insert 710 as illustrated in Figure 21.

It is envisaged that the third base insert 710 could be used with the carton of the second embodiment in the same manner as the first base insert 214 is used within the carton of the first embodiment to encourage the articles A to lean over, away from the centre of the carton as illustrated in Figure 20.

Alternatively, the articles A may be placed upon each of the points 712 of the star of the third base insert 710 as illustrated in Figure 22.

The third base insert could be modified in alternative embodiments to comprise more points so as to accommodate a larger number of articles, or dimensioned to accommodate more than one article A per point.

It is envisaged that the third base insert 710 may be used in combination with either of the first base insert 214 or second base insert 314.

It can be appreciated that various changes may be made within the scope of the present invention, for example, the size and shape of the panels and apertures may be adjusted to accommodate articles of differing size or shape. It is envisaged the first and/or second may be integral with the first blank and may be folded into position upon the base panel. It is further envisaged that the first and second blanks may be integrally formed.

It will be recognised that as used herein, directional references such as "top", "bottom", "front", "back", "end", "side", "inner", "outer", "upper" and "lower" do not limit the respective panels to such orientation, but merely serve to distinguish these panels from one another. Any reference to hinged connection should not be construed as necessarily referring to a single fold line only; indeed it is envisaged that hinged connection can be formed from one or more of the following, a short slit, a frangible line or a fold line without departing from the scope of the invention.

## CLAIMS

1. A carton for containing one or more articles which carton comprises a base part having a base panel and a plurality of side wall panels wherein a first side wall panel is coupled to a second side wall panel by a first and a second web panel and wherein said first and second web panels are hinged to one another by a first fold line, the first web panel is hinged to said first side wall panel by a second fold line and the second web panel is hinged to the second side wall panel by a third fold line and wherein the first web panel is secured to the second web panel at a position distal from said second and third fold lines so as to allow the first and second sidewall panels to be moved from a closed position in which the first and second web panels abut one another to an open position in which the first and second web panels are fanned apart.

2. A carton according to claim 1 wherein the first and second web panels are secured together by a mechanical lock.

3. A carton according to claim 2 wherein the mechanical lock comprises a male part and a female part which female part receives a portion of the male part.

4. A carton according to claim 1 wherein the first and second web panels are partially secured together by adhesive.

5. A carton according to any of claims 1 to 4 wherein the first and second web panels each comprise a fold line or score line for facilitating fanning apart of the first and second web panels.

6. A carton according to claim 5 when dependent on claim 2 wherein the male and female part are located on a respective score lines of the first and second web panels.

7. A carton according to any of claims 1 to 6 wherein there further comprises a top cover which holds the base part in the closed configuration.

8. A carton according to any of claims 1 to 7 wherein the first and second web panels extend into a void defined in part by the first and second side wall panels.

9. A carton according to any of claims 1 to 8 wherein the plurality of side panels define a void, and each of said plurality of side panels defines a vertex with another adjacent one of said plurality of side panels wherein a pair of web panels couples each of said plurality of side panels to an adjacent one of said plurality of side panels, each pair of web panels extending from each vertex into the void

10. A carton according to any of claims 1 to 9 wherein the web panels are each disposed in a single plane at an acute angle relative to the adjacent side wall panel.

11. A carton according to claim 10 wherein the angle is less than 68 degrees and no less than 30 degrees.

12. A carton according to claim 11 wherein the angle is 60 degrees or 45 degrees.

13. A carton according to any of claims 8 to 12 wherein adjacent pairs of the first and second web panels define a compartment for receiving one or more articles within the carton.

14. A carton according to claim 13 wherein the adjacent pairs of the first and second web panels form partition structure between a pair of adjacent articles within the carton.

15. A carton according to any of claims 1 to 14 wherein the carton comprises pocket structures for receiving one or more articles.

16. A carton according to any of claims 1 to 15 comprising an insert tool for spacing apart one or more articles.

17. A carton according to claim 16 wherein the insert tool comprises an aperture for receiving an article and an outer edge for engaging with an adjacent article.

18. A carton according to either of claims 16 or 17 wherein the insert tool is substantially annular in shape.

19. A carton according to any of claims 15 to 18 wherein the insert tool comprises one or more recesses disposed about an outer edge for receiving a respective portion of one or more articles.

20. A carton according to any of claims 16 to 19 wherein the insert tool comprises one or more tabs disposed about the aperture for engaging with an article.

21. An insert tool for spacing apart one or more articles held within a carton the insert tool comprising an aperture for receiving an article and an outer edge for engaging with an adjacent article.

22. An insert tool according to claim 21 which is substantially annular in shape.

23. An insert tool according to either of claims 21 or 22 wherein the insert tool comprises one or more recesses disposed about an outer edge for receiving a respective portion of one or more articles which recesses are shaped in a manner complementary with the shape of an article.

24. An insert tool according to any of claims 21 to 23 wherein the insert tool comprises one or more tabs disposed about the aperture for engaging with said article.

25. A carton for containing a plurality of articles which carton comprises a base panel and a plurality of side wall panels wherein each of said plurality of sidewall panels is coupled to an adjacent sidewall panel by a pair of gusset panels which gusset panels extend into the carton to define compartments each for receiving one or more articles.

26. A carton according to claim 25 wherein each of the gusset panels is disposed in a single plane at an angle relative to an adjacent side wall panel.

27. A carton according to claim 26 wherein the angle is less than 68 degrees and no less than 30 degrees.

28. A carton according to claim 27 wherein the angle is 60 degrees or 45 degrees.

29. A carton according to any of claims 25 to 28 wherein the pairs of the gusset panels each defines a partition between a pair of adjacent articles.

30. A carton for containing one or more articles which carton comprises a base panel and a plurality of side wall panels wherein at least one side wall panel comprises a pocket comprising a first panel hinged to a second panel which is hinged to a third panel, wherein said first and third panels are each folded into overlapping relationship with the second panel, end most portions of the first and third panels are secured to said at least one side wall panel, portions of the first and third panels adjacent the second panel being free to be displaced away from said at least one wall such that the one or more articles are receivable within the pocket.

31. A blank for forming a pocket structure which blank comprises an outer side wall panel hinged to an inner side wall panel along a fold line disposed along an end edge, wherein the inner side wall panel is hinged to first and second securing panels along opposing side edges thereof, the inner side panel comprising a cutline extend across the inner side wall panel, the cutline extending partially into the first and second securing panels to define in part displaceable portions therein.

32. A blank according to claim 31 where the securing panels comprise a fold line or score line disposed at an end edge of the cutline for facilitating folding of the displaceable portions.

33. A carton for receiving one or more articles, in particular in accordance with any of claims 1 to 20 and 25 to 30, the carton comprising a base panel, a plurality of side walls panels and a first base insert disposed on the base panel, the first base insert being sized and arranged for encouraging one or more articles when present in the carton to lean over from an upright position to be inclined with respect to the base panel.

34. A carton for receiving one or more articles, the carton comprising a base panel, a plurality of side walls panels and a first base insert disposed on the base panel, the first base insert being sized and arranged for encouraging one or more articles when present in the carton to lean over from an upright position to be inclined with respect to the base panel.

35. A carton according to either claim 33 or 34 wherein the first base insert partially covers the base panel to create a step.

36. A carton according to any of claims 33 to 35 wherein the first base insert is shaped similarly to the base panel of the carton.

37. A carton according to claim 35 or 36 wherein the first base insert is smaller in dimension than the base panel of the carton.

38. A carton according to either claim 33 or 34 wherein the first base insert comprises an inclined upper surface for receiving one or more articles.

39. A carton according to any one of claims 33 to 38 wherein the first base insert is secured to the base panel.

40. A carton according to claim 39 wherein the first base insert is secured with adhesive.

41. A carton according to any of claims 33 to 40 wherein the first base insert is disposed in flat face contacting relationship with the base panel.

42. A carton according to any of claims 33 to 41 wherein the first base insert is hexagonal in shape.

43. A carton according to any of claims 33 to 41 wherein the first base insert is star shaped.

44. A carton according to claim 43 wherein the first base insert is a six pointed star such as a hexagram.

45. A carton according to any of claims 33 to 44 wherein there comprises a second base insert preferably, placed on top of the first base insert.

46. A carton according to claim 45 wherein the second base insert is used as a spacer means and comprises a side edge for abutting one or more articles.

47. A package comprising a carton and one or more articles contained in the carton, the carton comprising a base panel, a plurality of side walls panels and a first base insert disposed on the base panel, the first base insert being sized and arranged for encouraging one or more articles to lean over from an upright position to be inclined with respect to the base panel.

48. A package according to claim 47 wherein the first base insert partially covers the base panel and partially extends beneath one or more of said one or more of articles so as to create a step disposed beneath said one or more articles.

49. A package according to claim 47 wherein the first base insert comprises an inclined upper surface upon which one or more articles are received.

50. A package according to any of claim 47 to 49 wherein the carton is expandable from a closed position to an open position wherein the capacity of the carton is greater in the open position.

51. A package according to claim 50 wherein in the open configuration the sidewalls of the carton can be expanded to allow said one or more articles to lean over outwardly form the centre of the carton.

52. A package according to either claim 50 or 51 where, in the closed position, side walls of the carton retain the at least one or more articles in a substantially upright position.

53. One or more blanks for forming the carton as described in any preceding claim.

54. A carton for packaging articles substantially as described herein with reference to and/or as illustrated by the accompanying Figures.

55. A blank or part formed blank for forming a carton, the blank or part formed blank substantially as described herein with reference to and/or as illustrated by the accompanying Figures.

56. A package comprising articles substantially as described herein with reference to and/or as illustrated by the accompanying Figures.

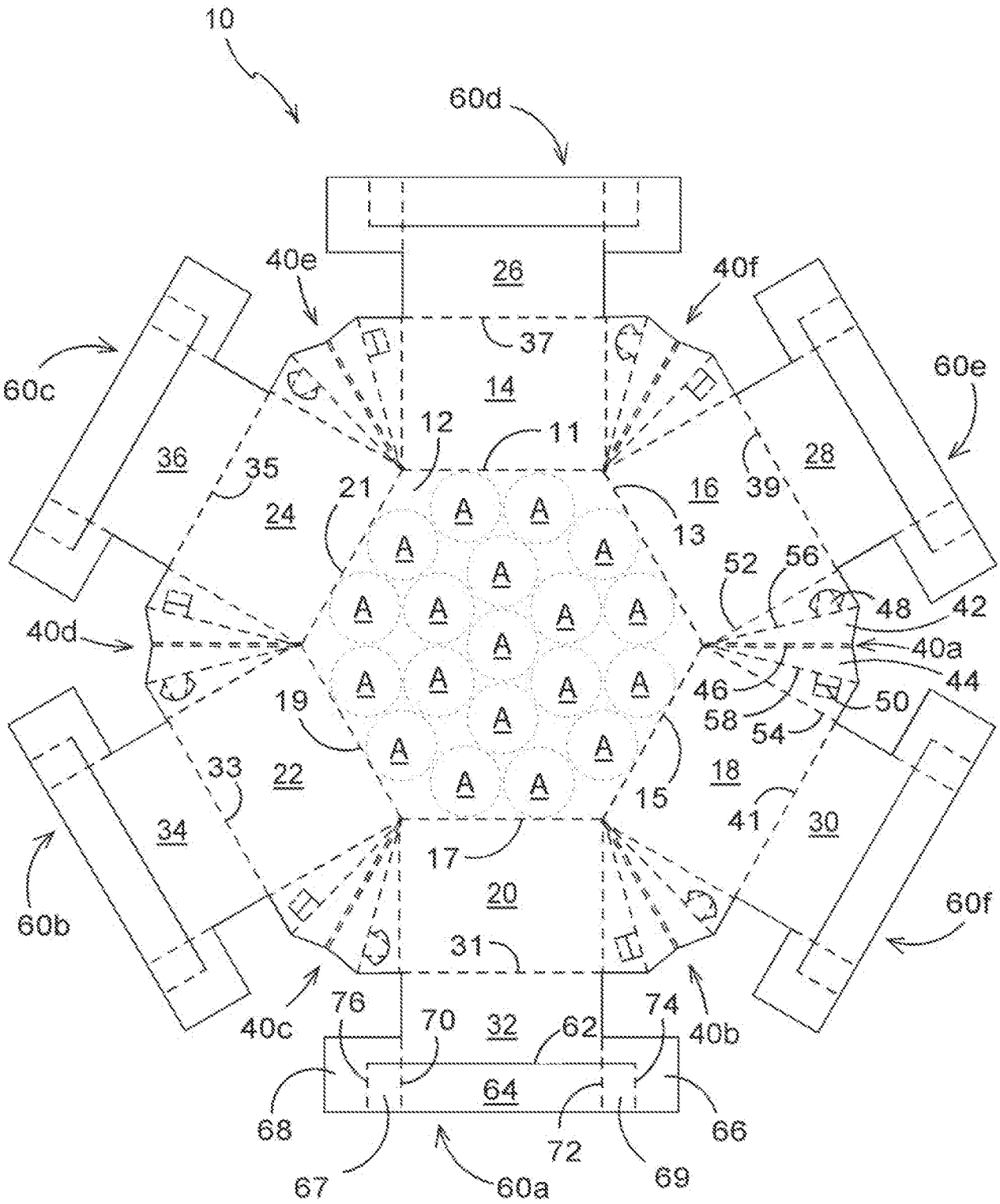
10
60d
26
40e
40f
37
14
60c
60e
12
11
36
35
28
39
16
21
24
13
52
56
48
42
40d
40a
44
46
50
58
54
19
33
22
18
15
41
30
34
17
20
60b
60f
31
40c
76
70
32
62
74
40b
64
68
66
72
67
60a
69

FIGURE 1

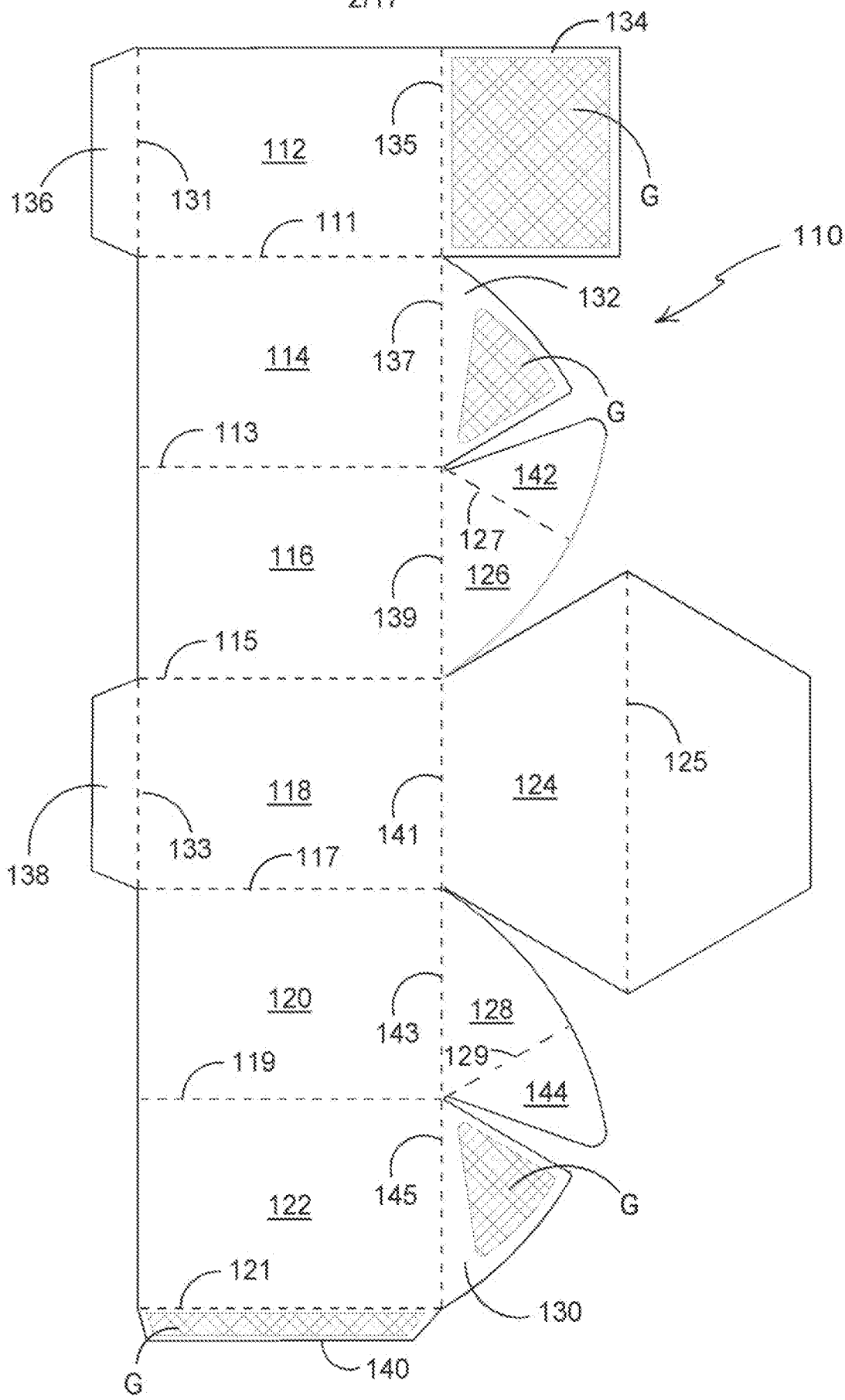
134
135
112
136
131
G
111
110
132
137
114
G
113
142
127
116
126
139
115
125
118
124
141
138
133
117
120
143
128
129
119
144
145
122
G
121
130
140
G

FIGURE 2

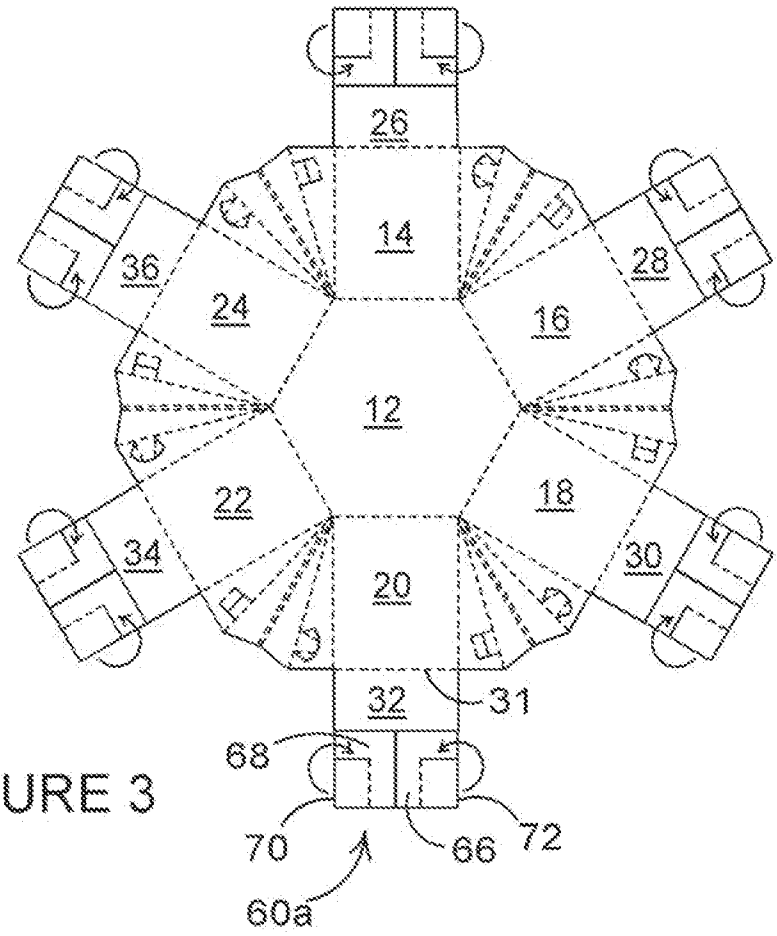


FIGURE 3

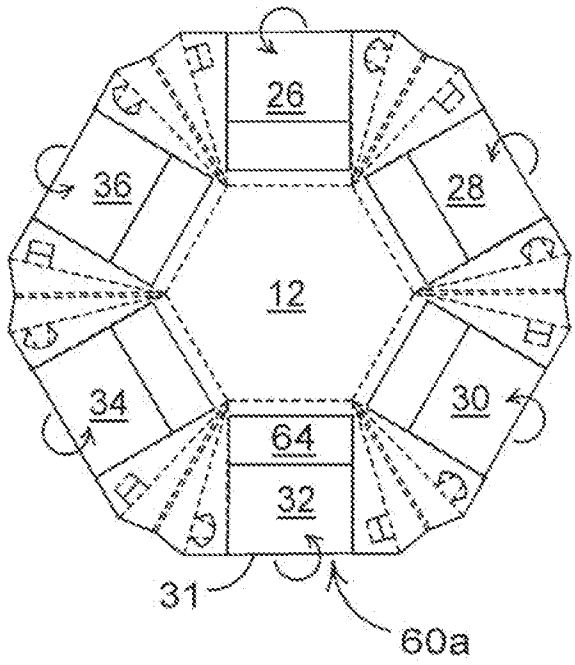


FIGURE 4

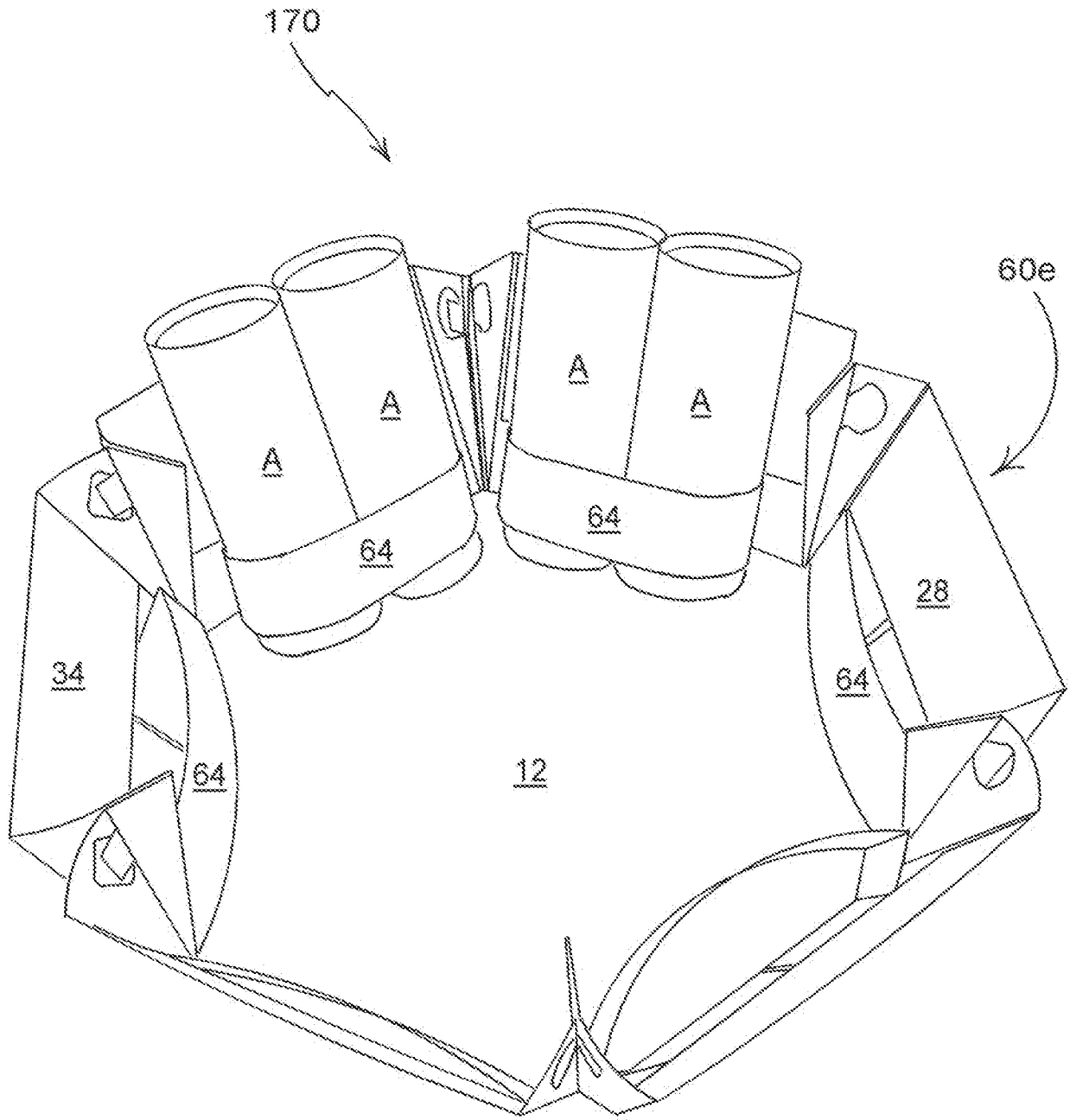


FIGURE 5

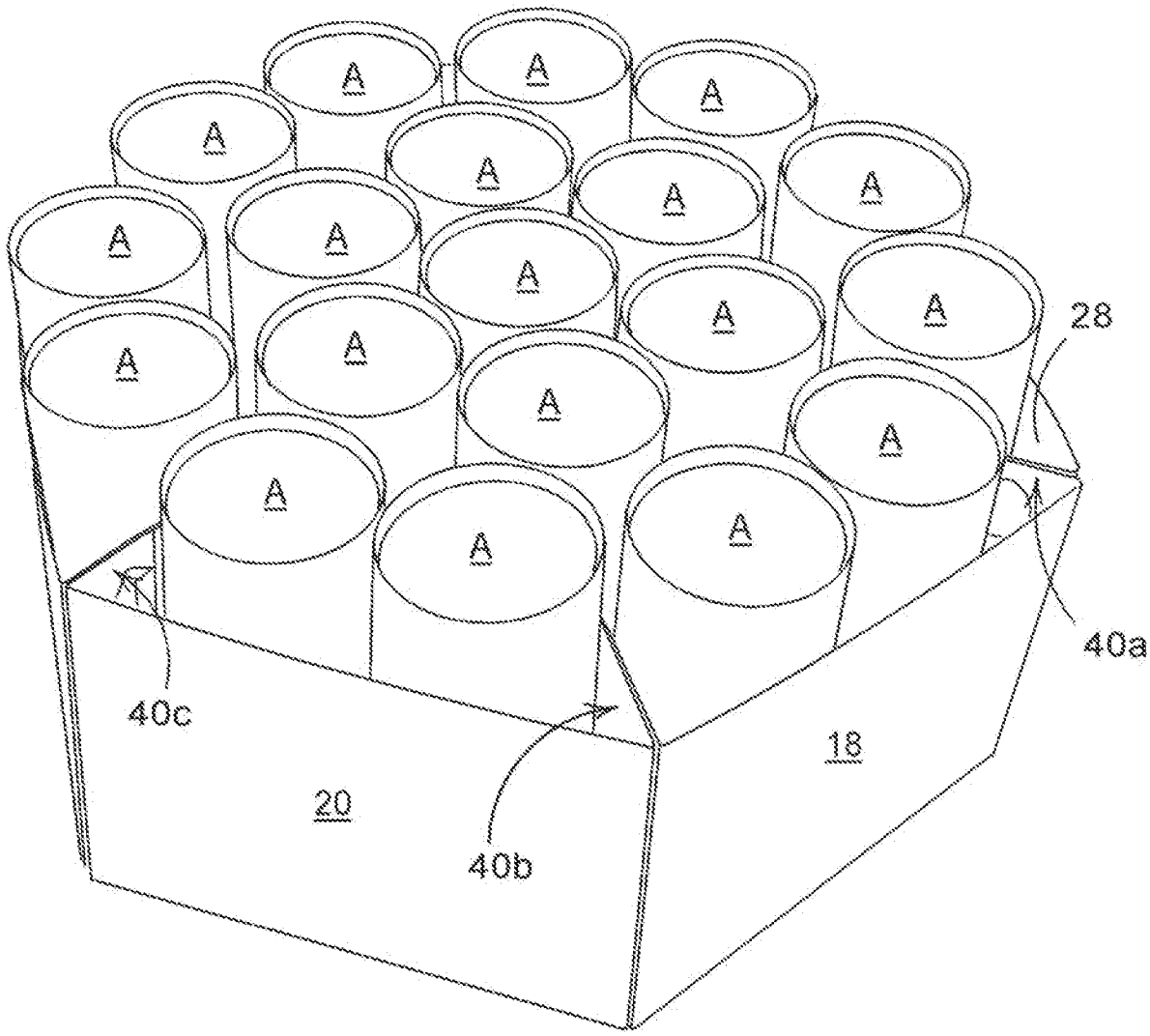


FIGURE 6

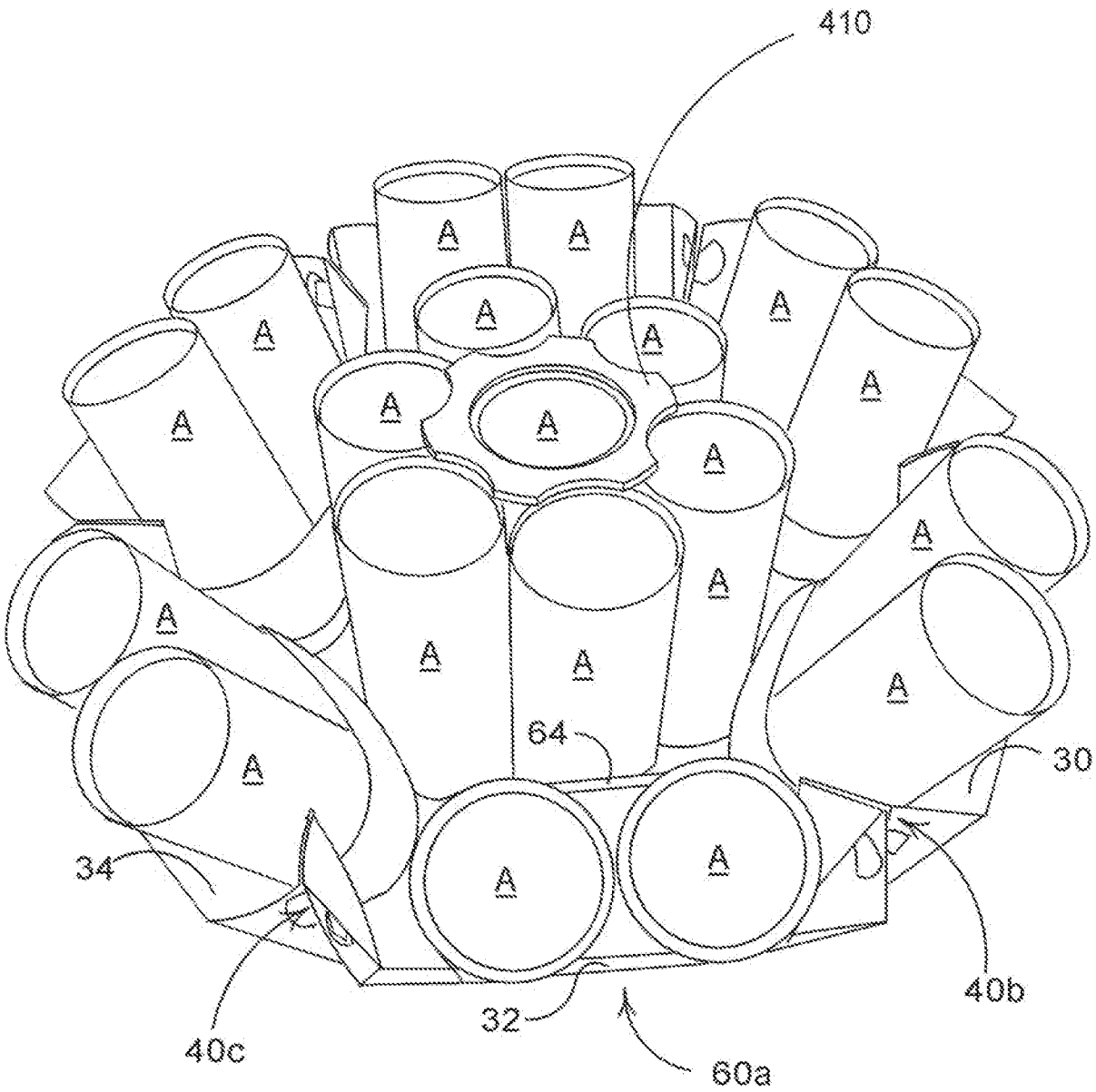


FIGURE 7

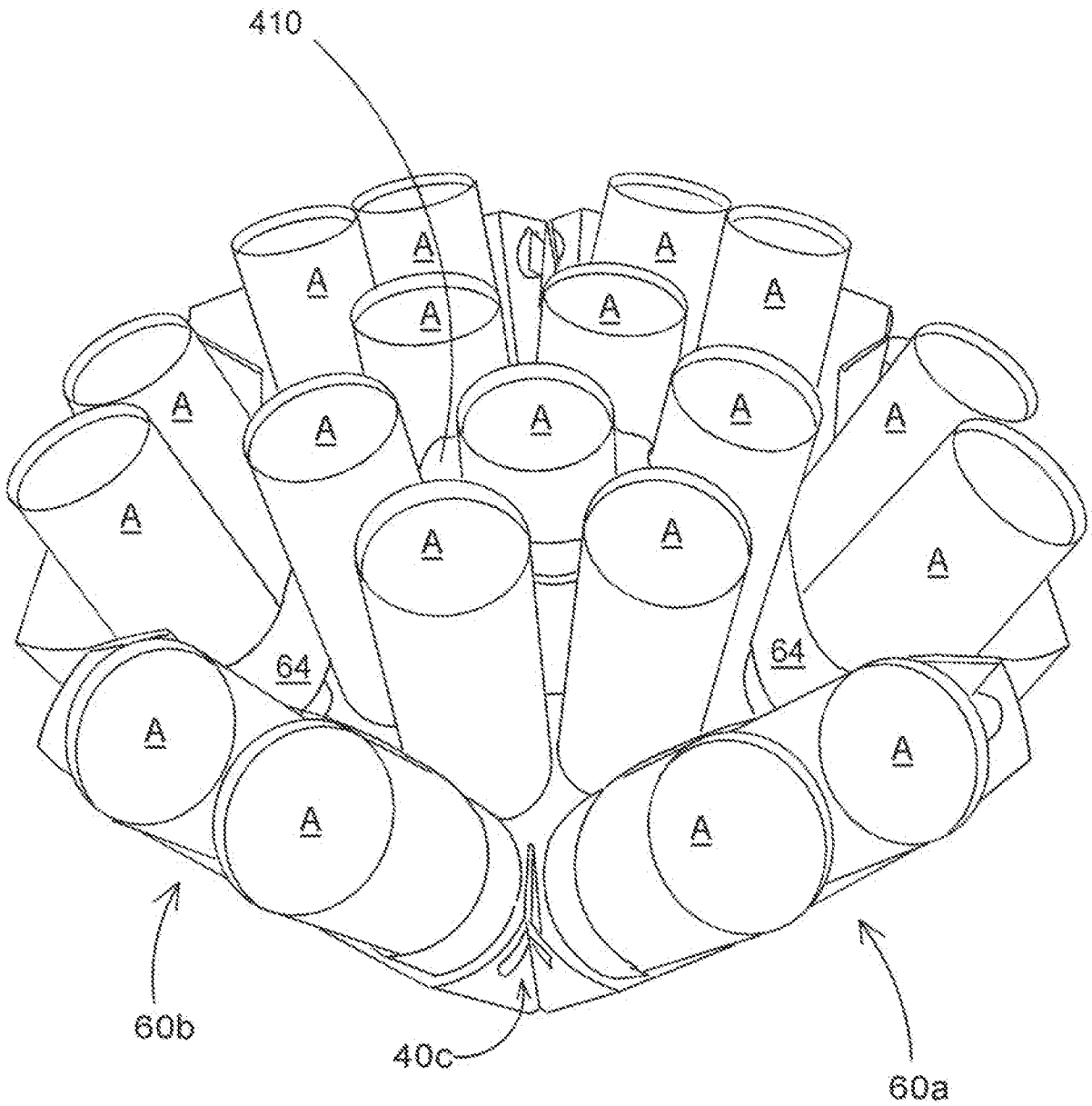


FIGURE 8

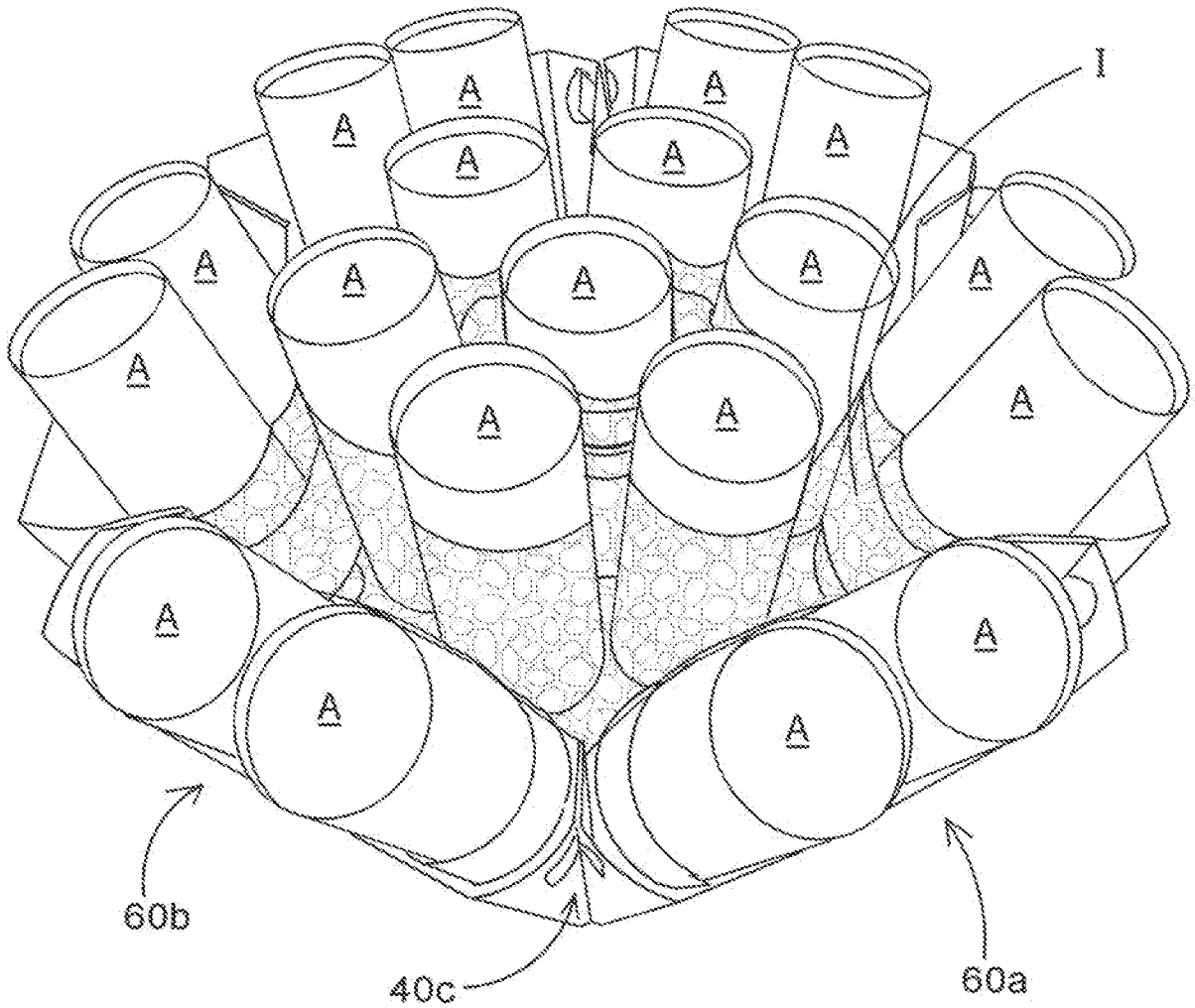


FIGURE 9

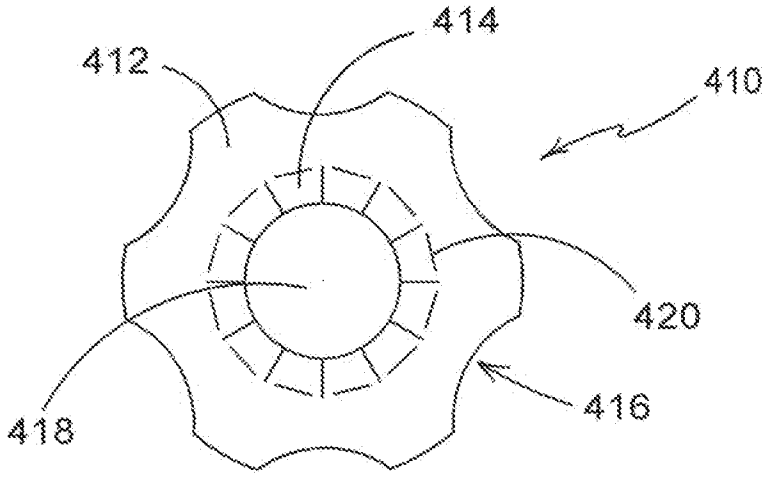


FIGURE 10A

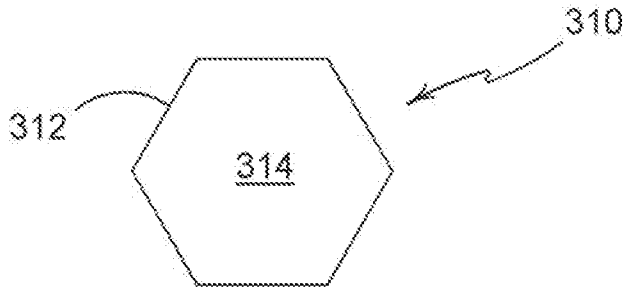


FIGURE 10B

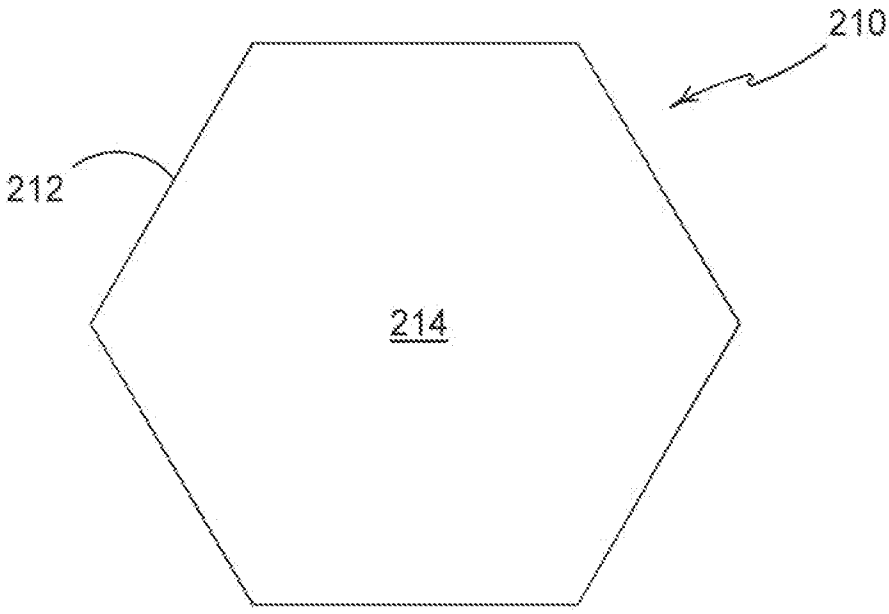


FIGURE 10C

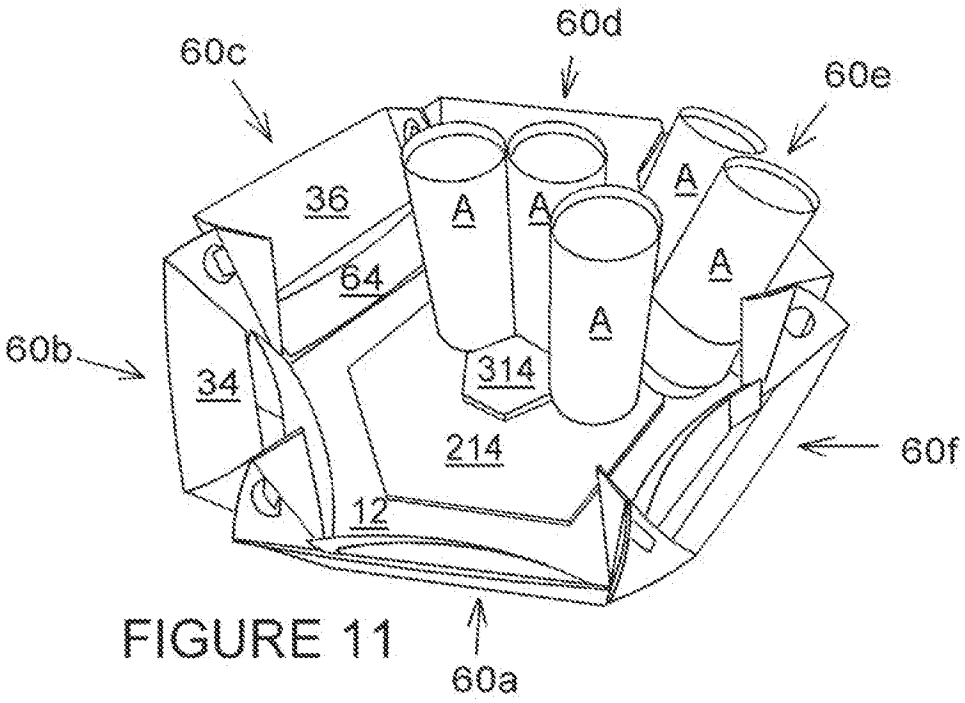


FIGURE 11

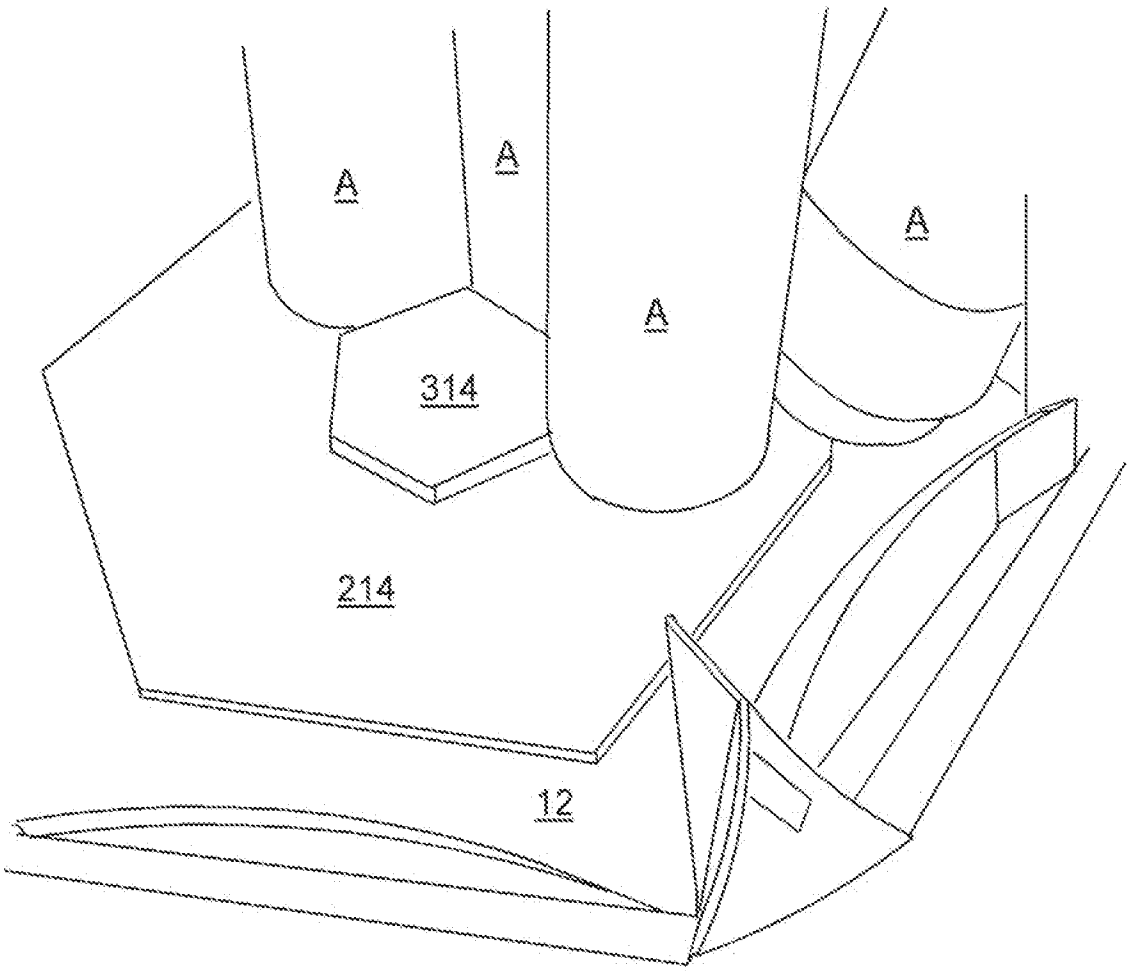


FIGURE 12

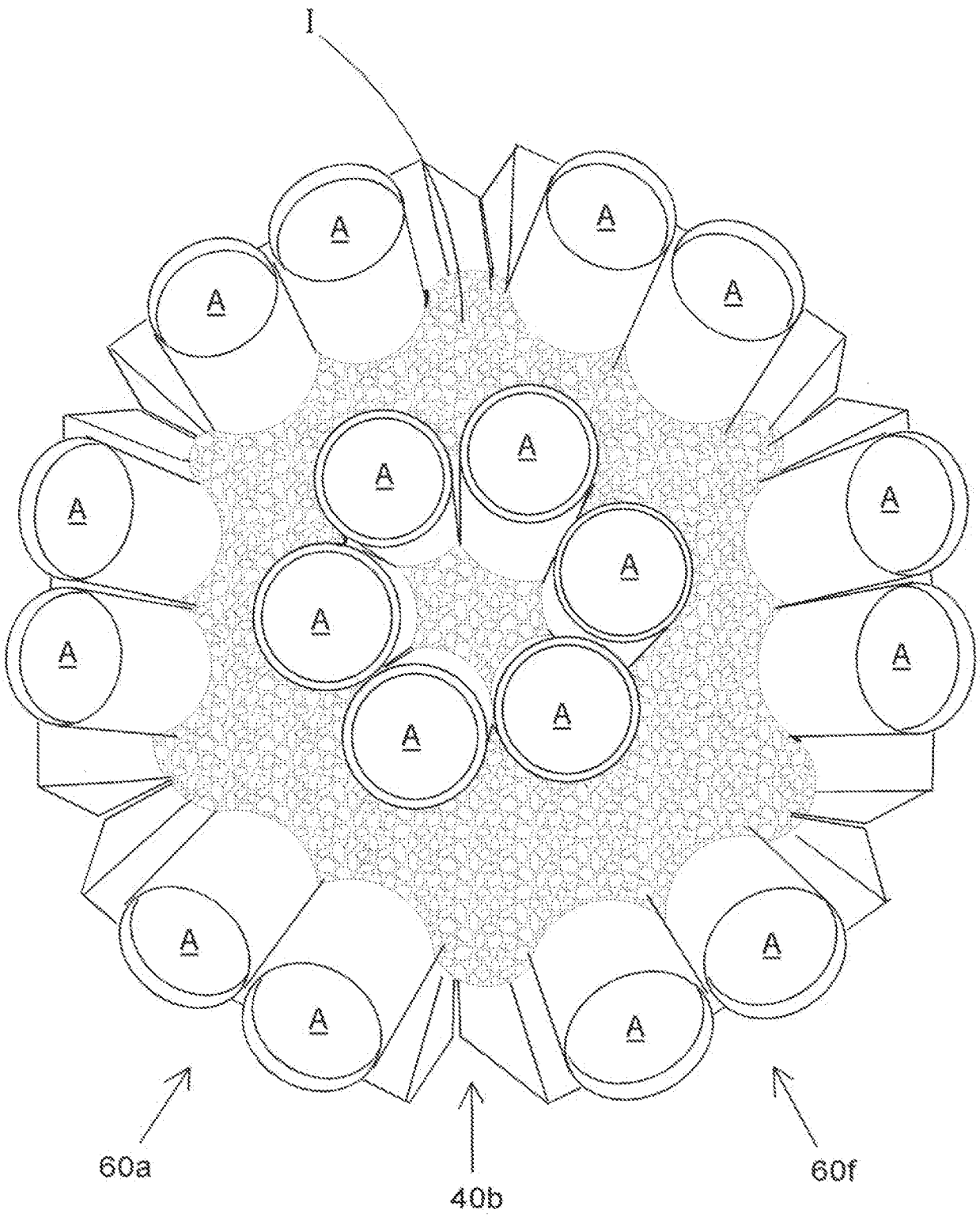


FIGURE 13

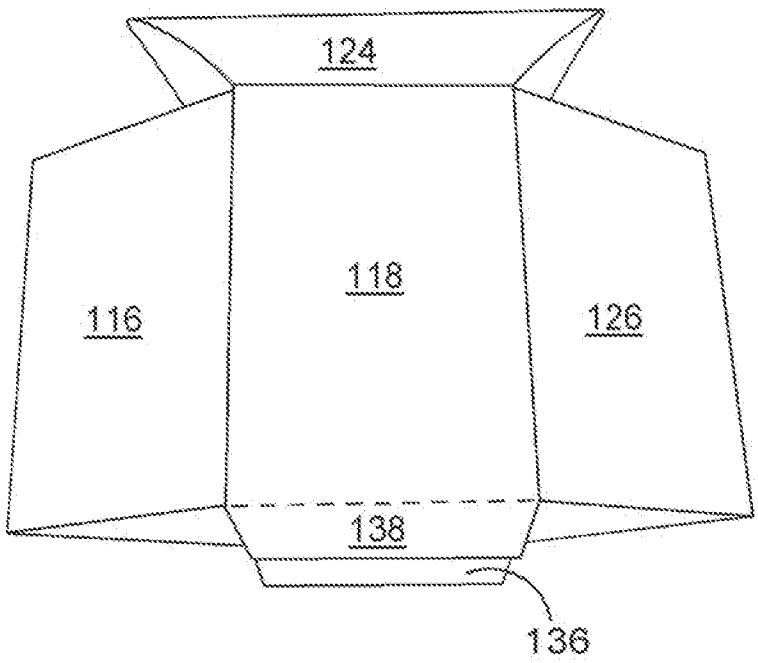


FIGURE 14

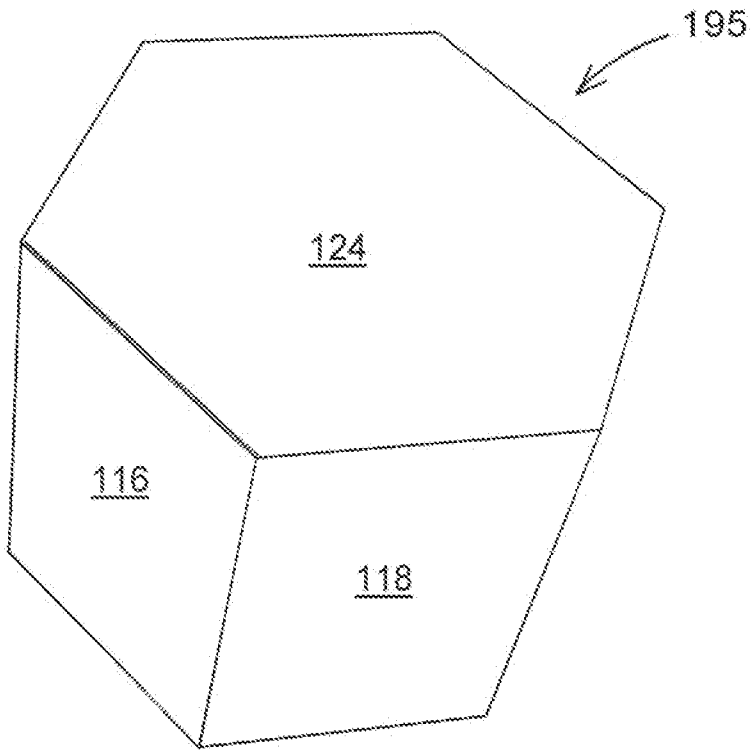


FIGURE 15

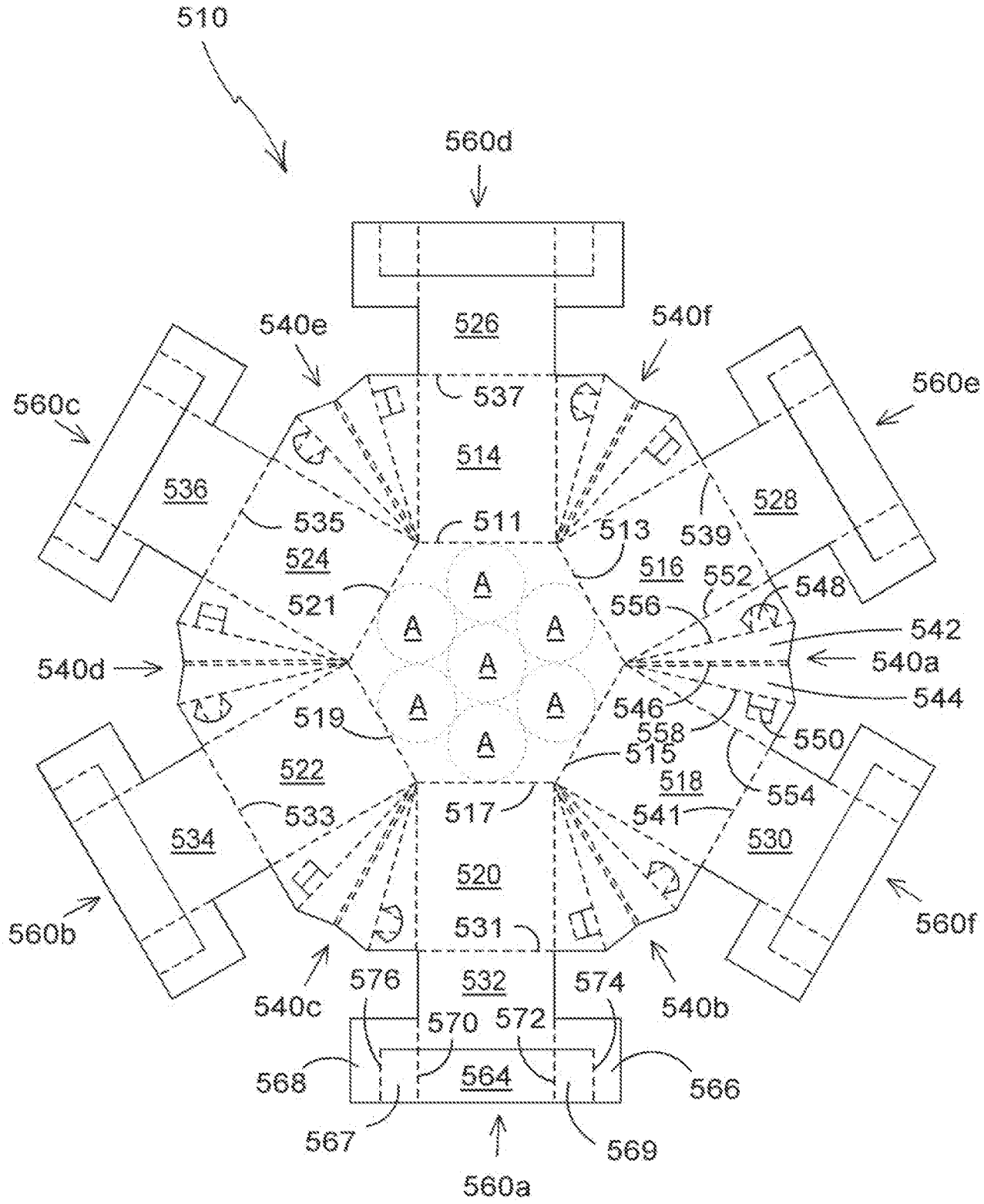
510
560d
526
540e
540f
560c
560e
536
537
514
528
535
511
513
539
524
516
552
548
521
556
542
540d
540a
544
519
546
558
550
515
522
518
554
533
517
541
534
530
520
560b
560f
531
576
532
574
540c
540b
570
572
568
564
566
567
569
560a

FIGURE 16

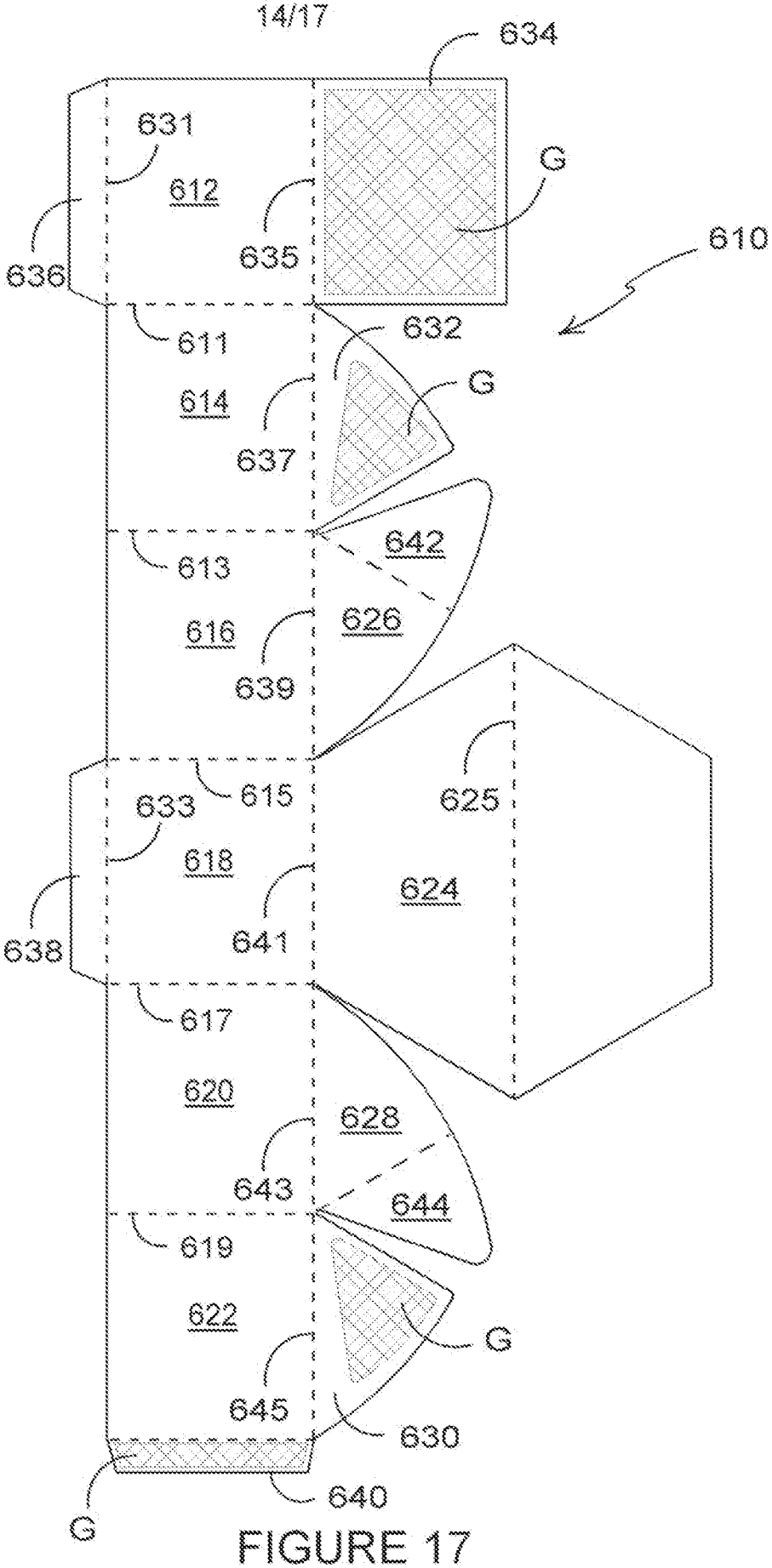
634
631
612
G
635
636
610
611
632
614
G
637
642
613
626
616
639
625
615
633
618
624
638
641
617
620
628
643
644
619
622
G
645
630
640
G

FIGURE 17

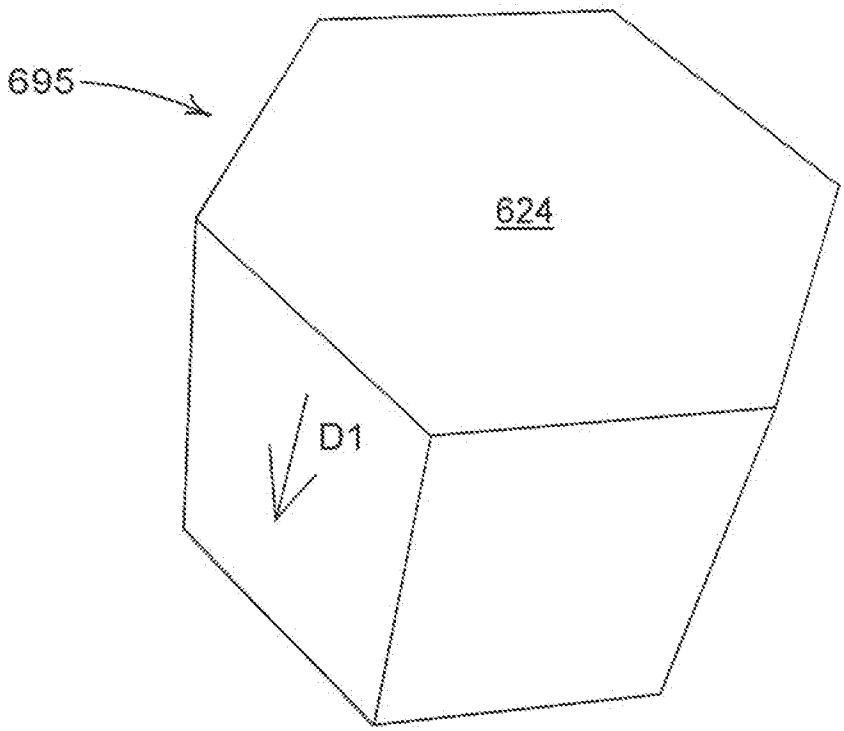


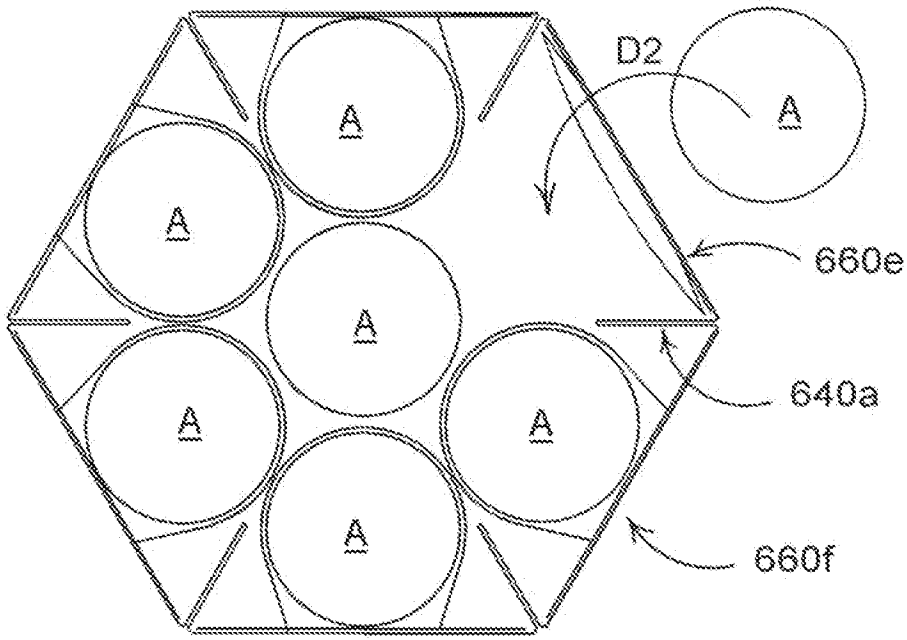


FIGURE 18

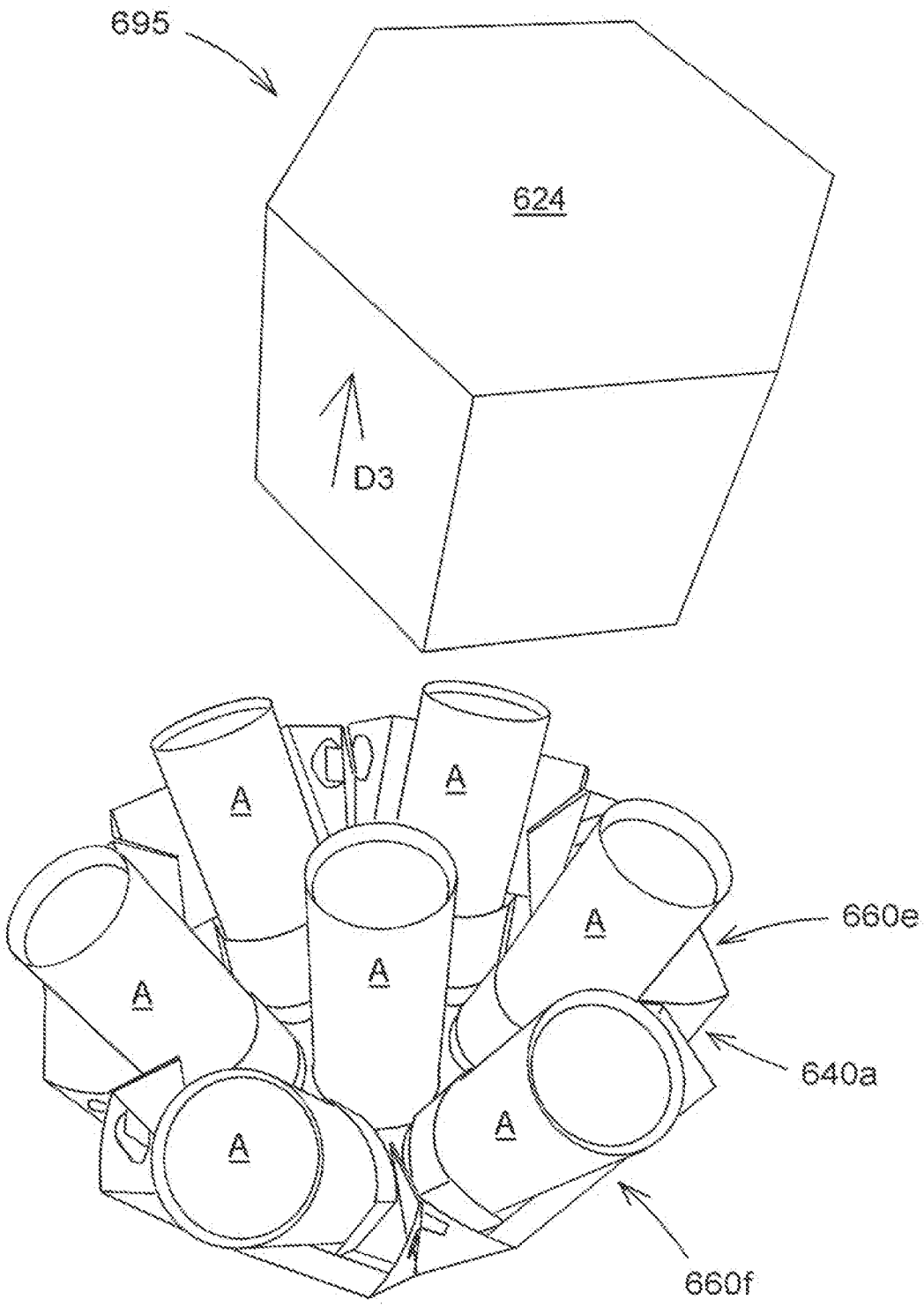


FIGURE 19

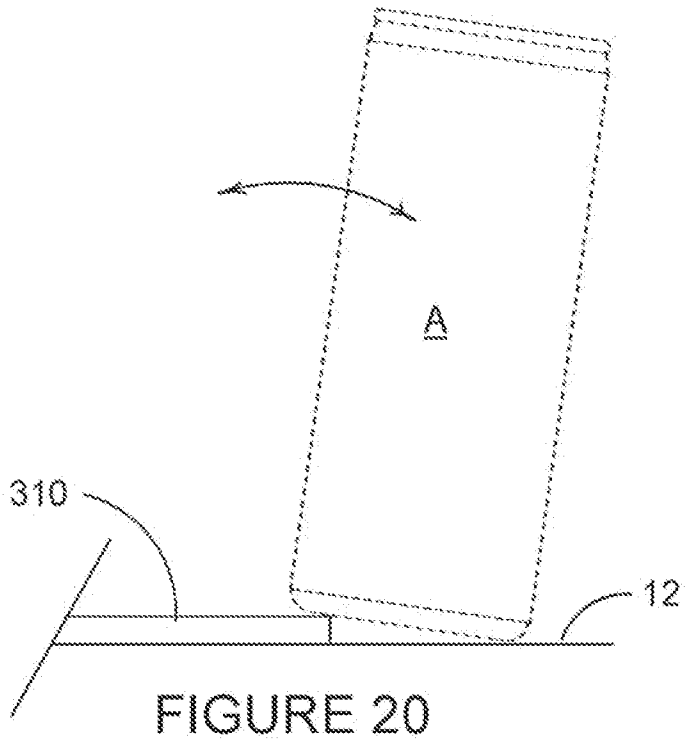


FIGURE 20

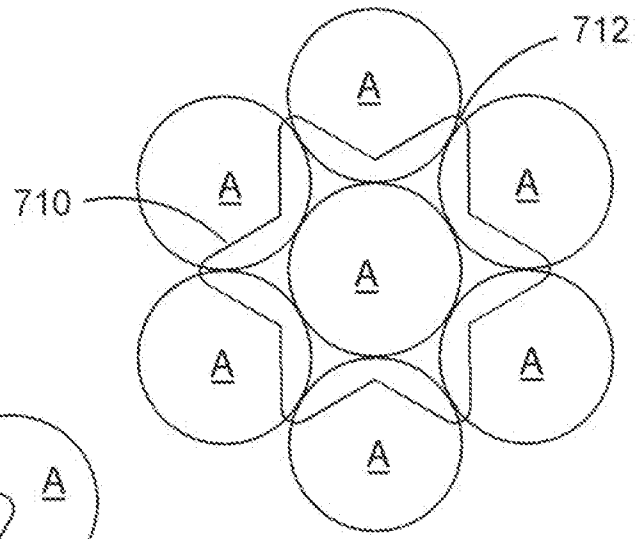


FIGURE 21

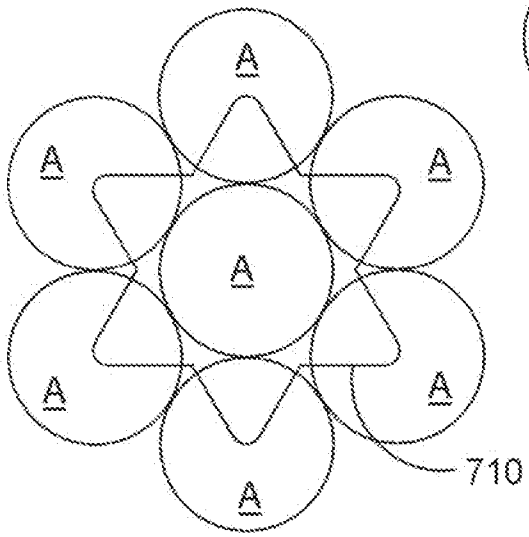


FIGURE 22

# INTERNATIONAL SEARCH REPORT

International application No
PCT/US2011/046716

A. CLASSIFICATION OF SUBJECT MATTER
INV. B65D5/00 B65D5/20 B65D5/24 B65D71/12 B65D5/50
ADD.

According to International Patent Classification (IPC) or to both national classification and IPC

B. FIELDS SEARCHED

Minimum documentation searched (classification system followed by classification symbols)
B65D

Documentation searched other than minimum documentation to the extent that such documents are included in the fields searched

Electronic data base consulted during the international search (name of data base and, where practical, search terms used)
EPO-Internal

C. DOCUMENTS CONSIDERED TO BE RELEVANT

| Category* | Citation of document, with indication, where appropriate, of the relevant passages | Relevant to claim No. |
|---|---|---|
| X | US 1 020 878 A (BENDELARI A)<br>19 March 1912 (1912-03-19)<br><br>the whole document | 1-3,<br>7-14,<br>25-29,<br>53-56 |
| | ----- | |
| X | US 3 119 494 A (ROSENSTIEL LEWIS S)<br>28 January 1964 (1964-01-28)<br><br>column 1, line 65 - column 3, line 22;<br>figures 1-5 | 1,2,5,6,<br>8-14,<br>25-29,<br>53-56 |
| | ----- | |
| | -/-- | |

[X] Further documents are listed in the continuation of Box C.

[X] See patent family annex.

* Special categories of cited documents :

"A" document defining the general state of the art which is not considered to be of particular relevance

"E" earlier document but published on or after the international filing date

"L" document which may throw doubts on priority claim(s) or which is cited to establish the publication date of another citation or other special reason (as specified)

"O" document referring to an oral disclosure, use, exhibition or other means

"P" document published prior to the international filing date but later than the priority date claimed

"T" later document published after the international filing date or priority date and not in conflict with the application but cited to understand the principle or theory underlying the invention

"X" document of particular relevance; the claimed invention cannot be considered novel or cannot be considered to involve an inventive step when the document is taken alone

"Y" document of particular relevance; the claimed invention cannot be considered to involve an inventive step when the document is combined with one or more other such documents, such combination being obvious to a person skilled in the art.

"&" document member of the same patent family

| Date of the actual completion of the international search | Date of mailing of the international search report |
|---|---|
| 20 October 2011 | 02/01/2012 |

| Name and mailing address of the ISA/ | Authorized officer |
|---|---|
| European Patent Office, P.B. 5818 Patentlaan 2<br>NL - 2280 HV Rijswijk<br>Tel. (+31-70) 340-2040,<br>Fax: (+31-70) 340-3016 | Grondin, David |

1

Form PCT/ISA/210 (second sheet) (April 2005)

# INTERNATIONAL SEARCH REPORT

International application No
PCT/US2011/046716

C(Continuation). DOCUMENTS CONSIDERED TO BE RELEVANT

| Category* | Citation of document, with indication, where appropriate, of the relevant passages | Relevant to claim No. |
|---|---|---|
| X | FR 2 722 169 A1 (ESPINOSA BEATRICE [FR])<br>12 January 1996 (1996-01-12)<br><br>page 2, line 38 - page 3, line 20; figures 1-8<br>----- | 1,2,4,<br>7-14,<br>25-29,<br>53-56 |
| X | US 5 307 986 A (SCHUSTER RICHARD L [US])<br>3 May 1994 (1994-05-03)<br><br>column 2, line 49 - column 4, line 55; figures 1-9<br>----- | 1,2,4,5,<br>7-11,13,<br>25-27,<br>29,53-56 |

1

# INTERNATIONAL SEARCH REPORT

International application No.
PCT/US2011/046716

**Box No. II Observations where certain claims were found unsearchable (Continuation of item 2 of first sheet)**

This international search report has not been established in respect of certain claims under Article 17(2)(a) for the following reasons:

1. ☐ Claims Nos.:
because they relate to subject matter not required to be searched by this Authority, namely:

2. ☐ Claims Nos.:
because they relate to parts of the international application that do not comply with the prescribed requirements to such an extent that no meaningful international search can be carried out, specifically:

3. ☐ Claims Nos.:
because they are dependent claims and are not drafted in accordance with the second and third sentences of Rule 6.4(a).

**Box No. III Observations where unity of invention is lacking (Continuation of item 3 of first sheet)**

This International Searching Authority found multiple inventions in this international application, as follows:

see additional sheet

1. ☐ As all required additional search fees were timely paid by the applicant, this international search report covers all searchable claims.

2. ☐ As all searchable claims could be searched without effort justifying an additional fees, this Authority did not invite payment of additional fees.

3. ☐ As only some of the required additional search fees were timely paid by the applicant, this international search report covers only those claims for which fees were paid, specifically claims Nos.:

4. ☒ No required additional search fees were timely paid by the applicant. Consequently, this international search report is restricted to the invention first mentioned in the claims; it is covered by claims Nos.:

1-14, 25-29, 53-56

**Remark on Protest**

☐ The additional search fees were accompanied by the applicant's protest and, where applicable, the payment of a protest fee.

☐ The additional search fees were accompanied by the applicant's protest but the applicable protest fee was not paid within the time limit specified in the invitation.

☐ No protest accompanied the payment of additional search fees.

**FURTHER INFORMATION CONTINUED FROM PCT/ISA/** 210

This International Searching Authority found multiple (groups of) inventions in this international application, as follows:

1. claims: 1-14, 25-29, 53-56

A carton for containing one or more articles which carton comprises a base part having a base panel and a plurality of side wall panels wherein a first side wall panel is coupled to a second side wall panel by a first and a second web panel and wherein said first and second web panels are hinged to one another by a first fold line, the first web panel is hinged to said first side wall panel by a second fold line and the second web panel is hinged to the second side wall panel by a third fold line and wherein the first web panel is secured to the second web panel at a position distal from said second and third fold lines so as to allow the first and second sidewall panels to be moved from a closed position in which the first and second web panels abut one another to an open position in which the first and second web panels are fanned apart.

---

2. claims: 15, 30-32(completely); 1(partially)

A carton for containing one or more articles which carton comprises a base panel and a plurality of side wall panels wherein at least one side wall panel comprises a pocket comprising a first panel hinged to a second panel which is hinged to a third panel, wherein said first and third panels are each folded into overlapping relationship with the second panel, end most portions of the first and third panels are secured to said at least one side wall panel, portions of the first and third panels adjacent the second panel being free to be displaced away from said at least one wall such that the one or more articles are receivable within the pocket.

---

3. claims: 16-24(completely); 1(partially)

A carton for receiving one or more articles, the carton comprising a base panel, a plurality of side walls panels and an insert for spacing apart one or more articles; insert tool; and carton comprising a base panel, a plurality of side walls panels and a first base insert disposed on the base panel, the first base insert being sized and arranged for encouraging one or more articles when present in the carton to lean over from an upright position to be inclined with respect to the base panel.

---

4. claims: 33-52

A carton for receiving one or more articles, the carton comprising a base panel, a plurality of side walls panels

and a first base insert disposed on the base panel, the first base insert being sized and arranged for encouraging one or more articles when present in the carton to lean over from an upright position to be inclined with respect to the base panel.

---

# INTERNATIONAL SEARCH REPORT

Information on patent family members

International application No
PCT/US2011/046716

| Patent document cited in search report | Publication date | Patent family member(s) | Publication date |
|---|---|---|---|
| US 1020878 A | 19-03-1912 | NONE | |
| US 3119494 A | 28-01-1964 | CH 408770 A | 28-02-1966 |
| | | DK 101963 C | 14-06-1965 |
| | | GB 943614 A | 04-12-1963 |
| | | US 3119494 A | 28-01-1964 |
| FR 2722169 A1 | 12-01-1996 | NONE | |
| US 5307986 A | 03-05-1994 | AU 6395894 A | 26-09-1994 |
| | | US 5307986 A | 03-05-1994 |
| | | WO 9420373 A1 | 15-09-1994 |
| | | ZA 9401642 A | 12-10-1994 |