United States Patent [19]

King

[11] **3,820,611**

[45] **June 28, 1974**

[54] **WELL DRILLING METHOD AND APPARATUS**

[75] Inventor: **Graham E. King,** Dallas, Tex.

[73] Assignee: **Atlantic Richfield Company,** Los Angeles, Calif.

[22] Filed: **May 31, 1973**

[21] Appl. No.: **365,531**

Related U.S. Application Data

[63] Continuation-in-part of Ser. No. 93,062, Nov. 27, 1970, abandoned.

[52] **U.S. Cl.** ..... **175/57,** 175/92, 175/325, 308/4 A

[51] **Int. Cl.** **E21b 7/00,** E21b 17/10

[58] **Field of Search** ..... 175/57, 92, 306, 320, 321, 175/323, 325, 107; 308/4 A

[56] **References Cited**

UNITED STATES PATENTS

2,687,282	8/1954	Sanders	175/320 X
2,715,552	8/1955	Lane	308/4 A
2,758,891	8/1956	Kammerer	308/4 A
3,036,646	5/1962	Eckel et al.	175/107
3,088,532	5/1963	Kellner	175/321 X
3,343,615	9/1967	Terry	308/4 A X
3,599,736	8/1971	Thompson	175/329
3,680,647	8/1972	Dixon et al.	308/4 A X

FOREIGN PATENTS OR APPLICATIONS

1,195,283	5/1959	France	175/107
1,297,304	5/1962	France	175/325

Primary Examiner—David H. Brown
Attorney, Agent, or Firm—Roderick W. MacDonald

[57] **ABSTRACT**

A method and apparatus for preventing drilling bit vibration during rotation, thereby providing a straighter wellbore.

38 Claims, 9 Drawing Figures

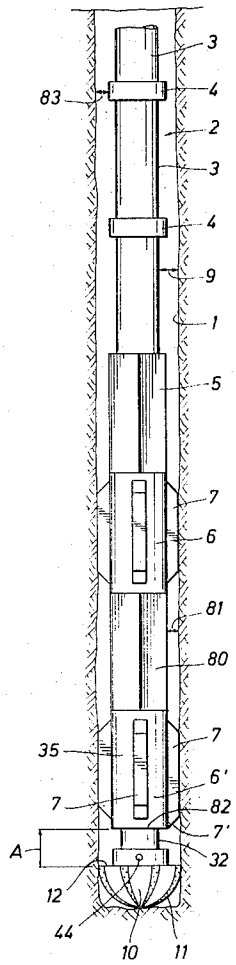

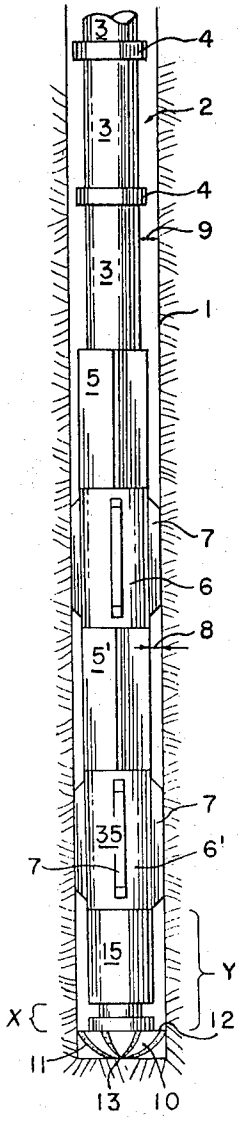

FIG. 1
PRIOR ART

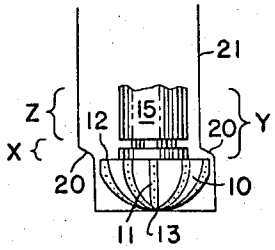

PRIOR ART
FIG. 2

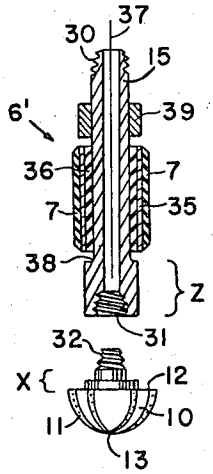

FIG. 3
PRIOR ART

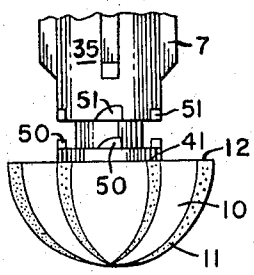

FIG. 5

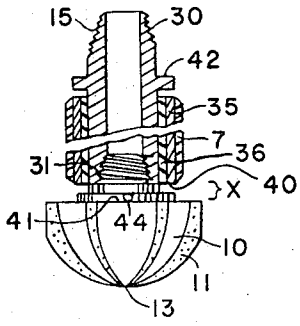

FIG. 4

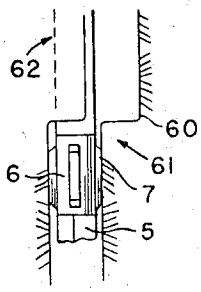

FIG. 6

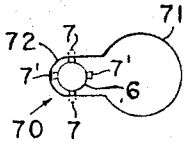

FIG. 7

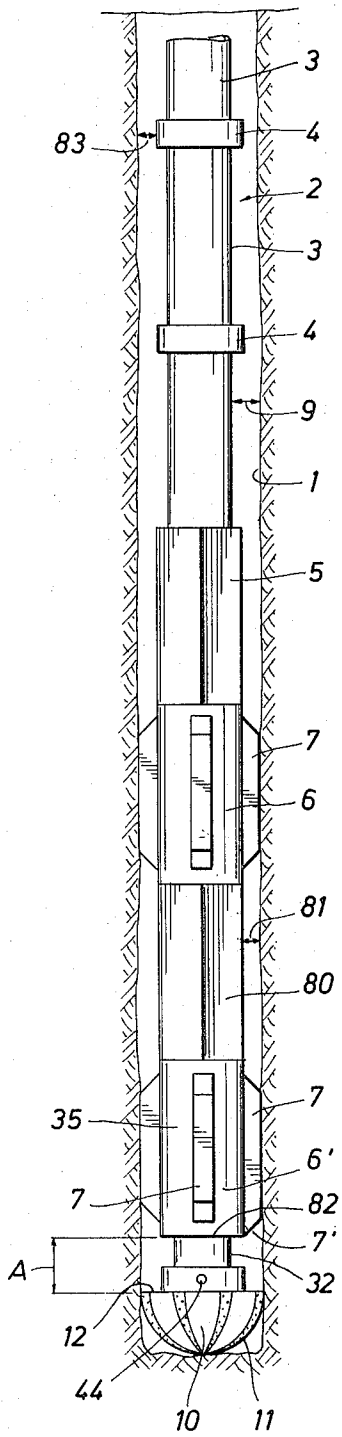

FIG. 8

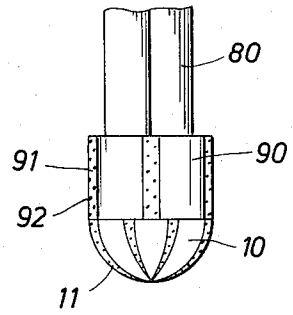

FIG. 9

WELL DRILLING METHOD AND APPARATUS

CROSS REFERENCES TO RELATED APPLICATIONS

This is a continuation-in-part of U.S. Pat. application Ser. No. 93,062, filed Nov. 27, 1970, now abandoned, the disclosure of which is incorporated herein by reference.

BACKGROUND OF THE INVENTION

Heretofore in drilling wellbores drill strings, i.e., the combination of the drill pipe string and the drill collar string, have been made up of a plurality of individual sections of drill pipe and drill collars. Adjacent ends of the drill pipe or drill collar sections were joined together by a device normally referred to as a tool joint. A tool joint can be either a separate coupling means into which is threaded, for example, both adjacent ends of the two sections of drill pipe, or a device where one adjacent end of the drill pipe has an internally threaded box member into which threads the other adjacent end or pin end of the drill pipe, and the like. Tool joints normally are of larger diameter than the pipe to which they are attached. In any event, tool joints are the device by which two adjacent sections of drill pipe or drill collars are joined one to another in a drill string. Therefore, a drill string normally has a substantial number of tool joints at spaced apart points along the length thereof. At the bottom of the drill string is the drill bit and between the bit and the drill pipe string is the drill collar string composed of at least one drill collar.

The outside diameter of the bit is the largest cross-sectionally dimensioned member of the drill string because it determines the diameter of the wellbore through which all of the rest of the members of the drill string must pass.

Drill collars are provided to impose weight on the bit and improve its drilling rate. These collars are therefore large heavy members which are full hole, i.e., closely approach the cross-sectional dimensions of the bit and well-bore. If the drill collar is a square or spirally grooved device its largest cross-sectional dimension will be substantially that of the drill bit and wellbore (borehole) because with these configurations there are passageways between the wellbore wall and the drill collar which allow movement of drilling fluid thereby. If the drill collar is round it will normally be of an outer cross-sectional diameter slightly less than that of the drill bit or wellbore to allow an open annulus for the free passage of drilling fluid thereby. In any event, the drill collars are large diameter members which closely approach, if they are not substantially the same as, the outside diameter of the bit.

The drill pipe tool joints. on the other hand, being only devices for connecting adjacent sections of pipe, need not be as large as the drill collars or bit and therefore are of substantially smaller diameter than the bit or collars.

In slim hole drilling very small diameter wellbores, i.e., no larger than about six inches in diameter, are drilled using extremely high, at least about 500 rpm, preferably from about 600 to about 2,000 rpm, rotation rates for the drill string. Because of the extremely high rotation rates in the very small diameter wellbore, the drill string strikes the side of the wellbore more often during drilling than in conventional rotary drilling. At least two factors that contribute to the greater frequency of contact between the drill string and the side of the wellbore are the high rate of rotation of the drill string causing lateral vibration of the drill string and the high rate of rotation of the drill string causing more turns of the drill string per foot of drilling depth, e.g., 10 to 20 times the rate of rotation as compared to conventional rotary drilling with only about three times as fast a drilling rate.

Therefore, in slim hole drilling there is an exceedingly greater propensity to the formation of keyseats. Keyseats are formed by the drill string and drill string tool joints bearing against the side of the wellbore and wearing a groove or side hole into the side of the wellbore.

It has been discovered that in slim hole drilling the problems associated with the formation of keyseats, e.g., hang-up of the drill collars in the keyseats, can be avoided, even though the keyseats may be formed to some extent, by employing tool joints which have an outside diameter at least as large as the largest cross-sectional dimension of the drill collar employed and no larger than the outside diameter of the drill bit. This invention is fully and completely disclosed in U.S. Pat. No. 3,675,728, the disclosure of which is incorporated herein by reference.

In the situation where the tool joints have a greater diameter than the largest cross-sectional section of the drill collars, the drill collars are not "full hole," i.e., do not extend completely across the wellbore. For example, in a 4 inch diameter wellbore, the largest cross-sectional dimension of a drill collar could be 3¼ inches which leaves considerable room for harmful lateral vibration of the drill collars as well as for buckling of the drill collars with consequent danger of drilling a hole deviating substantially from vertical.

Therefore, it is desirable to have a plurality of stabilizers along the drill collar string to minimize vibration thereof during drilling and to prevent or minimize drill collar buckling.

Heretofore, in the placement of stabilizers in a drill collar string with or without downhole motors, the stabilizer nearest the drill bit was spaced from the drill bit at least about eight inches since one tool joint (which is always at least six inches long) was always used between the bit and stabilizer. Sometimes a sub (transition pipe) with two box ends was used to receive the stabilizer pin end and the bit pin which made this distance much greater than 6 inches.

SUMMARY OF THE INVENTION

It has now been discovered that in the situation wherein the drill collars and/or downhole motors are substantially smaller in diameter than the hole diameter, e.g., where the tool joints in the drill pipe string have an outside diameter larger than the largest cross-sectional dimension of the drill collars, downhole motors, and their tool joints, and even though stabilizers are employed in the drill string, harmful lateral vibration of the bit results which can lead to doglegs or other curvature or offsets of the wellbore and to premature breakage of the diamonds in the bit.

It has further been discovered that these harmful vibrations of the bit can be avoided if the stabilizer nearest the bit is closer than a tool joint distance to, preferably no greater than about four inches away from, the gauge elements of the bit.

Accordingly, this invention relates to a drilling method in the above context wherein there is employed a stabilizer adjacent the bit so that the end of the stabilizer nearest the bit is less than a tool joint length from the nearest ends of the gauge elements of the bit.

This invention also relates to a drill string which contains a stabilizer near the bit as above described.

This invention also relates to the stabilizer assembly itself as hereinafter described in detail.

Accordingly, it is an object of this invention to provide a new and improved method and apparatus for avoiding harmful lateral vibration of a drill bit when the outside diameter of the drill collars and/or downhole motors is substantially smaller than the hole diameter and when stabilizers are employed in the drill collar string. It is another object to provide a new and improved method and apparatus for maintaining the wellbore straight during high speed drilling such as that employed in slim hole drilling. It is another object to provide new and improved apparatus for avoiding wellbore deviation during any drilling, particularly high speed slim hole drilling. It is another object to provide new and improved apparatus for removing a drill string containing stabilizers from a deviated wellbore.

Other aspects, objects, and advantages of this invention will be apparent to those skilled in the art from this disclosure and the appended claims.

DETAILED DESCRIPTION OF THE INVENTION

FIG. **1** shows a drill string in a wellbore.

FIG. **2** shows the type of deviation that can result in a wellbore by reason of harmful lateral vibrations of the bit.

FIG. **3** shows a conventional configuration for a stabilizer as used in the apparatus of FIGS. **1** and **2**.

FIG. **4** shows one configuration of a stabilizer embodying this invention.

FIG. **5** shows another embodiment of a stabilizer according to this invention.

FIG. **6** shows how a stabilizer can become hung in a deviated wellbore.

FIG. **7** shows a cross-sectional view of a stabilizer hung in a keyseat.

FIG. **8** shows a drill string according to this invention which employs a downhole motor in place of a drill collar near the bit.

FIG. **9** shows another embodiment within this invention wherein the stabilizer essentially contacts the bit.

More specifically, FIG. **1** shows a wellbore **1** in the earth, the wellbore containing a drill string **2** which contains a drill pipe string containing a plurality of sections of drill pipe **3** joined by conventional couplings or tool joints **4**. Tool joints **4** can be separate couplings into which two pieces of pipe **3** are threaded or can be the integral pin and box type coupling. The lower end of drill string **2** contains a drill collar string containing a plurality of drill collars **5** and **5'** spaced apart from one another by stabilizers **6** and **6'**. Each stabilizer has a plurality of fins or ribs **7** which extend into contact with the wall of wellbore **1** to prevent vibration and buckling of the drill string because of the clearance **8** between the wellbore wall and the drill collars, e.g., greater than ¼ inch, and the clearance **9** between the wellbore wall and drill pipe. Both of these clearances can be caused by tool joints **4** having an outside diameter larger than the largest cross-sectional dimension of drill collars **5** and **5'**, but no larger than the outside diameter of conventional diamond bit **10** with a consequent preference to use drill collars of a diameter substantially smaller than the hole diameter.

Diamond bit **10** has a plurality of guage elements **11** which extend from the upper edge **12** to the bottom **13** of the bit. These gauge elements carry the diamonds which cut the earth. These gauge elements also determine the cross-sectional dimension of the wellbore, the ends of bit gauge elements **11** which terminate at line **12** are the ends which are closest to stabilizer **6'**. Line **12** is spaced from elements **7** of stabilizer **6'** by a distance Y which is normally at least about 8 inches in length and is composed of the bit shank length X and a tool joint length Z of mandrel **15**.

Mandrel **15** threads into upper drill collar **5'**, extends the full length of stabilizer **6'**, is exposed for tool joint length Z, and receives interiorly thereof the threaded portion of bit **10**. Mandrel **15** is normally exposed Z distance to permit engaging of tools to conventionally disassemble stabilizer **6'** from bit **10** and from drill collar **5'**. This is why Z is called a tool joint length. Often distance Y is much greater than X plus Z because a sub (length of pipe) is inserted as a transition piece between bit **10** and mandrel **15**.

Thus, there is a substantial distance Y which has been found to allow harmful vibration of bit **10** when rotating drill string **2** at conventional speeds of less than 500 rpm and particularly at high slim hole speeds, i.e., at least about 500 rpm in a wellbore having a diameter no greater than about 6 inches.

The vibration of bit **10**, besides prematurely breaking the diamonds from gauge elements **11** and substantially shortening the drilling life of bit **10**, can cause an offset in well-bore **21** as represented by **20** in FIG. **2**. This causes a deviated wellbore.

FIG. **3** shows a conventional construction for stabilizer **6'** of FIG. **1** wherein mandrel **15** has a threaded drill string end **30** for threadably engaging a tool joint, drill collar, and the like of drill string **2** of FIG. **1** and a threaded bit end **31** for threadably engaging bit **10**. Pin end **32** of bit **10** threads into box end **31** of mandrel **15** as shown in FIGS. **1** and **2** thereby leaving bit shank length X exposed.

Spaced apart wellbore wall contacting elements **7** are supported upon a right cylindrical member **35** which in turn rests upon a right cylindrical bearing member **36**. Bearing member **36** is fixed to a mandrel **15** whereas cylindrical member **35** is slideable over bearing **36** in a direction parallel to the longitudinal axis **37** of mandrel **15**. Shoulder **38** prevents member **35** from sliding down to bit **10**.

In the assembly of stabilizer **6'** member **35**, carrying elements **7**, is slid over end **30** into contact with bearing **36**. Thereafter, sleeve **39** is fixed to mandrel **15** thereby providing a stop means to prevent sleeve **35** from sliding over end **30** when in use in the wellbore. Stop means **39** is conventionally a metallic sleeve which is heated, forced over mandrel **15**, and then cooled, the contracting of stop means **39** upon cooling fixing that member to mandrel **15** in a rigid manner.

In accordance with this invention, tool joint length Z of mandrel **15** is eliminated and bit shank length X is kept at a length of less than tool joint length Z, preferably no more than about 4 inches, so that the end **40** of the stabilizer of FIG. **4** is substantially less than one tool

joint length from the nearest ends **41** of the bit gauge elements **11.**

The stabilizer of FIG. **4** is a stabilizer according to this invention and the combination of the stabilizer of FIG. **4** with the bit **10** is also a combination in accordance with this invention.

Besides the advantages discussed hereinabove, the stabilizer of FIG. **4** has additional advantages in that removable stop means **39** is eliminated along with shoulder **38.** In FIG. **4,** a non-removable stop means **42** is employed near drill string end **30** starting up-hole with drill collar **5'** of FIG. **1** and mandrel **15** carries no stop means near bit end **31,** the bit itself serving as the stop means or shoulder at that end of the stabilizer. Thus, when bit **10** is removed from mandrel **15,** slideable member **35** can simply be slid in a direction parallel to the longitudinal axis of mandrel **15** over bit end **31** for easy removal and thereby eliminating the necessity of removing a removable stop means such as element **39** of FIG. **3.**

Tool joint length Z of mandrel **15** of FIG. **3** is normally provided to give space for the gripping surfaces of tools such as tongs which are normally used in making and breaking threaded connections, i.e., in making up and breaking down the threaded connection between mandrel **15** and bit **10.** Heretofore, this is the way stabilizers were built and the reason for the consistent use of an exposed tool joint Z.

According to this invention tool joint Z and its accompanying shoulder **38** are completely eliminated without eliminating the function thereof. Working space for tongs or other tools is provided for in the invention stabilizer of FIG. **4** between non-removable stop means **42** and drill string end **30.** A depression **44** and a matching depression (not shown) spaced 180° from **44** are provided to receive opposing projections from a conventional spanner wrench so that bit **10** can be moved relative to mandrel **15** for engaging or disengaging the threaded portions thereof.

Member **35** is normally freely rotatable about the longitudinal axis of mandrel **15** so that whenever an element **7** contacts the side of the wellbore the contacting element **7** stops while mandrel **15** and bearing **36** continue rotating as does the entire drill string continue to rotate. Thus, elements **7** and member **35** are freely rotatable as well as freely slideable with respect to mandrel **15** and drill string **2.**

Instead of spaced apart elements **7,** the portion of the stabilizer which contacts the wellbore can be a solid cylindrical member which contacts the wellbore around 360°. Slots, grooves, channels, and the like can be provided on the outer surface and/or inner surface and/or interior of the body of this cylindrical member to allow drilling fluid to flow thereby. All these and other obvious equivalents are alternatives to elements **7** which are within the scope of this invention.

FIG. **5** shows an embodiment of the apparatus of this invention which is useful when it is desired to control the rotation of elements **7** by the rotation of the drill string **2** when the drill string, and therefore the stabilizer, is being drawn upwardly out of the wellbore.

More specifically, FIG. **5** shows bit **10** having upwardly extending projections **50** rigidly fixed thereto. As shown in FIG. **4,** sleeve member **35** extends to the bottom of end **31** of mandrel **15.** Sleeve **35** carries depressions, cutouts, and the like **51** which match projections **50** in a mating manner so that when member **35** slides downwardly projections **50** extend into depressions **51.** These opposing projections and depressions **50** and **51** comprise a clutch means which when engaged renders member **35** and elements **7** non-freely rotatable and converts the stabilizer into one which rotates only when drill string **2** rotates and only in the direction of rotation of that drill string.

The clutch means of FIG. **5** is disengaged when bit **10** and drill string **2** are being lowered into the hole for drilling downwardly, the frictional forces between the walls of the wellbore and element **7** causing member **35** to slide parallel to the longitudinal axis of drill string **2** upwardly thereby keeping projections and depressions **50** and **51** spaced apart as shown in FIG. **5.** When drill string **2** and bit **10** are withdrawn upwardly in or from the wellbore and the frictional forces acting on elements **7** are reversed in their direction of action, member **35** is forced downwardly until it abuts bit **10** thereby engaging projections and depressions **50** and **51.**

Freely rotatable stabilizers of this invention can be converted to a stabilizer which is controlled in its rotation by the drill string. This is important when it is desired to control the orientation of the elements **7** in the wellbore. For example, when an offset such as that shown being started in FIG. **2** is encountered in a wellbore it can be difficult to remove the stabilizers from the wellbore.

FIG. **6** shows a wellbore **60** with an offset **61** therein which is exaggerated for sake of clarity. In making offset **61** in wellbore **60,** a side hole **62** can be formed. This side hole can be of smaller diameter than the normal diameter formed by the bit **10** such as when it is formed by a drill pipe **3** and drill pipe tool joints **4.** Therefore, elements **7** on stabilizer **6** can become hung up by abutting against ground around the periphery of side hole **62.**

This is shown in FIG. **7** using a well-known keyseat configuration **70** wherein the main wellbore **71** is formed but in which a keyseat side hole **72** has been formed which is of smaller diameter such as the diameter of the drill pipe or tool joints. Normally, below side hole **72** is a larger, normal diameter hole such as **71** and when passing from this lower hole upwardly stabilizer **6** will have elements **7** caught under the ledge of ground at which keyseat **72** starts.

Thus, in the situation of both FIGS. **6** and **7** stabilizer **6** can become hung up in the wellbore. Elements **7** can be made of a shearable or abradable material such as rubber so that when the stabilizer does become hung up sufficient force can be applied to simply shear off the hung up elements **7** and free the stuck drill string. However, shearable elements normally do not wear as well as non-shearable elements such as those made out of steel.

According to this invention adequate wear can be achieved and some shearable elements employed if at least two of the elements spaced 180° from one another are made of non-shearable material such as steel or other strong metal and at least two other 180° spaced apart elements are formed of a shearable material such as rubber. For example, in the situation of FIG. **7,** elements **7—7** can be made of steel while elements **7'—7'** can be made of rubber.

By employing the clutch means of FIG. **5** or other suitable equivalent clutch means, when stabilizer **6** becomes hung up in the wellbore member **35** slides down-

wardly engaging projections **50** with depressions **51**, and thereby engaging the clutch. Elements **7** and **7'** of stabilizer **6** in FIG. **7** will not rotate with the drill string. If the drill string is rotated 90° clockwise or counterclockwise, shearable rubber elements **7'** will be placed under the overhang of keyseat side hole **72** while non-shearable steel elements **7** will be rotated into the clear in the position in which elements **7'** are shown in FIG. **7**. Then, with additional upward pulling force on drill string **2**, shearable elements **7'** will be sheared off and the drill string freed. Similar manipulative steps can be employed in the situation of FIG. **6** to free drill string **2**.

As shown in FIG. **4**, elements **7** can extend the full length of member **35** or, as shown in FIG. **5**, elements **7** can terminate short of the end of member **35** as desired. More than four elements **7** can be employed if desired and these elements can be composed of any suitable material be it metal if non-shearable elements are desired or rubber, plastic (e.g., polyethylene, polypropylene, nylon, polytetrafluoroethylene), and the like, shearable elements are desired. Although diamond bits are preferably employed, other suitable types of bits can be used if desired. Similar reasoning applies to FIGS. **8** and **9**.

FIG. **8** shows an embodiment within this invention wherein at least one downhole motor is employed near the bit in lieu of or in combination with drill collars. FIG. **8** shows a drill string within wellbore **1** composed of at least two sections of drill pipe **3** joined by tool joints **4**. The drill pipes have clearance **9** between them and wellbore wall. The lowest drill pipe is connected to a square drill collar **5** which in turn is connected to a stabilizer **6** that carries wellbore contacting elements **7**. Stabilizer **6** is in turn at its lower end connected to at least one downhole motor **80** which can be square as shown in FIG. **8** or round or of any desired outer configuration. Motor **80** has a clearance **81** between the outside of the motor and the wellbore wall.

Motor **80** is connected to stabilizer **6'** which is described in detail hereinabove. One or more downhole motors can be connected in line with one another between stabilizers **6** and **6'** and/or one or more downhole motors can be employed in lieu of or in combination with drill collar **5** between the lowest drill pipe **3** and stabilizer **6**. Stabilizer **6'** is connected to bit **10** with its bit gauge elements **11** which terminate at their upper end at **12**. Bit **10** has a depression **44** for accommodating a spanner wrench and a pin end **32** which threads into stabilizer **6'**, e.g., as shown in detail in FIG. **3**.

In accordance with this invention, the lower end **82** of stabilizer **6'** is spaced adjacent to bit **10** so that the ends **7'** of the wellbore contacting elements **7** which are nearest bit **10** are spaced from the nearest bit gauge elements, i.e., upper end **12**, so that the distance A is substantially less than one tool joint diameter, preferably no more than 4 inches.

As described for other embodiments of this invention, the wellbore diameter can be no greater than about 6 inches and one or both of stabilizers **6** and **6'** can be freely rotatable about the longitudinal axis of the drill string. Also, a plurality of such stabilizers can be employed at spaced apart points along the length of the downhole motor string if desired, the stabilizers having at least one external portion, i.e., wellbore contacting elements **7**, composed of an abradable material which has an outside diameter at least as large as the outside diameter of the tool joints but not greater than the diameter of the bit. All nonabradable parts of the stabilizers can have an outside diameter less than the outside diameter of the tool joints. For example, clearance **81** for the stabilizers can be about the same in magnitude as clearance **9** for the drill pipe, clearance **9** being greater than the clearance **83** between the wellbore wall and the outside of tool joint **4**. The wellbore contacting elements can be spaced apart about 180° as described hereinabove and the stabilizer **6'** and bit **10** can have clutch means, for example, a clutch as described in FIG. **5** hereinabove.

As with the other embodiments of this invention, the space between the ends **7'** of the wellbore contacting elements of the stabilizer and the upper end **12** of the bit gauge elements **11** can be as small as possible, for example, a fraction of an inch or even touching. This is so because the closer the two elements are the better from the point of view of avoiding keyseats and the like.

Such an embodiment is shown in FIG. **9** wherein the wellbore contacting elements **91** of stabilizer **90** essentially contact bit gauge elements **11**.

Of course, the wellbore contacting elements **7** and **91** besides being abradable in the sense that rubber, plastic, and the like are abradable, can be essentially non-abradable if metal is the material used to make up the wellbore contacting elements. For example, the wellbore contacting elements can be made out of the same material that bit **10** or bit gauge elements **11** are made from. In addition, the wellbore contacting elements can be made even more non-abradable by being made to carry one or more cutting means. For example, wellbore contacting elements **91** of FIG. **9** can carry diamonds **92** therein in the same manner as bit gauge elements **11** carry diamonds. Of course, cutting means other than diamonds can be carried by the wellbore contacting elements if desired.

EXAMPLE

Two wellbores were drilled each to a depth of about 4,200 feet and each having a diameter of about 4 inches using a diamond bit. Wellbore **1** was drilled with the apparatus substantially as shown in FIG. **1** wherein length Z was 8 inches and length X was 3 inches. Wellbore **2** was drilled with substantially the same apparatus except that length Z was eliminated by use of the stabilizer-bit combination substantially as shown in FIG. **4**. Each wellbore was drilled to total depth using the same type water-bentonite drilling mud. After drilling, the drilling string was removed from each wellbore and deviation surveys run for a wellbore straightness determination. Wellbore **1** exhibited numerous offsets such as that shown in FIGS. **2** and **6** while wellbore **2** lacked these offsets and was substantially straighter.

Reasonable variations and modifications are possible within the scope of this disclosure without departing from the spirit and scope of this invention.

The embodiments of the invention in which an exclusive property or privilege is claimed are defined as follows.

1. A slim hole drilling method comprising rotary drilling a wellbore by rotating the drill string, its tool joints, and drill bit, employing at least one drill collar in said drill string adjacent said bit, said at least one drill collar being substantially smaller in its largest cross-sectional dimension than the outside diameter of said bit, and

employing a stabilizer which has at least one wellbore contacting element thereon in said drill string adjacent said bit so that the end of said wellbore contacting element which is nearest said bit is spaced from the nearest bit gauge elements a length of substantially less than one tool joint diameter.

2. A method according to claim **1** wherein said wellbore diameter is no greater than about 6 inches and said rotation rate is at least about 500 rpm.

3. A method according to claim **1** wherein there is employed a plurality of rotatable stabilizers at spaced apart points along the length of the drill collar string, the stabilizers having at least one external portion which is composed of an abradable material and which has an outside diameter at least as large as the outside diameter of said tool joints but no greater than the diameter of said bit, all nonabradable parts of said stabilizers being of an outside diameter less than the outside diameter of said tool joints.

4. A method according to claim **1** wherein said at least one stabilizer as freely rotatable about the longitudinal axis of said drill string.

5. A method according to claim **1** wherein said stabilizer is no more than about four inches from the nearest bit gauge elements.

6. A drill string according to claim **1** wherein at least part of said wellbore contacting elements are essentially nonabradable and rotate with said bit.

7. A drill string according to claim **6** wherein said essentially nonabradable wellbore contacting elements carry cutting means.

8. A drill string according to claim **7** wherein said essentially nonabradable wellbore contacting elements carry cutting means.

9. In a slim hole drill string for drilling wellbores comprising at least two sections of drill pipe joined by at least one tool joint, a bit at one end of said drill string, at least one drill collar on the bit end of said drill string, said at least one drill collar being substantially smaller in its largest cross-sectional dimension than the outside diameter of said bit, and a stabilizer means which has at least one wellbore contacting element thereon, said stabilizer being between said bit and said drill collar so that the end of said wellbore contacting element which is nearest said bit is spaced from the nearest bit gauge elements a length of less than one tool joint diameter.

10. A drill string according to claim **9** wherein said stabilizer is no more than about four inches from the nearest bit gauge elements.

11. A drill string according to claim **9** wherein said bit has a shank length less than one tool joint length and said shank has depressions for accommodating a spanner wrench.

12. A drill string according to claim **9** wherein said wellbore contacting elements essentially contact said bit gauge elements.

13. A drill string according to claim **9** wherein at least part of said wellbore contacting elements are essentially nonabradable and said stabilizer is carried by said drill string so as to rotate with said bit.

14. The drill string according to claim **9** wherein said at least one stabilizer has a plurality of elements which contact the wellbore wall, and said elements are freely rotatable about the longitudinal axis of said drill string.

15. The drill string according to claim **14** wherein at least two of said plurality of elements are spaced about 180° apart and can be sheared from said stabilizer, at least two other of said elements are spaced about 180° apart and cannot be sheared from said stabilizer, and clutch means which engages when said drill string is raised from said wellbore to make said normally freely rotatable elements rotatable only with said drill string.

16. A drill string according to claim **15** wherein said clutch means includes at least one projection carried by said drill string, said stabilizer carrying matching depressions for receiving said at least one projection, at least the portion of said stabilizer which carries said depressions being slideable along the longitudinal axis of said drill string so that said portion carrying said depressions can slide down and engage said projections when said drill string is raised upwardly.

17. A drill string stabilizer comprising a hollow mandrel capable of engagement with a drill string at one end and a bit at the other end, a non-removable stop means near the drill string end of said mandrel, a wellbore contacting means carried about said mandrel between said stop means and the bit end of said mandrel, said contacting means being freely rotatable about the longitudinal axis of said mandrel, said contacting means being removable from said mandrel by sliding parallel to the longitudinal axis of said mandrel away from said stop means and over said bit end of said mandrel, said mandrel being sized so that a bit attached to the bit end of said mandrel has less than one tool joint length between the stabilizer and the bit gauge elements.

18. A drill string stabilizer according to claim **17** wherein a clutch means is carried with said freely rotatable elements for fixing said elements so that they only rotate with said mandrel.

19. A drill string stabilizer according to claim **18** wherein at least two of said elements are spaced about 180° apart and can be sheared from said stabilizer, and at least two other of said elements are spaced about 180° apart and cannot be sheared from said stabilizer.

20. A drill string stabilizer according to claim **17** wherein a bit threadably engages said bit end of said mandrel, said bit carrying at least one projection extending toward said elements, at least one depression carried with said elements and adapted to receive said at least one projection on said bit when said elements slide parallel to the longitudinal axis of said mandrel toward the bit end of said mandrel.

21. A drill string stabilizer according to claim **20** wherein said bit has a shank length less than one tool joint.

22. A slim hole drilling method comprising rotary drilling a wellbore using a drill string carrying tool joints and a drill bit, employing at least one downhole motor in said drill string near said bit, said at least one downhole motor being smaller in its largest cross-sectional dimension than the outside diameter of said bit, and employing a rotatable stabilizer which has at least one wellbore contacting element thereon in said drill string adjacent said bit so that the end of said wellbore contacting element which is nearest said bit is spaced from the nearest bit gauge elements a length of substantially less than one tool joint diameter said rotatable stabilizer being freely rotatable about the longi-

tudinal axis of said drill string and having at least one external portion which is composed of an abradable material and which has an outside diameter at least as large as the outside diameter of said tool joints but no greater than the diameter of said bit.

23. A method according to claim **22** wherein said well-bore diameter is no greater than about 6 inches.

24. A method according to claim **22** wherein there is employed a plurality of rotatable stabilizers at spaced apart points along the length of said drill string.

25. A method according to claim **22** wherein said stabilizer is no more than about four inches from the nearest bit gauge elements.

26. A method according to claim **22** wherein at least part of said wellbore contacting elements are essentially nonabradable and rotate with said bit.

27. A method according to claim **26** wherein said essentially nonabradable wellbore contacting elements carry cutting means.

28. In a slim hole drill string for drilling wellbores comprising at least two sections of drill pipe joined by at least one tool joint, a bit at one end of said drill string, at least one downhole motor on the bit end of said drill string, said at least one downhole motor being substantially smaller in its largest cross-sectional dimension than the outside diameter of said bit, and a rotatable stabilizer means which has at least one wellbore contacting element thereon, said stabilizer being between said bit and said downhole motor so that the end of said wellbore contacting element which is nearest said bit is spaced from the nearest bit gauge elements a length of less than one tool joint diameter said rotatable stabilizer means being freely rotatable about the longitudinal axis of said drill string and having at least one external portion which is composed of an abradable material and which has an outside diameter at least as large as the outside diameter of said tool joints but no greater than the diameter of said bit.

29. A drill string according to claim **28** wherein said stabilizer is no more than about four inches from the nearest bit gauge elements.

30. A drill string according to claim **28** wherein said bit has a shank length less than one tool joint length and said shank has depressions for accommodating a spanner wrench.

31. A drill string according to claim **28** wherein said wellbore contacting elements essentially contact said bit gauge elements.

32. A drill string according to claim **28** wherein at least part of said wellbore contacting elements are essentially nonabradable and said stabilizer is carried by said drill string so as to rotate with said bit.

33. A drill string according to claim **32** wherein said essentially nonabradable wellbore contacting elements carry cutting means.

34. The drill string according to claim **28** wherein a plurality of stabilizer means is employed at spaced apart points along the length of said drill string.

35. The drill string according to claim **34** wherein at least two of said elements are spaced about 180° apart and can be sheared from said stabilizer, at least two other of said elements are spaced about 180° apart and cannot be sheared from said stabilizer, and clutch means which engages when said drill string is raised from said wellbore to make said normally freely rotatable elements rotatable only with said drill string.

36. A drill string according to claim **35** wherein said clutch means includes at least one projection carried by said drill string, said stabilizer carrying matching depressions for receiving said at least one projection, at least the portion of said stabilizer which carries said depressions being slideable along the longitudinal axis of said drill string so that said portion carrying said depressions can slide down and engage said projections when said drill string is raised upwardly.

37. In a drill string containing a bit and at least one stabilizer means, the improvement comprising said bit being fixed directly to a stabilizer means so that there is no tool joint between said bit and said bit carrying stabilizer means, said bit carrying stabilizer means being held together at least in part by said bit so that removal of said bit permits immediate removal of at least part of the bit carrying stabilizer means itself.

38. A drill string according to claim **37** wherein said drill string contains at least one downhole motor near said bit carrying stabilizer.

* * * * *