March 24, 1931. J. H. COATES 1,797,717

WORKBENCH

Filed May 9, 1928 2 Sheets-Sheet 1

Fig. 1.

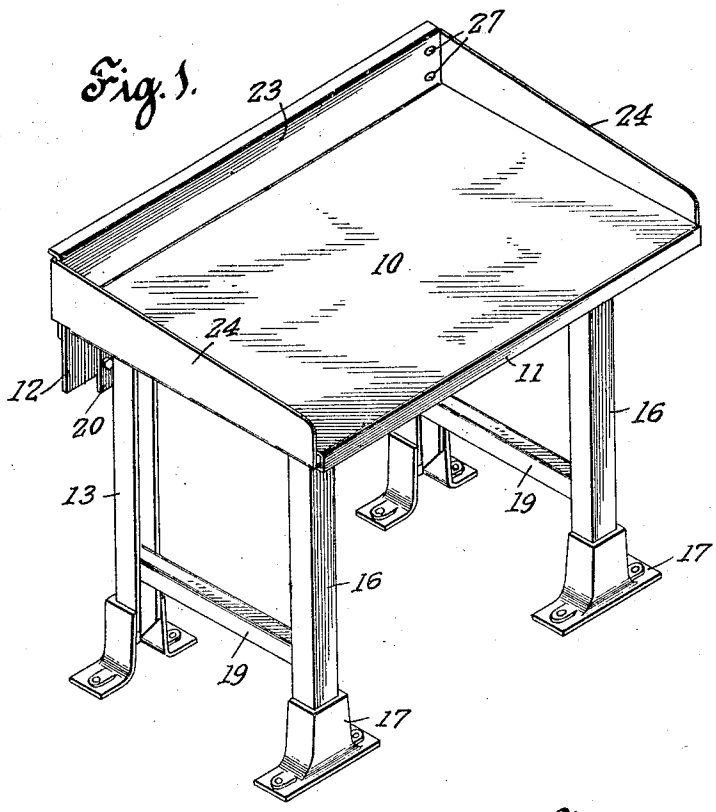

Fig. 2.

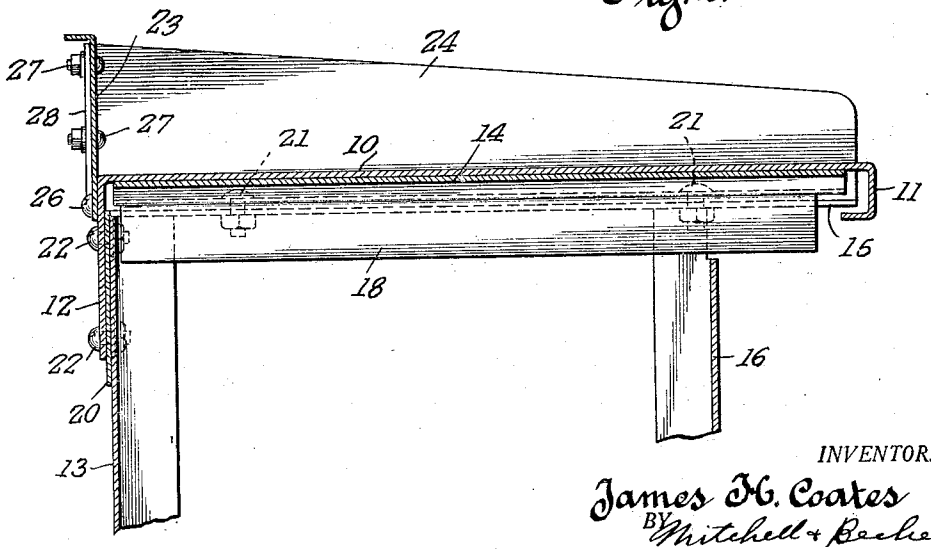

INVENTOR.

James H. Coates

BY Mitchell & Beckert

ATTORNEYS.

March 24, 1931. J. H. COATES 1,797,717

WORKBENCH

Filed May 9, 1928 2 Sheets-Sheet 2

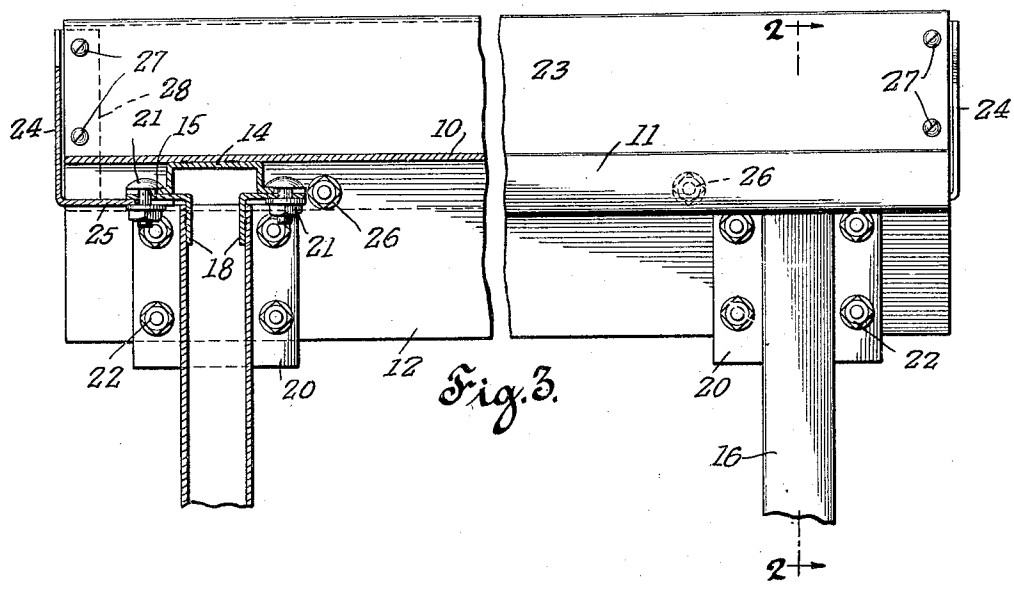

Fig. 3.

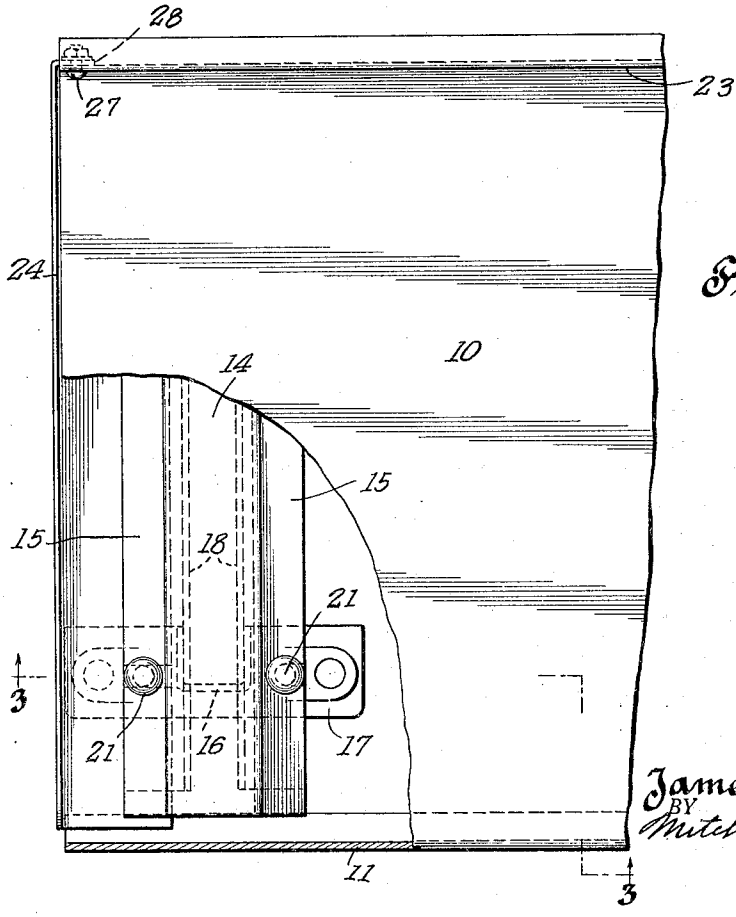

Fig. 4.

INVENTOR.
James H. Coates
BY
Mitchell & Bechert
ATTORNEYS.

Patented Mar. 24, 1931 1,797,717

UNITED STATES PATENT OFFICE

JAMES HERBERT COATES, OF NEW BRITAIN, CONNECTICUT, ASSIGNOR TO THE NEW BRITAIN MACHINE COMPANY, OF NEW BRITAIN, CONNECTICUT, A CORPORATION OF CONNECTICUT

WORKBENCH

Application filed May 9, 1928. Serial No. 276,254.

This invention relates to work-benches or tables.

An object of the invention is to provide a work-bench of all metal construction, the table or bench top being attached to the legs or supporting structure without bolt heads or other projections or holes extending through the table surface.

Another object of the invention is to provide the table top of a work-bench with a downwardly extending integral flange at its rear edge to which the rear legs may be attached to support and stiffen the work-bench against lateral swaying of the bench.

Another object of the invention is to provide a flanged or bent portion along the front edge of the table plate to reinforce and stiffen the same.

Another object of the invention is to provide inverted U-shaped members preferably directly welded to the underside of the table top or plate and provided with laterally and horizontally extending flanges throughout their length to which the legs may be bolted or otherwise secured.

Another object of the invention is to provide a strong, rigid, light and easily assembled metal work-bench built of standard rolled steel sections and plates.

A still further object of the invention is to provide a table plate adapted to be detachably attached to a supporting structure comprising legs joined together in pairs by horizontal spacing members at their upper ends, these horizontal spacing members being adapted to be bolted to members attached to the underside of the table plate.

With these and other objects in view my invention consists in the features of construction and operation set forth in the following specification and illustrated in the accompanying drawings.

In the accompanying drawings annexed hereto and forming a part of this specification I have shown my invention embodied in an individual table or work-bench of short length, but it will be understood that the invention can be otherwise embodied and that the drawings are not to be construed as defining or limiting the scope of the invention, the claims appended to this specification being relied upon for that purpose.

In the drawings—

Fig. 1 is an isometric view of a complete work-bench or table;

Fig. 2 is a transverse central sectional view taken on the line 2—2 of Fig. 3 and showing the table construction and its attachment to the leg structure;

Fig. 3 is a vertical sectional view taken upon the broken line 3—3 of Fig. 4; and

Fig. 4 is a fragmentary plan view of the bench or table top, the table portion being broken away to show its means of attachment to the leg structure.

In the above mentioned drawings I have shown but one embodiment of the invention which is now deemed preferable, but it is to be understood that changes and modifications may be made within the scope of the appended claims without departing from the spirit of the invention.

The invention in its preferred aspect includes a table or bench structure adapted for all metal construction and including a table portion, the leg structure being detachably attached to members secured to the underface of the table or bench structure.

Referring more in detail to the figures of the drawings I provide a table member 10 in the form of a plate of sheet metal such as steel with a flange or bent down portion 11 along its forward edge to reinforce this portion of the table plate. A bent down or flanged portion 12 along its opposite or rear edge is also provided to which the rear legs 13 are adapted to be attached as will be presently described. Secured to the underside of the table plate 10 preferably by being welded thereto are rearwardly extending inverted U-shaped members 14 provided with oppositely extending horizontal flanges 15. Preferably, these members 14 extend substantially the full depth of the table top 10 and the flanges 15 extend throughout the length of the members 14. The flanges 15 are appropriately slotted for attaching the upper flanged ends of the leg members thereto.

The members 14 are so formed that their flanges 15 are spaced from the lower surface

of the table plate an amount sufficient to accommodate the heads of bolts 21, and permit introduction of the bolts, these bolts having their shank portions extending through slots or recesses in the flanges 15.

The rear and front leg members 13 and 16 on each side of the bench are preferably formed of vertically extending channel members to which suitable pedestals 17 are secured at their lower ends as by welding or other means. The upper ends of these channel members 13 and 16 are provided with horizontal connecting angle members 18 on opposite sides preferably of suitable length to extend substantially from the forward to the rearward edge of the table top 10. A spacer bar 19 also in the form of a channel iron may be secured at an intermediate portion of the leg members 13 and 16 to rigidly retain these leg members in spaced relation. Also these spacers may serve as a support for a shelf (not shown) which may rest upon their upper surfaces.

Each leg structure may be readily attached or detached relative to members 14 of the table member and comprises a front and rear leg 13 and 16 connected at their upper ends by the horizontally extending angle members 18 and the intermediate connecting member 19. The rear leg 13 of each leg structure has a flat plate 20 secured, as by welding, adjacent its upper end and extending on opposite sides of the vertical channel member forming the leg member.

In order to attach the leg structures to the underside of the table plate 10, bolts 21 are provided passing through the recesses or slots in the flanges of the U-shaped members 14 and through suitable holes in the horizontal portions of the angle members 18 secured to the upper ends of the leg members 13 and 16. By this means it will be seen that the bolts 21 or other means, for attaching the table plate 10 to the leg structures do not pass through the table plate 10, the table plate 10 being entirely without projections or holes extending through it.

In order to brace the bench against lateral deflections or side swaying the plate 20 attached to the rear face of each rear leg member 13 is attached to the rear downward extending flange 12 of the table plate 10. Bolts 22 extending through these plates 20 extend through the rearward depending flange 12, so that the leg structures are held rigidly and vertically relative to the table plate.

Preferably and as indicated in the drawings, the table or bench is provided with raised back 23 and side portions 24. These, as shown, are attached to the bench in a manner to avoid any projections extending through the table plate. The side members 24 are, as indicated clearly in Fig. 3, provided with a bent portion 25 extending to points adjacent the U-shaped members 14 and their inner edges are suitably slotted. These side members 24 may, therefore, be attached to the angle members 18 attached to the outer sides of the legs 13 and 16 by the same bolts 21 used for attaching the angle members 18 to the U-shaped members 14 on the table plate 10.

The back portion 23 is attached to the rear flange 12 of the table plate 10 by suitable bolts 26 or other attaching means, and preferably the sides 24 and back member 23 are attached together by suitable bolts 27, the side members 24 being provided with lateral flanged portions 28 for that purpose.

To assemble the table 10 on the supporting units or legs 16 the bolts 21 are placed in the slots formed in the flanges 15 of the U-shaped members 14 and the table placed over the legs 16. These bolts then extend through the holes in the angle members 18 and may have their nuts tightened to securely fasten the legs 16 to the table 10 and U-shaped members 14. The bolts 22 are then inserted and tightened to secure the plates 20 on the legs 16 to the bent down portions 12 at the back of the table plate 10. With these operations completed the legs 16 are rigidly secured to the table in a manner to rigidly support the table 10 against movement in any direction relative to the legs 16.

I claim:

1. A work-bench comprising in combination, a table plate, inverted channeled members located under and supporting said table plate, laterally extending flanges on said members spaced below said plate and legs attached to said flanges.

2. A work-bench comprising in combination, a table top, a depending flange along the rear edge thereof, members attached to the underside of said top extending forwardly and rearwardly thereof and having flanged portions spaced from said top, legs attached to the flanged portion of said members adjacent their forward ends, and legs attached to said depending flange and to the flanged portions of said members adjacent their rear ends.

3. A work-bench comprising in combination, a table plate, depending flanges formed on the front and rear edges thereof, members attached to the underside of said plate extending forwardly and rearwardly, legs attached to said members adjacent their forward ends, and legs attached to said rear depending flange and to said members adjacent their rear ends, the front depending flange having a portion extending under the front edge of said table plate.

4. A work-bench comprising in combination, a table plate, depending flanges formed on the front and rear edges thereof, members having laterally extending flanges thereon attached to the underside of said table plate and extending forwardly and rearwardly,

legs attached to the flanges of said members adjacent their forward ends, and legs attached to said rear depending flange and to the flanges of said members adjacent their rear ends.

5. A work-bench comprising in combination, a table top, a flange depending from its rear edge, forward and rearward extending members attached to the underside of said top, legs having angles attached thereto connecting said legs in pairs and attached to said members adjacent their forward ends by said angles, and legs attached to said flange and to said members adjacent their rearward ends.

6. A work-bench comprising in combination a table top, flanged U-shaped members attached to the underside of said table top, leg structures comprising a rear and a front leg having a member connecting their upper ends, and means to detachably connect said leg structures to the flanges of said U-shaped members.

7. A work-bench comprising in combination, a table plate, supporting members welded to the underside of said table plate and having laterally extending flanges spaced below said table plate, and legs attached to the under side of said flanges.

8. A work-bench comprising in combination, a table plate, members located under and supporting said table plate, said members having web portions and horizontal portions extending from said web portions in one direction for supporting said table plate and lateral flanges extending from said web portions in the opposite direction and spaced from said table plate, and legs attached to the under side of said flanges.

JAMES HERBERT COATES.