March 21, 1950 H. S. SHELDON 2,501,542

HAMMER TOOL

Filed Oct. 15, 1947 2 Sheets-Sheet 1

FIG. 1

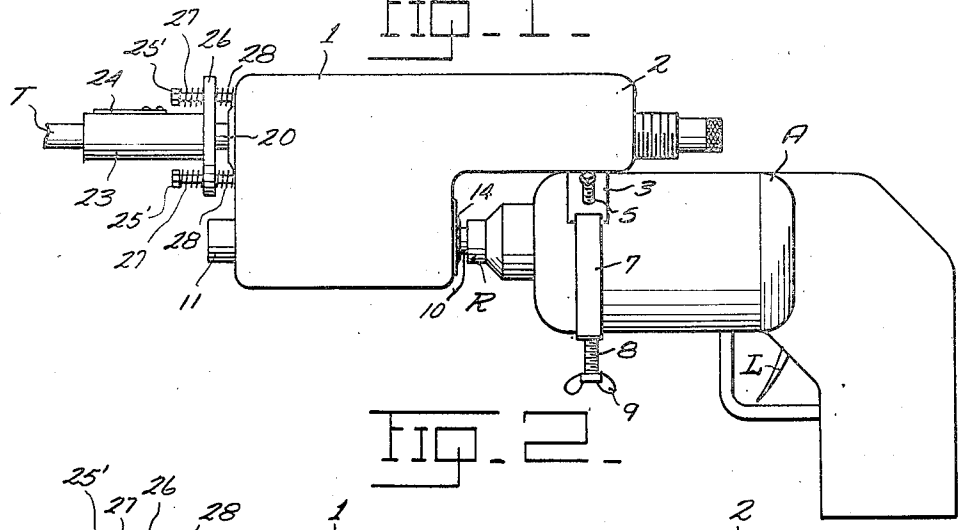

FIG. 2

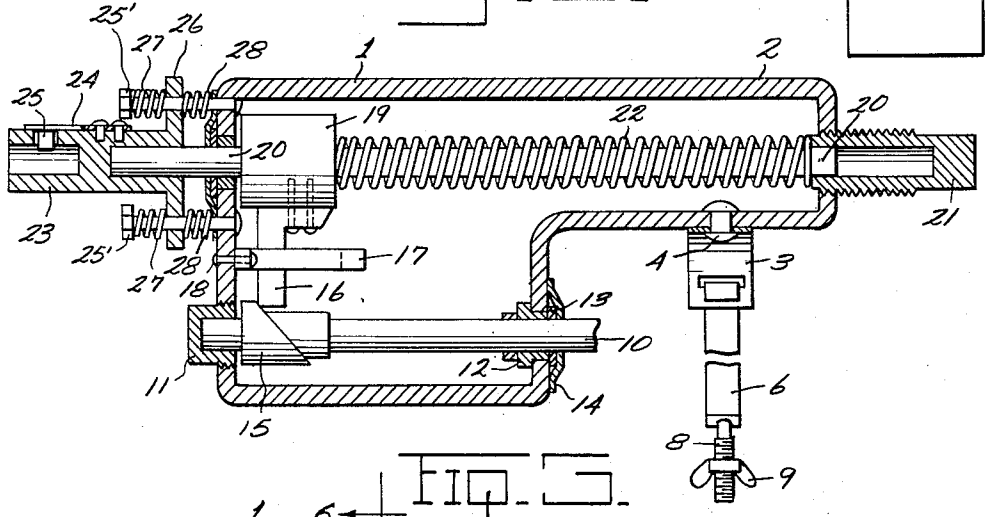

FIG. 3

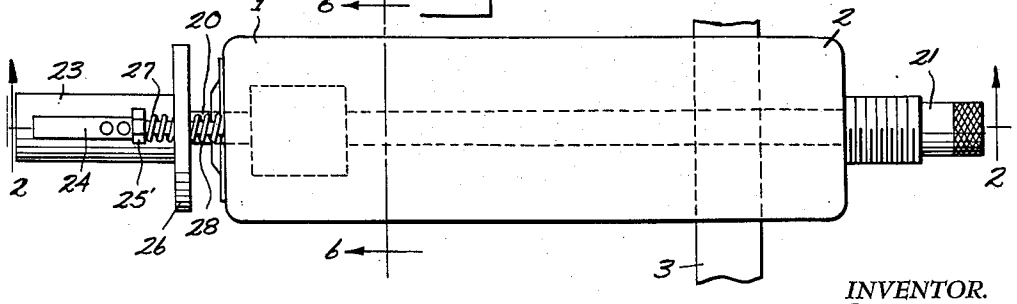

INVENTOR.
HAROLD S. SHELDON,

BY Victor J. Evans & Co.

ATTORNEYS

March 21, 1950 H. S. SHELDON 2,501,542

HAMMER TOOL

Filed Oct. 15, 1947 2 Sheets-Sheet 2

FIG. 4.

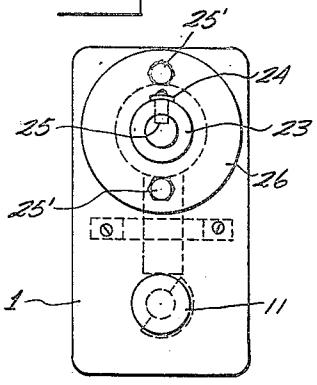

FIG. 5.

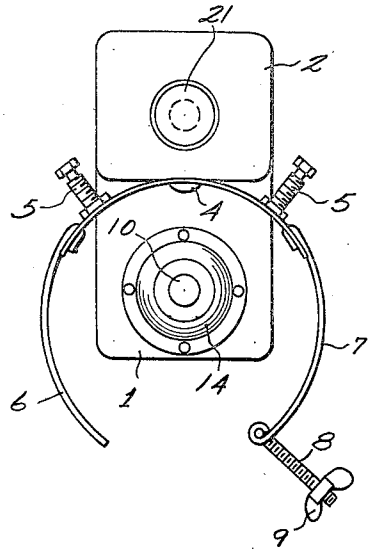

FIG. 6.

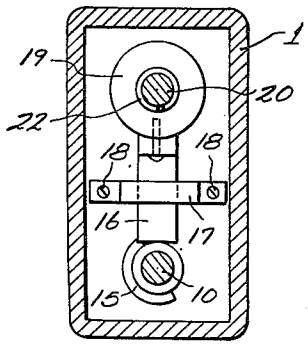

FIG. 8.

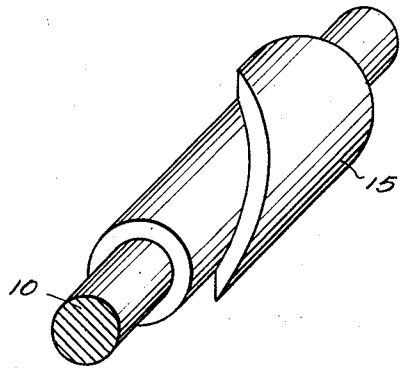

FIG. 7.

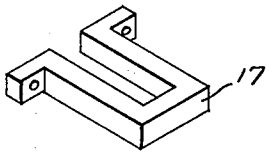

INVENTOR.
HAROLD S. SHELDON,
BY Victor J. Evans & Co.

ATTORNEYS

Patented Mar. 21, 1950 2,501,542

UNITED STATES PATENT OFFICE

2,501,542

HAMMER TOOL

Harold S. Sheldon, Tekoa, Wash.

Application October 15, 1947, Serial No. 779,931

1 Claim. (Cl. 125—33)

1

My present invention relates generally to portable motor-operated and manually controlled machine tools or implements, and more specifically to an improved hammer tool and operating mechanism of the reciprocating, rotary cam actuated type, and designed for interchangeable use as a portable power-operated hammer, wood chisel, scaling chisel, piercing punch, rock drill, and other similar power tools.

The novel operating mechanism of my invention, as an attachment, is adapted for combination with and receives power from a motor, as an electric motor, which is manually controlled to supply rotary power and motion that is translated, or converted by the operating mechanism into reciprocating motion and power for a tool-holder having selective interchangeable tools.

The invention consists in certain novel combinations and arrangements of parts that may with facility be manufactured at low cost of production, and assembled with convenience to constitute a quick-acting reciprocating machine tool of the portable type that is simple in construction and operation, and which may be handled with ease in the performance of its required functions.

In the accompanying drawings I have illustrated a complete example of a physical embodiment of my invention in which the parts are combined and arranged in accord with one mode I have devised for the practical application of the principles of my invention. It will however be understood that changes and alterations are contemplated and may be made in these exemplifying drawings and mechanical structures, within the scope of my claim, without departing from the principles of the invention.

Figure 1 is a view in side elevation showing a physical embodiment of my invention mounted as an attachment on a portable motor-operated and manually controlled implement including an electric motor.

Figure 2 is a vertical longitudinal sectional view of the housing and its operating mechanism, separated from its driving mechanism, as at line 2—2 of Fig. 3.

Figure 3 is a top plan view of the implement of Fig. 2.

Figure 4 is a front end view of the implement of my invention.

Figure 5 is a rear end elevation of the implement showing its attaching means to the actuating motor-tool.

Figure 6 is a transverse vertical sectional view at line 6—6 of Fig. 3; Figure 7 is a perspective

2

view of the guide for the reciprocating cam-member; and Figure 8 is a perspective view showing a portion of the cam shaft, head, and cam.

In order that the general arrangement and utility of parts may readily be understood I have shown in the assembly view Fig. 1 an electrically operated and manually controlled, portable, machine tool A having the usual control trigger or lever L, and a rotary chuck or holder R that is operated by the electric motor within the machine tool.

The operating mechanism of my invention, which converts or translates rotary motion and power into reciprocating motion and power, is mounted within a housing 1 having a rear extension 2, and the housing is detachably fastened to the tool A by means of a metallic clamp or arcuate band 3 riveted at 4 to the housing, and provided with set screws 5, 5 for impingement against the exterior cylindrical face of the tool A. A pair of metallic straps 6 and 7 are attached to the clamp or band 3, and these straps are fastened about the tool A by means of a quick-detachable fastener or clamp bolt 8 and its wing nut 9.

The operating mechanism of my invention is connected to and receives power from the tool A through a rotary cam shaft 10 that is rigidly fixed, as indicated in Fig. 1, in the rotary chuck R to rotate therewith, and the cam shaft is journaled in bushings 11 and 12 of the housing 1.

The interior parts of the housing operate in an oil bath, and the housing bearings are provided with leak-proof gaskets 13, and retaining plates 14 attached on the exterior face of the housing to seal the bearings and prevent loss of the oil bath.

The cam shaft, or rotary output shaft of the operating mechanism, is provided with a head 15 within the front end of the housing, and this cam-head 15 co-acts with a complementary reciprocable arm 16 that is guided in its movements within a U-shaped guide bracket 17 bolted at 18 to the inner face of the front wall of the housing.

The angular cam arm is rigidly mounted on or integral with an enlarged head 19 of a reciprocating power-bolt, or hammer shaft 20, the rear end of which is slidably mounted in a socket-bushing 21 that is adjustably threaded in an opening in the rear end wall of the extension.

An expansible power spring 22 is coiled about the reciprocating bolt and interposed between the bolt head 19 and the inner end of the bushing 21, and the bushing may be adjusted to change the

tension of the spring and thereby vary the blow of the reciprocating bolt or hammer shaft.

With each revolution of the cam shaft and its transversely arranged cam-head, rotary motion and power from the electric motor is translated through the cam arm into reciprocating motion and power of the spring-projected bolt, and the spring supplies the power blow or out-stroke of the bolt or hammer shaft.

The front end of the power bolt **20** is slidably mounted in a bushing in the front wall of the housing, and the leak proof devices **13** and **14** are provided at this bearing to prevent loss of the oil bath.

The front end of the reciprocating bolt, which is longitudinally disposed in the housing and extension in parallelism with the rotary cam shaft, projects through the front wall of the housing and this end of the bolt is equipped with a tool holder or socket-barrel **23** that is resiliently supported with relation to the housing and adapted to receive and retain a selected tool T of an interchangeable set of tools included in the equipment of the implement. A quick-detachable fastener for the tool T may include a usual spring latch **24** fastened on the exterior of the holder and provided with a latch head or detent **25** that projects through a radial slot in the holder for engagement with an annular groove or socket in the interchangeable tool T.

For resiliently mounting the holder to reciprocate with the spring-bolt for the absorption of shocks and vibrations occasioned in the operating parts of the mechanism, the holder is connected with the housing by means of a pair of bolts **25** that pass through holes in an exterior flange **26** of the holder with their rear ends threaded in the front wall of the housing. Two sets of compensating springs **27** and **28** are interposed between the bolt-heads and the flange of the tool holder and between the flange and the front outer face of the housing, and these springs absorb the shocks and strains that would otherwise be transmitted to the craftsman handling the machine tool.

Having thus fully described my invention, what I claim as new and desire to secure by Letters Patent is:

In the implement described, the combination with a housing, a co-planar rotary shaft and a reciprocating spring-projected bolt mounted in the housing, and a transversely arranged cam on the shaft and an arm rigid with the bolt for coaction with the cam for reciprocating the bolt, and a U-shaped guide for the arm of a tool-holder mounted on an exterior end of the bolt, a flange on the holder, a pair of bolts rigid with the flange, a pair of springs interposed between the bolt-heads and the flange, and a second pair of springs interposed between the flange and a wall of the housing.

HAROLD S. SHELDON.

REFERENCES CITED

The following references are of record in the file of this patent:

UNITED STATES PATENTS

Number	Name	Date
1,789,082	Grutzbach	Mar. 24, 1931
1,889,441	Haas	Nov. 29, 1932
2,252,017	McCrery	Aug. 12, 1941
2,260,070	Wilhide	Oct. 21, 1941
2,298,845	Schmied	Oct. 13, 1942