PCT WORLD INTELLECTUAL PROPERTY ORGANIZATION
International Bureau

INTERNATIONAL APPLICATION PUBLISHED UNDER THE PATENT COOPERATION TREATY (PCT)

(51) International Patent Classification 5 :
B01D 24/00, 29/00, 39/00

A1

(11) International Publication Number: **WO 94/19085**

(43) International Publication Date: 1 September 1994 (01.09.94)

(21) International Application Number: PCT/US94/01732

(22) International Filing Date: 16 February 1994 (16.02.94)

(30) Priority Data:
08/019,709 19 February 1993 (19.02.93) US

(60) Parent Application or Grant
(63) Related by Continuation
US 08/019,709 (CON)
Filed on 19 February 1993 (19.02.93)

(71)(72) Applicant and Inventor: LEHRER, Robert [US/US]; 1502 Seton Villa Lane, Wilmington, DE 19809 (US).

(74) Agent: PEZZNER, Ashley, I.; Connolly and Hutz, P.O. Box 2207, Wilmington, DE 19899 (US).

(81) Designated States: AT, AU, BB, BG, BR, BY, CA, CH, CN, CZ, DE, DK, ES, FI, GB, HU, JP, KP, KR, KZ, LK, LU, LV, MG, MN, MW, NL, NO, NZ, PL, PT, RO, RU, SD, SE, SK, UA, US, UZ, VN, European patent (AT, BE, CH, DE, DK, ES, FR, GB, GR, IE, IT, LU, MC, NL, PT, SE), OAPI patent (BF, BJ, CF, CG, CI, CM, GA, GN, ML, MR, NE, SN, TD, TG).

Published
With international search report.

(54) Title: FILTER FOR FLUIDS

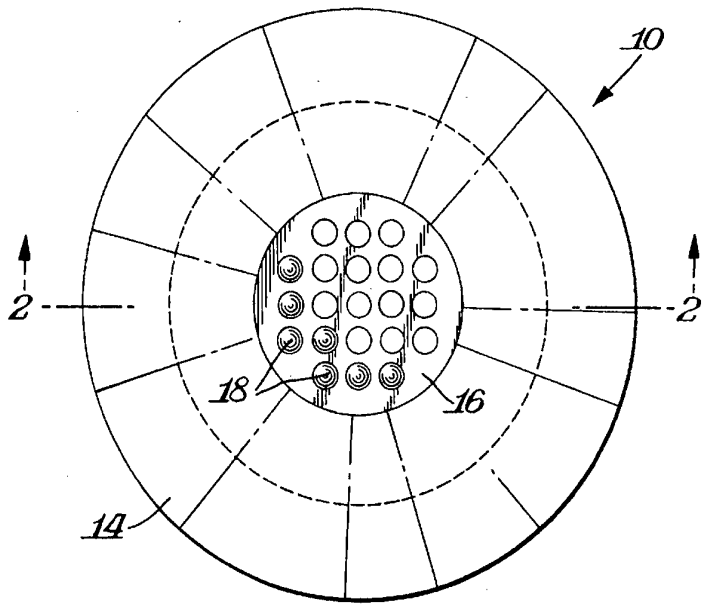

(57) Abstract

A filter (10) for fluids includes a pair of layers (12, 14) or multiple layers or pairs of materials joined together to form a laminate having a fluid contacting surface (16). A plurality of spaced pockets (18) is formed between the layers of material in the contacting surface. The layers of material are fluid permeable at the pockets whereby fluid may flow through the laminate at the pockets (18). The fluid contacting surface is fluid impermeable except for the pocket to require the fluid passing through the laminate to be confined to flowing through the pockets. Filter members (20) are in the pockets for removing any contaminants from the fluid.

FOR THE PURPOSES OF INFORMATION ONLY

Codes used to identify States party to the PCT on the front pages of pamphlets publishing international applications under the PCT.

AT	Austria	**GB**	United Kingdom	**MR**	Mauritania
AU	Australia	**GE**	Georgia	**MW**	Malawi
BB	Barbados	**GN**	Guinea	**NE**	Niger
BE	Belgium	**GR**	Greece	**NL**	Netherlands
BF	Burkina Faso	**HU**	Hungary	**NO**	Norway
BG	Bulgaria	**IE**	Ireland	**NZ**	New Zealand
BJ	Benin	**IT**	Italy	**PL**	Poland
BR	Brazil	**JP**	Japan	**PT**	Portugal
BY	Belarus	**KE**	Kenya	**RO**	Romania
CA	Canada	**KG**	Kyrgystan	**RU**	Russian Federation
CF	Central African Republic	**KP**	Democratic People's Republic of Korea	**SD**	Sudan
CG	Congo			**SE**	Sweden
CH	Switzerland	**KR**	Republic of Korea	**SI**	Slovenia
CI	Côte d'Ivoire	**KZ**	Kazakhstan	**SK**	Slovakia
CM	Cameroon	**LI**	Liechtenstein	**SN**	Senegal
CN	China	**LK**	Sri Lanka	**TD**	Chad
CS	Czechoslovakia	**LU**	Luxembourg	**TG**	Togo
CZ	Czech Republic	**LV**	Latvia	**TJ**	Tajikistan
DE	Germany	**MC**	Monaco	**TT**	Trinidad and Tobago
DK	Denmark	**MD**	Republic of Moldova	**UA**	Ukraine
ES	Spain	**MG**	Madagascar	**US**	United States of America
FI	Finland	**ML**	Mali	**UZ**	Uzbekistan
FR	France	**MN**	Mongolia	**VN**	Viet Nam
GA	Gabon				

FILTER FOR FLUIDS

Background of the Invention

Various beverages are made by flowing a fluid or liquid, such as hot water, through a beverage making substance, such as coffee grounds or tea. Other beverages or fluids are also mixed with water including food concentrates such as cocoa, baking or cooking mixes, juices, flavors, milk, soup, infant formula. It is known to hold the beverage making substance such as coffee grounds in a filter material when the water passes through the coffee grounds in making coffee. The known practices of utilizing a filter for holding the beverage making substances, however, does not provide for any removal of contaminants before or after the water reaches the beverage making substances. As a result, the contaminants can have adverse effects, such as causing a bitterness in the resultant beverage. Additionally, it would be desirable if contaminants could be removed from the liquid to help avoid the ingestion of extraneous substances which are potentially harmful to living species.

It would also be desirable if contaminants could be removed from other fluids such as in the regeneration of spent cooking or lubricating oils or if unwanted material could be removed from such fluids as milk, baby formula, wine and alcoholic beverages, as well as industrial fluids.

Summary of the Invention

An object of this invention is to provide a filter which is intended to be used in the making of beverages wherein contaminants are removed from the fluid before or after the fluid contacts the beverage making substances.

A further object of this invention is to provide such a filter which is simple to manufacture and easy to use.

A yet further object of this invention is to provide such a filter which is intended to be used in removing contaminants from fluids prior to or during the time such fluids are used for any purpose whatsoever, for example, for removing contaminants from a wide variety of fluids ranging from human drinking substances to commercial fluids such as gasoline or spent cooking or lubricating oils.

A still further object of this invention is to provide such a filter which could be used with conventional beverage making equipment without requiring any modification of such equipment.

In accordance with one practice of this invention a fluid filter for removing contaminants from a fluid before the fluid contacts the beverage making substances comprises a pair of layers of material which are joined together to form a laminate. The laminate has a fluid contacting surface with a plurality of spaced pockets between the layers in the fluid contacting surface. The fluid contacting surface is fluid impermeable except at the pockets so that the fluid passing through the laminate must pass only through the pockets. The pockets contain filter members which may be an absorbent or adsorbent material such as activated carbon, particularly activated charcoal, or silica or silicates (or derivatives or modifications thereof) or zeolites or chitin (including other derivatives of chitin such as chitosan) to clarify or decontaminate or regenerate or remove any contaminants from the

fluid before or after the fluid reaches the beverage making substances.

The pockets containing the filter members may extend toward the outer circumference to provide total filtration. The pockets may be in circular patterns to facilitate bending the filter to its proper size.

In a particular practice of this invention the filter is formed by having the laminate extend peripherally outwardly beyond the contacting surface so that the outward peripheral extension could serve as mounting means when the filter is, for example, placed in a basket containing beverage making substances such as coffee grounds.

In a further practice of this invention a circular array of pockets containing filter members is provided outwardly beyond the generally flat fluid contacting surface to permit some passage of fluid through the filter above the flat fluid contacting surface.

In an alternative practice of the invention the fluid filter is mounted under the coffee grounds and functions during/after the fluid contacts the grounds.

In a further practice of this invention the laminate is of circular shape and terminates at the liquid contacting surface. The filter is mounted in, for example, a basket by the use of a plurality of legs which extend from a liquid impervious member disposed between the laminate layers. The liquid impervious member would have holes located at each of the pockets to permit the filter members to be located in the pockets and to permit the flow of liquid thereto.

In a further practice of this invention one layer of the laminate would terminate at the contacting surface while the other layer would extend outwardly beyond the contacting surface to the end of the legs of the liquid impervious intermediate member.

The Drawings:

Figure 1 is a top plan view of a filter member in accordance with one embodiment of this invention;

Figure 2 is a cross-sectional view taken through Figure 1 along the line 2-2;

Figure 3 is a cross-sectional view in elevation showing the filter of Figures 1-2 mounted in a basket containing beverage making substances;

Figure 4 is a top plan view of a beverage filter in accordance with a further embodiment of this invention;

Figure 5 is a cross-sectional view taken through Figure 4 along the line 5-5;

Figure 6 is a cross-sectional view in elevation showing the filter of Figures 4-5 mounted in a basket;

Figure 7 is a plan view of yet another beverage filter in accordance with this invention;

Figure 8 is a cross-sectional view taken through Figure 7 along the line 8-8;

Figure 9 is a cross-sectional view in elevation showing the filter of Figure 7-8 mounted in a basket;

Figure 10 is a plan view of still yet another filter in accordance with this invention;

Figure 11 is a cross-sectional view taken through Figure 10 along the line 11-11;

Figure 12 is a cross-sectional view in elevation showing the filter of Figures 10-11 mounted in a basket;

Figure 13 is a plan view of yet a further filter in accordance with this invention;

Figure 14 is a cross-sectional view taken through Figure 14-14 of Figure 13 with the filter mounted in a basket;

Figure 15 is a cross-sectional view in elevation showing use of the invention for removing contaminants from spent cooking or lubricating oils;

Figures 16-17 are plan views of alternative forms of filter structure in accordance with this invention; and

Figure 18 is a cross-sectional view in elevation of still yet another form of filter structure in accordance with this invention.

Detailed Description

The present invention will be described in particular detail in accordance with an illustrated practice where the filter is used for making coffee. Thus, the fluid is a liquid, specifically hot water. It is to be understood, however, that the invention may be practiced with other fluids ranging from those used for making beverages or drinks for human consumption to any other contaminant containing fluid such as gasoline, kerosene, spent lubricating or cooking oils and other fluids which are not ingested by humans or animals. In such practices specific filter members would be selected in accordance with the contaminant being removed.

Figures 1-3 illustrate a fluid filter 10 in accordance with this invention for making coffee. As shown therein fluid filter 10 is in the form of a pair of layers of material 12,14 which are laminated together in at least their central portion to form a fluid contacting surface 16. A plurality of pockets with circular or other geometric shape in the form of a grid 18 is formed at spaced locations in the fluid contacting surface. The pockets 18 are filled with one or more filter members or media 20 such as activated carbon, particularly in charcoal form. Media 20 acts as absorbent or adsorbent or ion-exchange material. Layers 12,14 are made of a filter type material which would permit the flow of fluid through the material. The fluid contacting surface, however, has a coating or intermediate film (such as a thermoplastic or thermosetting resin) throughout except where pockets 18 are located to render the composite formed by layers 12 and 14 fluid impermeable over the fluid contacting surface 16 except for the location of pockets 18. The coating also provides a degree of stiffness to the fluid contacting area 16 which is useful in properly locating the fluid contacting area 16 in a basket as later described. If desired layers 14 and 16 may be secured together throughout their surface area or the layers may be separate from each other as illustrated in Figure 2 in the peripheral portion of the laminate which extends outwardly beyond the fluid contacting surface 16. The outwardly extending peripheral portion functions as mounting means when filter 10 is in use.

Figure 3 shows filter 10 mounted in a conventional basket 22 such as used for making coffee. As shown therein coffee grounds 24 are placed in a conventional coffee filter 26 at the bottom of basket 22. A spout 28 is provided centrally in basket 22 to permit water passing through the coffee grounds to flow into a coffee dispenser. Basket 22 includes conventional flanges 30 or other means for mounting the basket 22 in a dispenser, such as a coffee pot.

As shown in Figure 3 filter 10 is placed in basket 22 above coffee grounds 24. The stiffened central fluid contacting surface 16 is dimensioned to generally extend to the edge of basket 22 with the annular extension 17 of the laminate resting on the inner surface of coffee filter 26. The filter 10 is dimensioned so that the filter terminates coterminous with the upper edge of basket 22.

In use, water would be placed in filter 10 and would be forced to flow through pockets 18 because the remainder of filter contacting surface 16 is fluid (water) impermeable. By confining the flow of water through pockets 18 any contaminants from the water would be removed by the adsorbent or absorbent or ion-exchange filter members 20. Thus, the water reaching the coffee grounds 24 would be prepurified so that the resulting coffee would not have a bitterness to its taste and the ingestion of extraneous substances which are potentially harmful would be avoided.

As indicated, the preferred filter material 20 comprises one or more absorbent or adsorbent or ion-exchange materials, such as activated carbon and more particularly

activated charcoal. The activated charcoal may be used alone or in combination with one or more other adsorptive or absorptive or sieving or reactive or sequestering or otherwise tenacious materials. Suitable materials would be activated silica, silicates, zeolite and chitin or derivatives or modifications of these materials. The filter material should be resistant to heat or hot water and not affect the resultant beverage. Layers 12,14 may be sheets of filter paper or other similarly functional porous material, such as teabag material, cloth or synthetic or natural polymeric materials. Filter 10 should be of a size, shape and composition to be useful in the flow path of fluids, particularly water, at ambient or elevated temperature, to remove undesirable naturally containing or deliberately added physical or chemical contaminants before the fluid is used in extraction from beverage producing substances. The particular materials would be selected to withstand temperature and other environmental conditions encountered in their particular end use.

The filter 10 may be a single use product, although it is within the scope of this invention for filter 10 to be reusable. Use of filter 10 would be accomplished in conjunction, for example, with commonly found brewing appliances in which cold water is heated and flows by gravity through the bed of particulate coffee or tea to a receiving vessel. The invention, however, may be practiced for filtering liquids, not necessarily water in the making of other beverages such as hot chocolate, juices, etc. where the liquid is at an elevated temperature or at room temperature or at a chilled tempera-

ture, and for the clarification, regeneration or decontamination of fluids such as lubricating oils, cooking oil and wines.

Figures 4-6 illustrate a variation of filter wherein the filter 10A is generally along the same lines of construction as filter 10. The differences, however, are in the provision of a circular array of pockets 32 having filter material 34 in the annular extension 17 of filter 10A. In this embodiment an intermediate layer 36 is mounted between inner and outer layers 12,14. Layer 36 may be of any suitable material, such as polyethylene, which would be used to hold the filter paper layers 12,14 together. Layer 36 would have holes at each of the pockets to permit the filter material 20,34 to be placed in the pockets 18,32. In this embodiment it is preferred that the various layers be laminated together throughout their surface. Additionally, the filter 10A should be fluid impervious (except for pockets 32) beyond the central fluid contacting surface 16. This may be conveniently accomplished by having intermediate layer 36 made of a fluid impermeable material.

A further difference between filters 10 and 10A is in the greater density of filter pockets 18 in the central fluid contacting surface 16 for filter 10A as compared with filter 10. The provision of the additional filter pockets 32 permits fluid to pass through filter 10A at a higher elevation than simply though the fluid contacting surface 16. This in conjunction with the greater density of filter pockets permits the fluid to pass at a faster rate into contact with the

beverage making substances 24. Where the fluid contacting surface 16 its slightly spaced from the inner surface of basket 22 the filter does not create a seal against basket 22 and fluid is thereby permitted to flow through pockets 32 and down the sides of brewing basket 22.

Figures 7-9 illustrate yet a further filter 10B in accordance with this invention. As shown therein the laminate is confined to the central fluid contacting surface 16. The intermediate layer 36B is in the form of a disk having the same size as the laminate but having a plurality of outwardly extending legs 38. Additionally a tab 40 extends beyond the periphery of the laminate. Legs 38 function to mount fluid contacting surface 16 in brewing basket 22 elevated above beverage making substances 24. This would be preferred where it is desired to assure that the pockets 18 with the filter material 20 should be maintained out of contact with the substance 24.

Figure 9 illustrates the peripheral edge of fluid contacting surface 16 to be slightly spaced inwardly from the inner surface of brewing basket 22. The amount of non-filtered fluid escaping through the filter above surface 16 does not significantly affect the effectiveness of the filter. If desired, however, the fluid contacting surface 16 could extend to the edge of brewing basket 22 so that fluid could not fall directly into contact with the beverage making substance 24 without passing through pockets 18. In addition, an upstanding peripheral wall inclined at the same angle as the inner surface of brewing basket 22 could be provided

around fluid contacting surface 16 to create a dam for further assuring that the fluid will pass only through the pockets 18.

In use tab 40 would be bent upwardly in a direction opposite the downward bend of legs 38 to provide a convenient means for grasping filter 10B when it is desired to remove filter 10B from brewing basket 22.

Figures 10-12 illustrate yet another filter 10C in accordance with this invention. As shown therein lower layer 12C terminates at the periphery of fluid contacting surface 16 while upper layer 14C extends beyond fluid contacting surface 16 and ends coterminous with the ends of legs 38C. In this practice of the invention, as shown in Figure 12, filter 10C could be elevated from beverage making substances 24 by bending legs 38C upwardly so that the legs 38C rest against the upper portion of brewing basket 22. Since the legs and filter material, namely layer 14C, would be accessible from the top of brewing basket 22 a tab, such as tab 40, is not necessary.

The various filters may be formed in any suitable dimensions and of any suitable materials capable of meeting the criteria of this invention. For example, the material of layers 12,14 should be strong enough to hold the filter material 20. The material must, however, be porous where the pockets are located so that fluid or liquid such as hot water could pass though the laminate. In a preferred practice of the invention the layers 12,14 are made of filter paper which is from 5 to 40 mils in thickness and preferably 10 to 20 mils thick, coated with from 0.5 to 6 mils of a thermoplastic. The

thermoplastic should have a melting point above the boiling point of water and below where the paper will degrade upon applying heat and pressure. The preferred structure is paper about 14 mils thick coated on both sides with about 0.5 mils of polyethylene. One-half mil of thermo-plastic should be adequate for adhesion upon applying heat and pressure and it is about the thinnest layer that can be applied without discontinuity problems. The filter should have a diameter of 3 to 5 inches for home use and up to 18 inches for use in commercial establishments. The activated carbon or charcoal would have a surface area of 50 to 2500 square meters per gram. Generally, the laminate would have from 5 to 50 pockets containing the filter material 20.

The central fluid contacting surface 16 may, for example, have a diameter or 2.56 inches. Pockets 32 of filter 10A are preferably arranged in a circular array having a diameter of 3 inches. It is to be understood, however, that the pockets 32 need not be coarctate with each other, but could be staggered or even randomly arranged to provide the added ability of permitting a faster rate of water or other fluid to be filtered.

Figures 13-14 illustrate yet another embodiment of this invention wherein the fluid filter 10D is of the same general construction as filters 10 and 10A in that the filter is of circular shape. As shown in Figure 13, however, the fluid contacting surface 16 includes a large plurality of pockets 20 which are arranged in concentric circles to maximize the flow of fluid through fluid contact surface 16.

In the illustrated embodiment there are eight rows of pockets concentrically arranged around the center most pocket. Where each pocket is, for example, 0.28 inches in diameter and where the liquid contact surface 16 is 6.5 inches in diameter, then the area of flow for the 238 pockets would comprise about 50% of the liquid contact surface area. Additionally there would be about 7.2 pockets per square inch.

A particularly advantageous feature of having the concentrically arranged pockets is that concentric fold lines 50 could be provided between the adjacent rows of pockets so that the horizontal portion of the fluid contact surface 16 could be adjusted in diameter by bending at an appropriate fold line to accommodate the particular size basket or other article into which the filter 10D is inserted. Similar adjustments in the overall size of filter 10D can also be achieved by providing weakened or perforated concentric lines 52 and if desired radial perforated lines 54 joining the concentric perforated lines 52 so that the size of filter 10D can be reduced by tearing at the appropriate perforated line 52 to accommodate the particular basket or other container into which filter 10D is inserted. The radial perforated lines 54 are provided to facilitate access to the arcuate perforated lines 52.

Figure 14 shows a further variation in the use of a filter such as filter 10D wherein the filter 10D is mounted below the coffee filter 26. This exemplifies the practice of the invention which may be used with other variations of the fluid filter wherein the filtering by the fluid filter would

take place after the fluids passes through the coffee grounds 24 or other substances. In this practice the added filter 26 is provided for initial filtering. Such other filter, however, may be omitted.

It is therefore to be understood that the invention may be practiced for filtering a fluid either before or after the fluid flows through a substance such as a beverage making substance. It may also be practiced for decontaminating fluids initially and for purposes of regeneration.

The invention is particularly advantageous in that it provides for the removal of organic and other contaminants such as metals in water after, for example, heating the water in a heating chamber of a brewing appliance. Advantageously the removal takes place either before or after the water contacts the bed of coffee, tea or other concentrate or beverage making substance. This serves to enhance the flavor of the resultant extract or mixture and helps avoid ingestion of such contaminants in the water by removing the contaminants before or after the contaminants reach the beverage making substances. Where the invention is used for specific uses having known contaminants filter materials can be selected which are particularly effective with those specific contaminants. The filter made in accordance with this invention can be easily produced in an economical manner and can be easily used in a conventional brewing basket or other suitable carrier device.

Figure 15 exemplifies the use of the invention to make clear that the invention may be practiced for removing

contaminants or otherwise clarifying various types of materials and not simply for filtering beverages, such as coffee. As shown in Figure 15 the invention is used in connection with the regeneration or clarification of spent cooking or lubricating oils. A feed hopper 60 would be provided into which the oils would be fed and then discharged through a dispensing outlet 62 toward a filter 64. The filter 64 is made in accordance with the various previously described embodiments wherein a plurality of pockets 66 would be formed in the filter material. In the illustrated embodiment of Figure 15 the filter is made in the form of an endless belt of any suitable width mounted about spaced rollers 68 and movable beneath the dispensing spout 62 so that the oil 70 being discharged through spout 62 would be forced to contact filter 64 before passing into collection container 72. Collection container 72 and filter 64 as well as the roller 68 may be mounted within overflow collector 74. Overflow collector 74 thus receives any excess unfiltered oil falling from filter belt 64 as shown in the upper right hand portion of discharge collector 74. The clarified oil 76 is collected in the bottom of collection chamber 72. The unclarified oil falls to the bottom of overflow collector 74. Collector 74 may contain a discharge spout 78 for removing heavier contaminants which would sink to the bottom of collector 74. If desired, the untreated oil may be conveyed through recirculating line 80 back into feed hopper 60 as indicated by the arrow 82. Arrow 84 indicates the feed of fresh oil into feed hopper 60.

It is to be understood that the system shown in Figure 15 is merely for exemplary purposes to make clear that the invention may be broadly practiced for treating a wide range of different materials wherein the specific filter media would be selected in accordance with the type of contaminant to be removed. Thus, for example, with spent cooking or lubricating oil a filter material, such as silica would be more preferred than, for example, charcoal. Other filter media would be selected in accordance with the fluid being treated. Similarly, various other arrangements could be used for disposing the filter into contact with the fluid. What is important, however, is that the filter contain a fluid impervious surface with fluid pervious pockets which contain the filter media so that the fluid being treated is forced to flow through the pockets and thus be subjected to the action of the filter media. It is also to be understood that although the invention in its preferred practice utilizes a fluid contacting surface which is horizontal the fluid contacting surface may be disposed at an angle so that the fluid flows down the surface while portions of the fluid pass through the pockets in the filter.

The various figures illustrate the pockets holding the filter media to be spaced from each other. It is to be understood that in order to maximize the filter action the pockets may be formed in the fluid contacting surface to be as close as practical to each other. Figure 16, for example, illustrates a filter 10D having a fluid contacting surface 16D. The fluid contacting surface is in grid form wherein the

layers of the filter are joined together along narrow lines 90 by heat sealing or any other suitable manner. As a result, a plurality of pockets 18D is formed between the grid lines 90. Each pocket 18D would hold filter media. By this arrangement substantially the entire area of fluid contacting surface 16D includes filter media in the plurality of pockets 18D.

Although Figure 16 illustrates the grid which forms the filter media containing pockets to have perpendicular grid lines forming square type pockets, it is to be understood that the pockets may be of any geometric shape including individual pockets having shapes which differ from each other. What would control the shape of each pocket would be the grid lines. Thus, Figure 17 exemplifies a filter 10E having a fluid contacting surface 16E with grid lines 92 forming diamond shaped pockets 18E. The illustration of diamond shaped pockets is merely to exemplify one of the possible shapes of the pockets other than being circular as, for example, in Figure 1 or square as, for example, in Figure 16.

Figure 18 illustrates a further variation of the invention wherein a composite filter comprises a pair of filter 10F and 10G which could be of any of the forms previously described. Figure 18 is included herein to exemplify how a multi-layering of filter media could be achieved. In the illustrated form the pockets 18F and 18G are arranged in a staggered fashion. The pockets, however, could be superimposed above each other or could be in any other arrangement. This variation particularly lends itself to pockets formed from grid lines. The arrangement of Figure 18 also makes it

possible to readily use different types of filter media 20F and 20G in individual pockets. It is to be understood that although two sets of filters are illustrated in Figure 18 any multiple number of sets may be used. It is also to be understood that although Figure 18 illustrates each filter 10F and 10G to comprise a separate set of two layers 12F, 14F and 12G, 14G it is possible to omit one of the intermediate layers. Thus, for example, layer 12G may serve as the bottom layer for the filter media 20G and layer 14F may serve as the top layer for filter media 14F with a single layer being between layers 12G and 14F to separate the pockets 18F and 18G.

What is Claimed is:

1. A fluid treating member comprising a pair of layers of material joined together to form a laminate having a peripheral edge, said laminate having a fluid contacting surface, a plurality of spaced pockets between said layers of said material in said fluid contacting surface, said pockets being spaced from each other and spaced from said edge, said layers of material completely surrounding each of said pockets to define the limits of each of said pockets and to isolate said pockets from said edge and to form closed pockets, said layers of material being fluid permeable at said pockets whereby fluid may flow through said laminate at said pockets, said fluid contacting surface being fluid impermeable except at said pockets to require the fluid passing through said laminate to be confined to flowing through said pockets in paths of flow spaced from said edge, fluid treating media in said pockets for treating the fluid passing through said member, and said paths of flow being confined to first passing through one of said layers of said laminate where said one layer is fluid permeable and then through said pockets in contact with said fluid treating media and then through the other of said layers of said laminate where said other layer is fluid permeable.

2. The member of Claim 1 wherein said layers terminate at the periphery of said fluid contacting surface.

3. The member of Claim 1 wherein said fluid contacting surface is of circular shape, said pockets being arranged in a plurality of sets of pockets, each of said sets

being arranged coarcuately in the form of a circle, and said circles of said sets being concentric circles.

4. The member of Claim 3 including a plurality of bend lines between adjacent sets of said concentric circles.

5. The member of Claim 4 wherein said member is of circular shape, and a plurality of concentric annular perforated lines to permit the diameter of said filter to be reduced by removing annular sections of said filter at selected perforated lines.

6. The member of Claim 3 wherein said pockets comprise about 50% of the area of said fluid contacting surface.

7. The member of Claim 1 wherein said fluid contacting surface is in grid form with said pair of layers of material being joined together along grid lines, and the open area between said grid lines comprising said pockets.

8. The member of Claim 1 wherein said plurality of spaced pockets comprises a first set of pockets, a second set of pockets mounted to at least a further layer of material joined to said pair of layers of material to form a second set of spaced pockets mounted against said first set of spaced pockets, and filter media being in said second set of pockets.

9. The member of Claim 1 wherein said fluid treating media is filter media for removing contaminants from the fluid.

10. The member of Claim 1 wherein said layers are coated with a fluid impermeable coating except at said pockets.

11. The member of Claim 1 wherein said fluid contacting surface is of non-collapsible shape retaining form having sufficient stiffness whereby said fluid contacting surface remains generally horizontal when said member is mounted in a brewing basket or the like.

12. The member of Claim 1 wherein one of said layers terminates at said fluid contacting surface and the other of said layers extends peripherally beyond said fluid contacting surface, an intermediate member between said layers, and said intermediate member having legs which extend outwardly beyond said fluid contacting surface and terminate at the outer edge of said layer which extends beyond said fluid contacting surface.

13. The member of Claim 1, in combination with a brewing basket, said brewing basket having a bottom wall with dispensing means, beverage making substances mounted in a support filter on said bottom wall, and said member being disposed above said beverage making substances whereby fluid flows through said pockets and into contact with said beverage making substances.

14. The member of Claim 1, in combination with a brewing basket, said brewing basket having a bottom wall with dispensing means, beverage making substances mounted in a support filter on said bottom wall, and said member being disposed below said support filter whereby fluid flows through said beverage making substance and said support filter before passing through said pockets.

15. The member of Claim 14 wherein said filter media is selected from at least one material which is an adsorbtive, absorbtive or ion-exchange material.

16. The member of Claim 14 wherein said filter media is activated carbon.

17. A fluid filter for removing contaminants from a fluid comprising a pair of layers of material joined together to form a laminate, said laminate having a fluid contacting surface, a plurality of spaced pockets between said layers of said material in said fluid contacting surface, said layers of material being fluid permeable at said pockets whereby fluid may flow through said laminate at said pockets, said fluid contacting surface being fluid impermeable except at said pockets to require the fluid passing through said laminate to be confined to flowing through said pockets, filter media in said pockets for removing any contaminants from the fluid passing through said filter, said fluid contacting surface being of non-collapsible shape retaining form having sufficient stiffness whereby said fluid contacting surface remains generally horizontal when said filter is mounted in a brewing basket or the like.

18. The filter of Claim 17 including mounting means extending outwardly beyond said fluid contacting surface for mounting said filter in a brewing basket or the like.

19. The filter of Claim 18 wherein at least one of said layers extends peripherally beyond said fluid contacting surface to comprise said mounting means.

20. The filter of Claim 19 wherein both of said layers extend peripherally beyond said fluid contacting surface, and portions of said layers extending beyond said fluid contacting surface being non-laminated with respect to each other.

21. The filter of Claim 18 including an intermediate member between said layers, said intermediate member being fluid impermeable, a plurality of holes in said intermediate member, and each of said pockets being located at a respective one of said holes.

22. The filter of Claim 17 wherein said intermediate member includes legs extending outwardly beyond said fluid contacting surface to comprise said mounting means.

23. The filter of Claim 17 wherein said layers terminate at the periphery of said fluid contacting surface.

24. The filter of Claim 18 wherein said layers are coated with a fluid impermeable coating except at said pockets.

25. The filter of Claim 18 wherein said layers extend peripherally outwardly beyond said fluid contacting surface, said layers being laminated together in an annular region extending outwardly from said fluid contacting surface, a plurality of pockets located in said annular region, filter media being in each of said pockets, and said annular region being fluid impervious except for said pockets.

26. The filter of Claim 18 wherein one of said layers terminates at said fluid contacting surface and the other of said layers extends peripherally beyond said fluid

contacting surface, an intermediate member between said layers, and said intermediate member having legs which extend outwardly beyond said fluid contacting surface and terminate at the outer edge of said layer which extends beyond said fluid contacting surface.

27. A fluid filter for removing contaminants from a fluid comprising a pair of layers of material joined together to form a laminate, said laminate having a fluid contacting surface, a plurality of spaced pockets between said layers of said material in said fluid contacting surface, said layers of material being fluid permeable at said pockets whereby fluid may flow through said laminate at said pockets, said fluid contacting surface being fluid impermeable except at said pockets to require the fluid passing through said laminate to be confined to flowing through said pockets, filter media in said pockets for removing any contaminants from the fluid passing through said filter, and said layers being coated with a fluid impermeable coating except at said pockets.

28. A fluid filter for removing contaminants from a fluid comprising a pair of layers of material joined together to form a laminate, said laminate having a fluid contacting surface, a plurality of spaced pockets between said layers of said material in said fluid contacting surface, said layers of material being fluid permeable at said pockets whereby fluid may flow through said laminate at said pockets, said fluid contacting surface being fluid impermeable except at said pockets to require the fluid passing through said

laminate to be confined to flowing through said pockets, filter media in said pockets for removing any contaminants from the fluid passing through said filter, and one of said layers terminating at said fluid contacting surface and the other of said layers extends peripherally beyond said fluid contacting surface, an intermediate member between said layers, and said intermediate member having legs which extend outwardly beyond said fluid contacting surface and terminate at the outer edge of said layer which extends beyond said fluid contacting surface.

29. A fluid filter for removing contaminants from a fluid comprising a pair of layers of material joined together to form a laminate, said laminate having a fluid contacting surface, a plurality of spaced pockets between said layers of said material in said fluid contacting surface, said layers of material being fluid permeable at said pockets whereby fluid may flow through said laminate at said pockets, said fluid contacting surface being fluid impermeable except at said pockets to require the fluid passing through said laminate to be confined to flowing through said pockets, filter media in said pockets for removing any contaminants from the fluid passing through said filter, and said filter media being activated carbon.

30. A fluid filter for removing contaminants from a fluid comprising a pair of layers of material joined together to form a laminate, said laminate having a fluid contacting surface, a plurality of spaced pockets between said layers of said material in said fluid contact surface, said

layers of material being fluid permeable at said pockets whereby fluid may flow through said laminate at said pockets, said fluid contacting surface being fluid impermeable except at said pockets to require the fluid passing through said laminate to be confined to flowing through said pockets, filter media in said pockets for removing any contaminants from the fluid passing through said filter, said fluid contacting surface being of circular shape, said pockets being arranged in a plurality of sets of pockets, each of said sets being arranged coarcuately in the form of a circle, and said circles of said sets being concentric circles, and said pockets comprise about 50% of the area of said fluid contacting surface.

31. A fluid filter for removing contaminants from a fluid comprising a pair of layers of material joined together to form a laminate, said laminate having a fluid contacting surface, a plurality of spaced pockets between said layers of said material in said fluid contacting surface, said layers of material being fluid permeable at said pockets whereby fluid may flow through said laminate at said pockets, said fluid contacting surface being fluid impermeable except at said pockets to require the fluid passing through said laminate to be confined to flowing through said pockets, filter media in said pockets for removing any contaminants from the fluid passing through said filter, in combination with a brewing basket, said brewing basket having a bottom wall with dispensing means, beverage making substances mounted in a support filter on said bottom wall, and said fluid filter

being disposed above said beverage making substances whereby fluid flows through said pockets and into contact with said beverage making substances.

32. A fluid filter for removing contaminants from a fluid comprising a pair of layers of material joined together to form a laminate, said laminate having a fluid contacting surface, a plurality of spaced pockets between said layers of said material in said fluid contacting surface, said layers of material being fluid permeable at said pockets whereby fluid may flow through said laminate at said pockets, said fluid contacting surface being fluid impermeable except at said pockets to require the fluid passing through said laminate to be confined to flowing through said pockets, filter media in said pockets for removing any contaminants from the fluid passing through said filter, in combination with a brewing basket, said brewing basket having a bottom wall with dispensing means, beverage making substances mounted in a support filter on said bottom wall, and said fluid filter being disposed below said support filter whereby fluid flows through said beverage making substance and said support filter before passing through said pockets.

33. A process for brewing coffee comprising placing coffee grounds in a coffee filter at the bottom of a brewing basket, mounting a fluid filter near the coffee grounds, directing hot water on the fluid filter, flowing the hot water though filter media in pockets in the fluid filter, removing contaminants from the water by means of the filter media, and directing the water into contact with the coffee grounds.

34. The process of Claim 33 wherein said fluid filter is mounted above the coffee grounds and the water passes through the pockets to remove contaminant therefrom before contacting the coffee grounds.

35. The process of Claim 33 wherein the fluid filter is mounted below the coffee grounds and the water passes through the coffee grounds before passing through the pockets.

36. A process for the clarification of oils, such as lubricating or cooking oils comprising discharging the oils from a feed hopper into contact with a filter having a fluid contacting surface which is impervious to the oils except for a plurality of spaced pockets containing filter media, the filter media reacting with the oils to remove contaminants therefrom and to clarify the oils passing therethrough, and collecting the clarified oils.

37. The process of Claim 36 wherein the filter is in the form of a continuous belt movably mounted under a discharge opening of the feed hopper above a collection container.

38. A system for the clarification of oils, such as cooking and lubricating oils comprising a feed hopper having a discharge opening, a collection chamber mounted below said discharge opening, a continuously moving belt having a fluid contact surface disposed between said discharge opening and said collection chamber, said contact surface being impervious to the oil except for a plurality of spaced pockets whereby the oil is forced to flow through said pockets before passing

into said collection chamber, and filter media in said pockets for clarifying the oil as it passes through said pockets.

5

Fig.1.

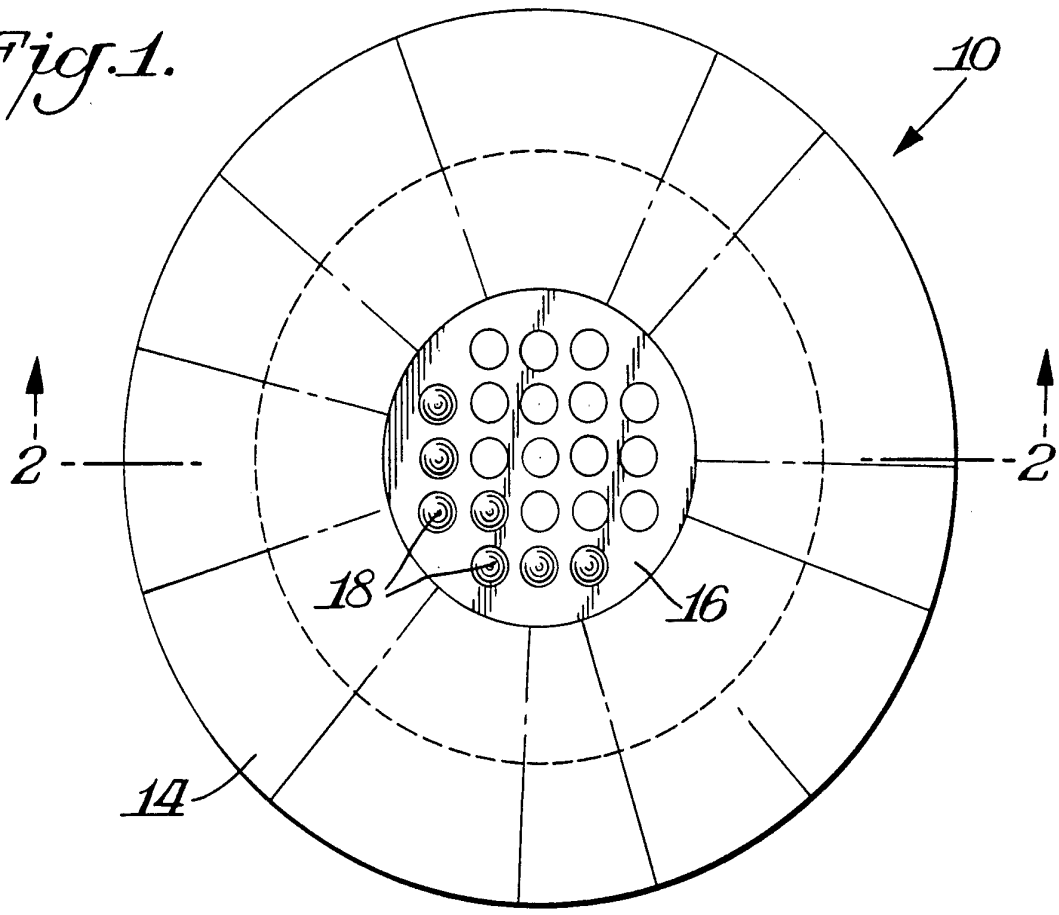

Fig.2.

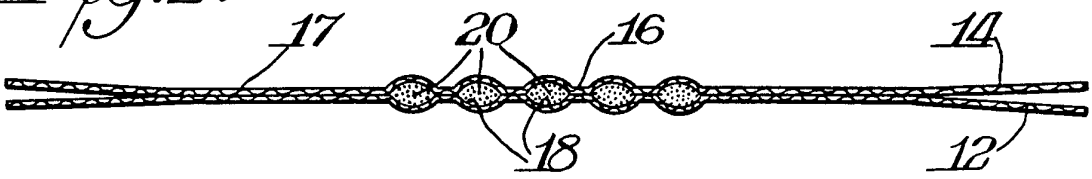

Fig.3.

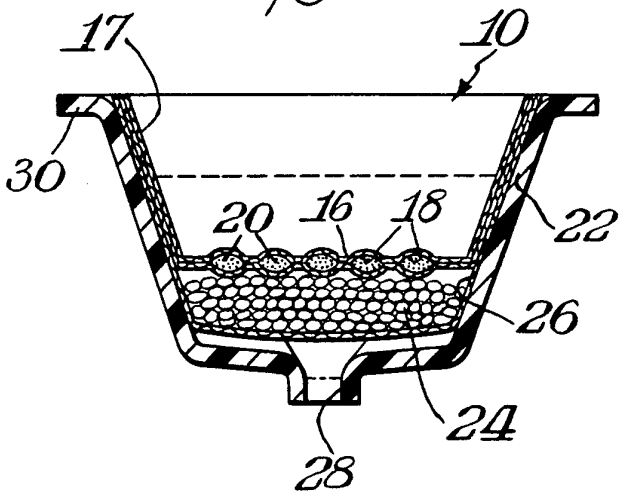

Fig. 4.

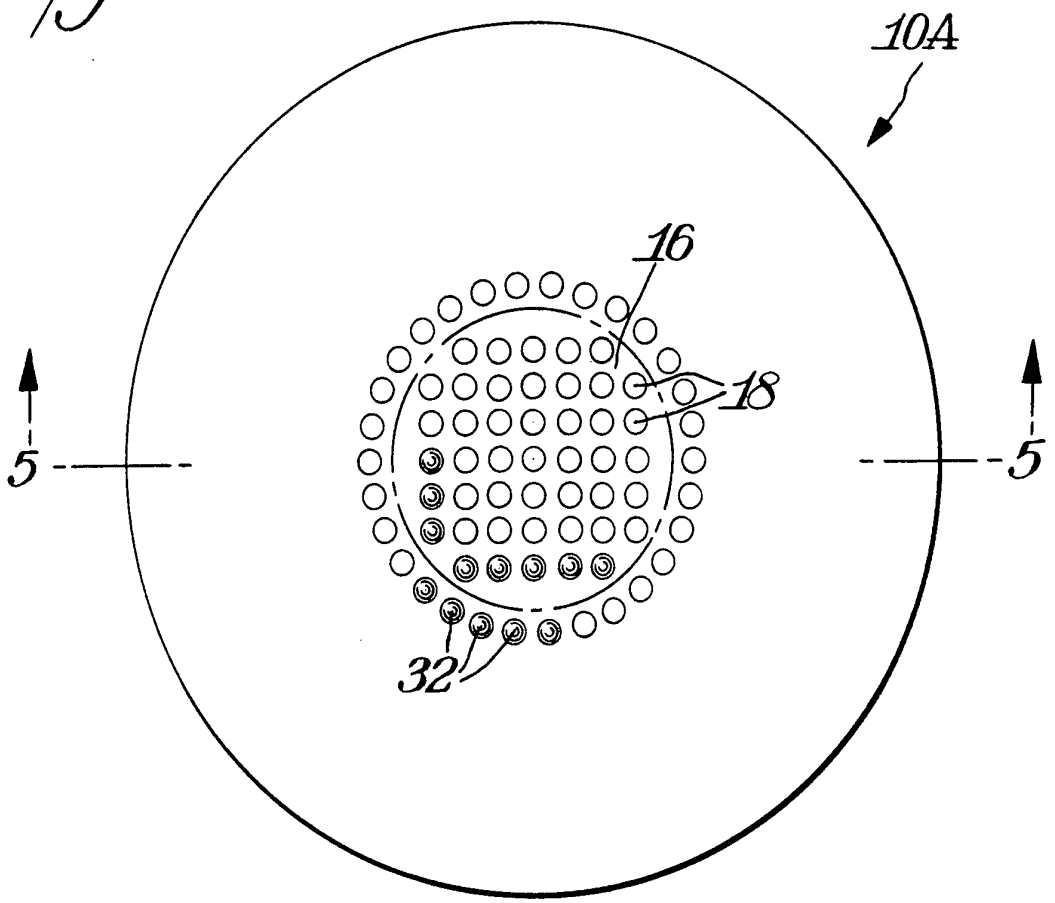

Fig. 5.

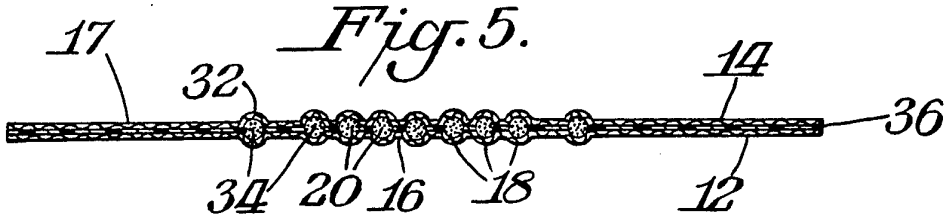

Fig. 6.

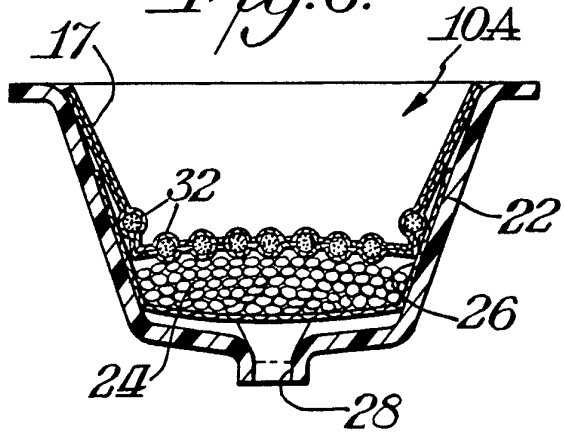

Fig. 7.

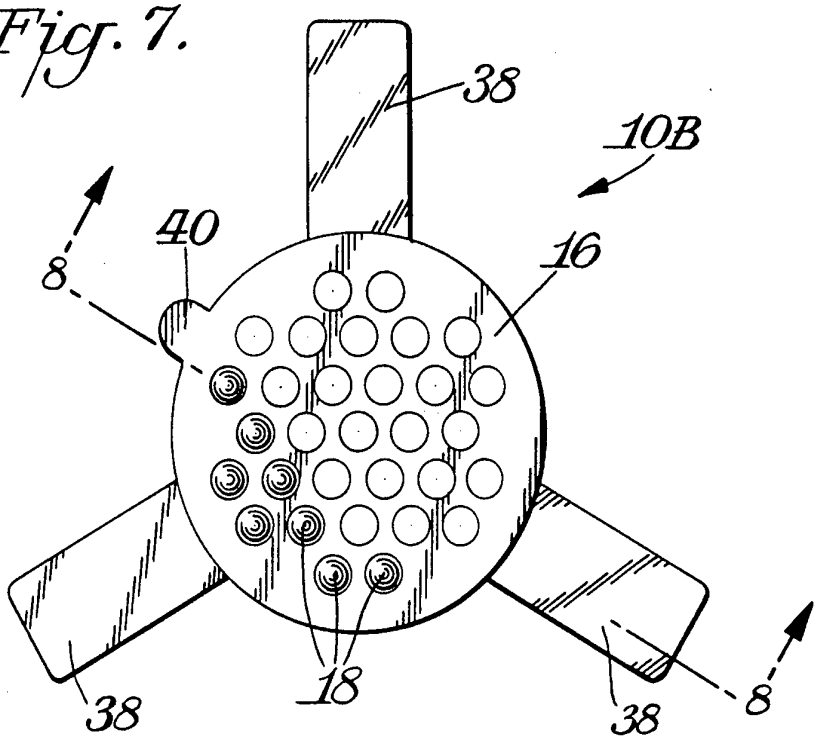

Fig. 8.

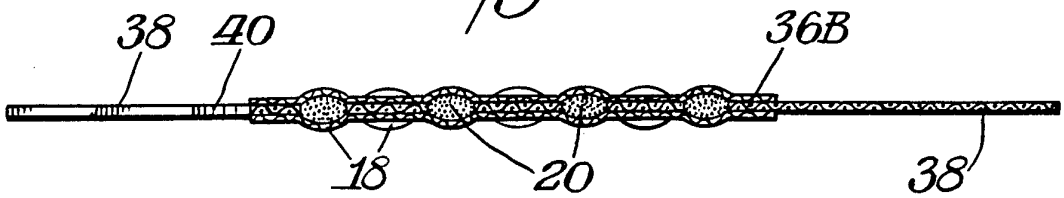

Fig. 9.

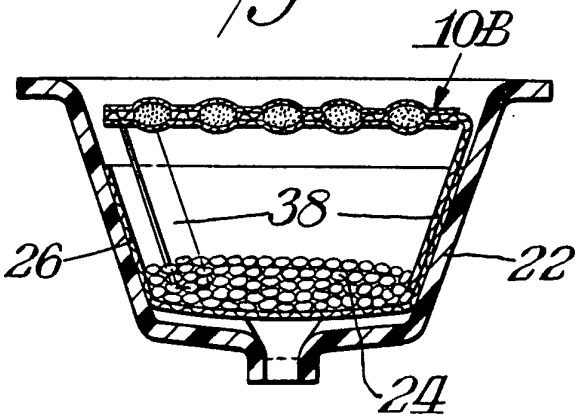

Fig. 10.

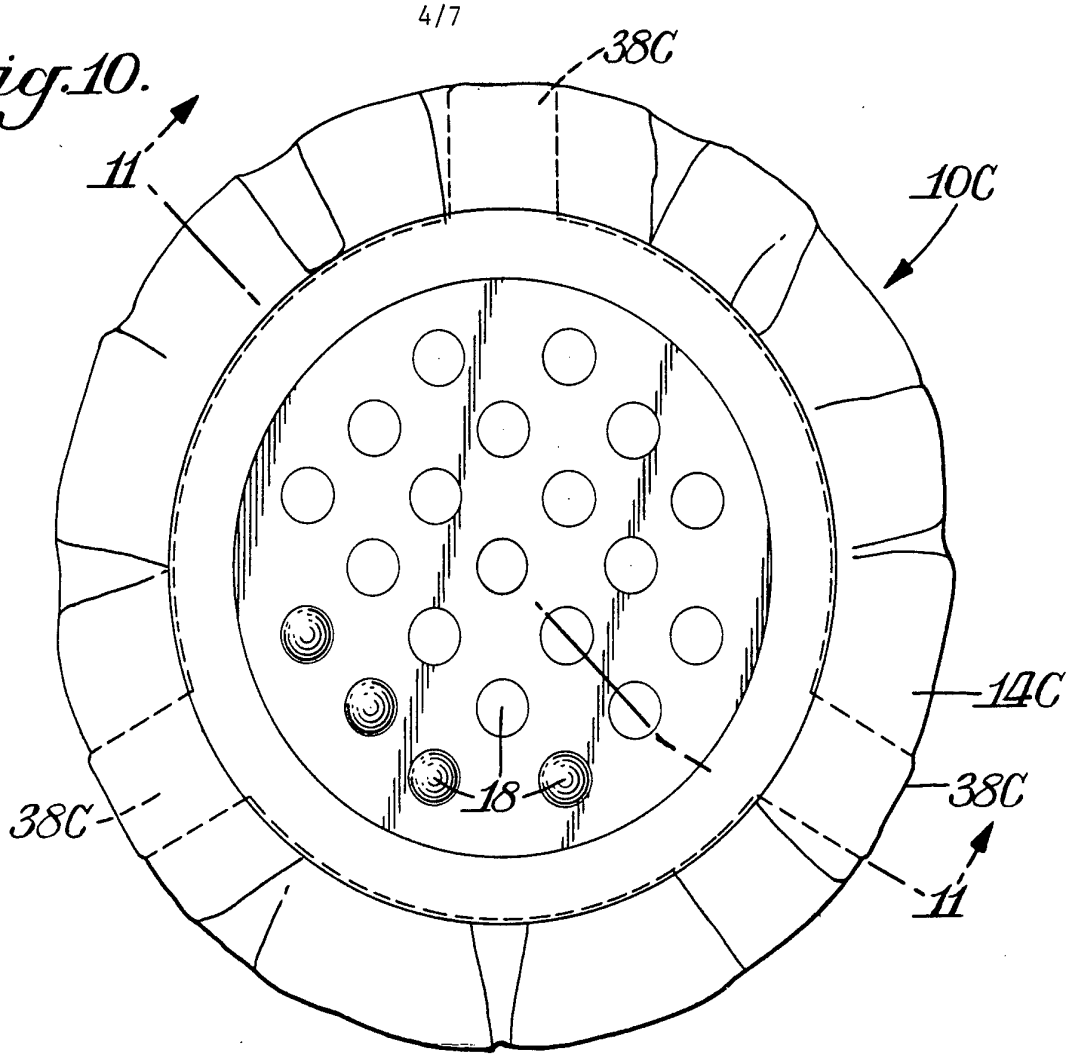

Fig. 11.

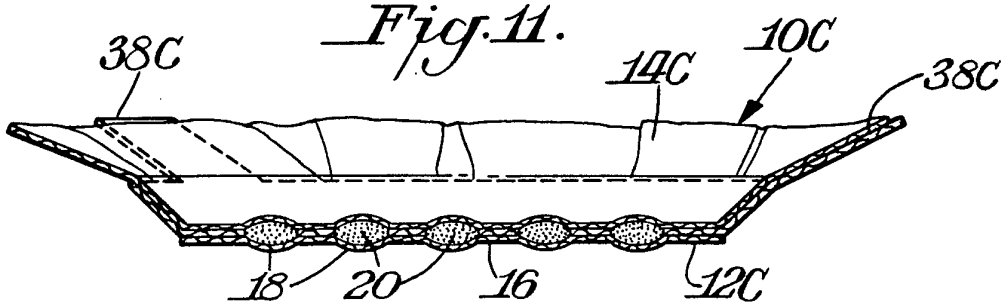

Fig. 12.

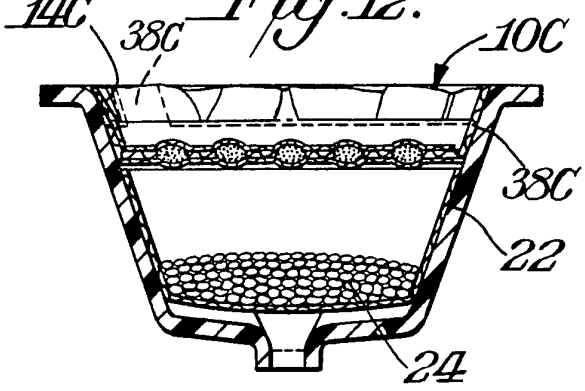

Fig. 13.

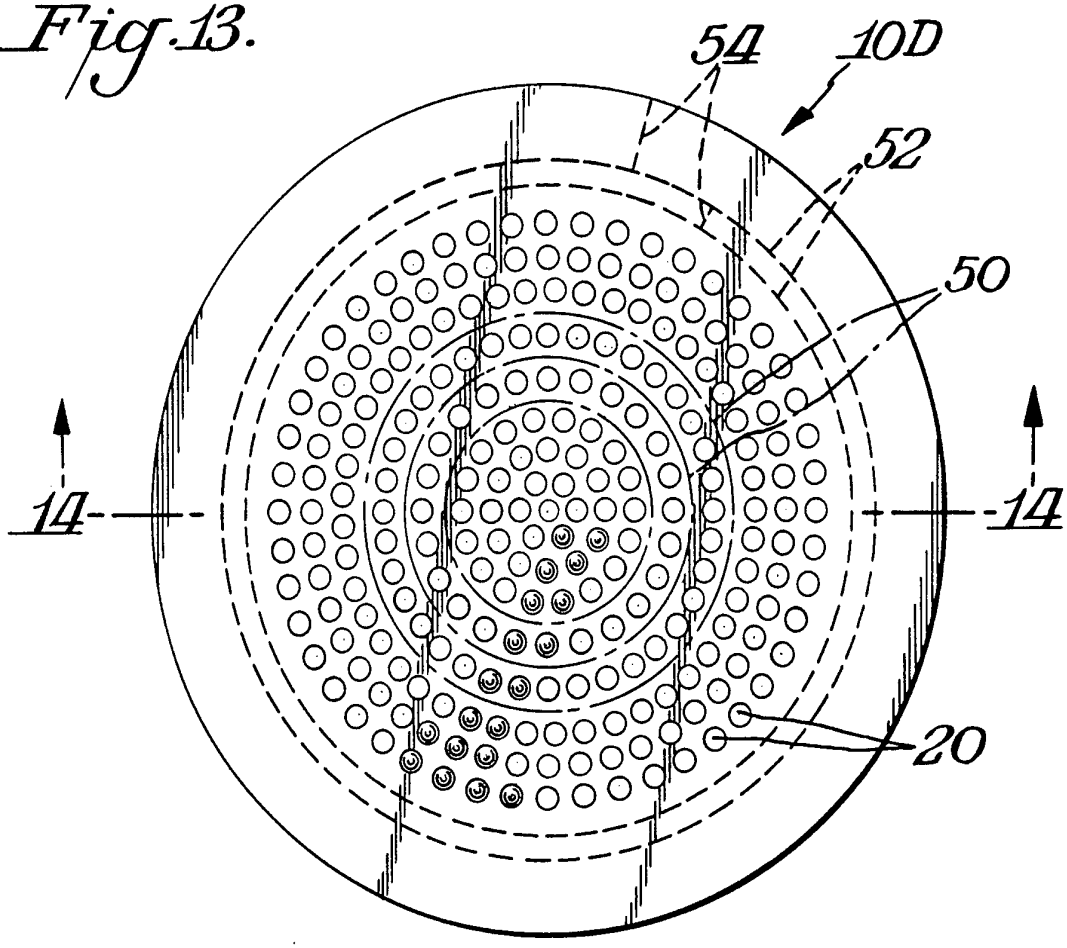

Fig. 14.

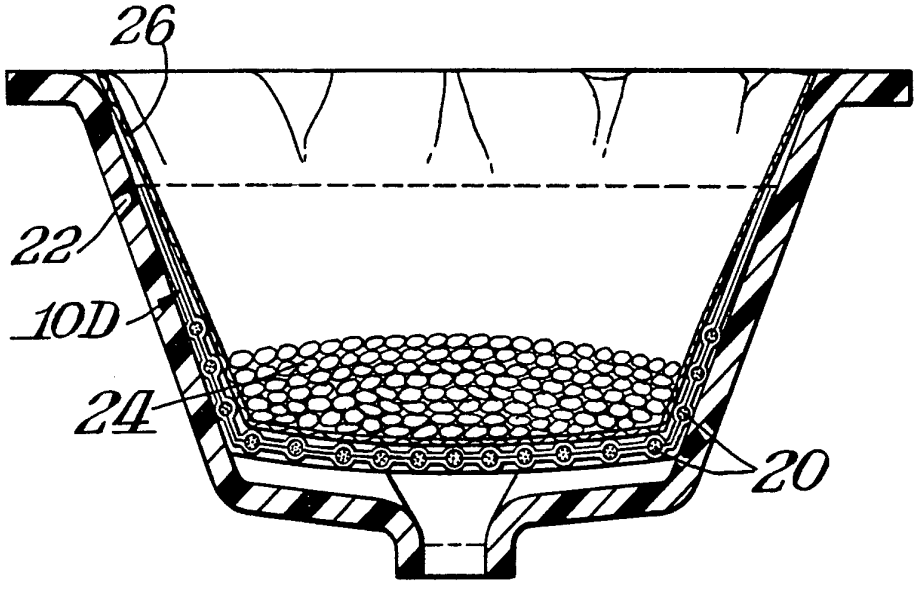

Fig 15.

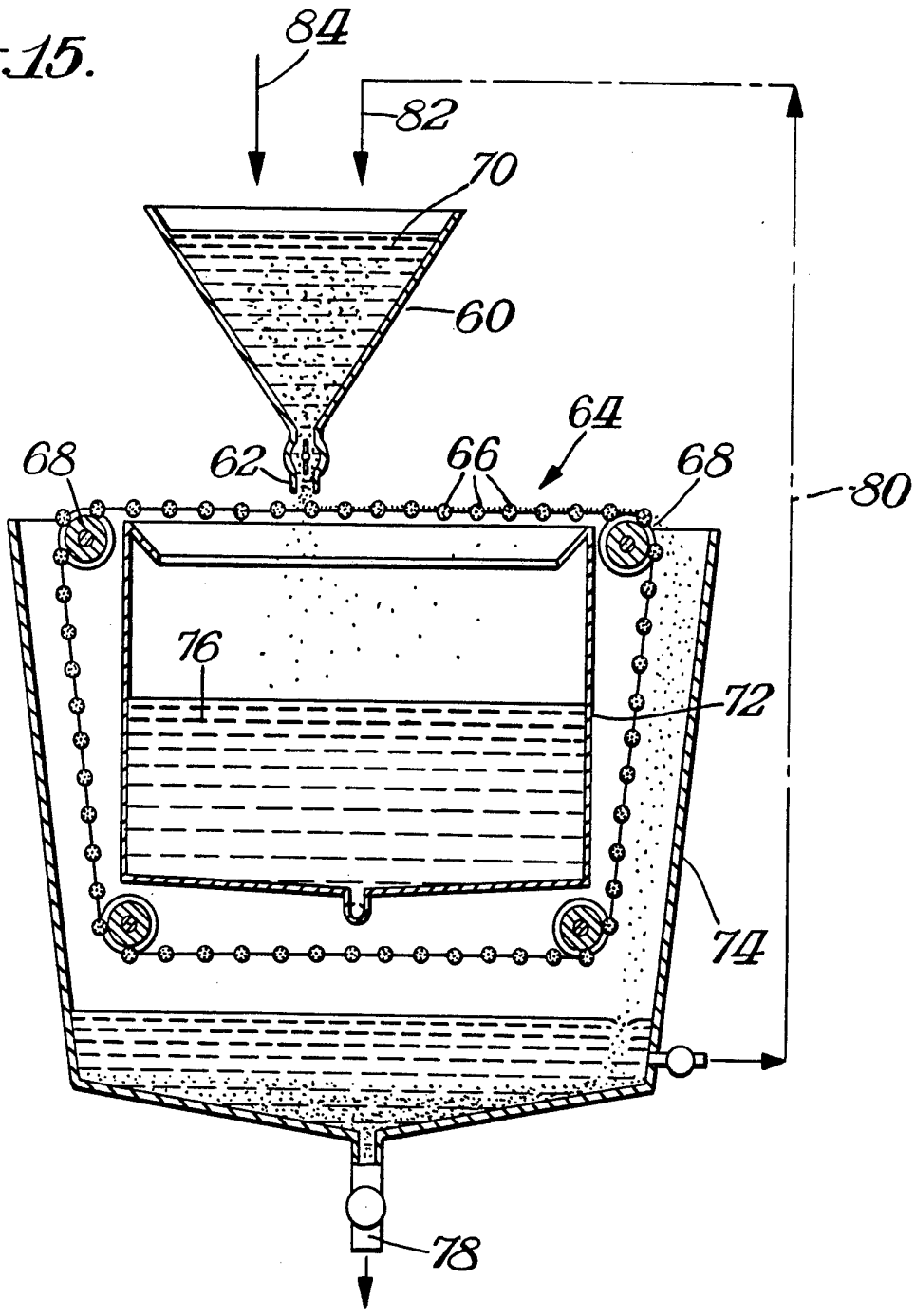

Fig. 16.

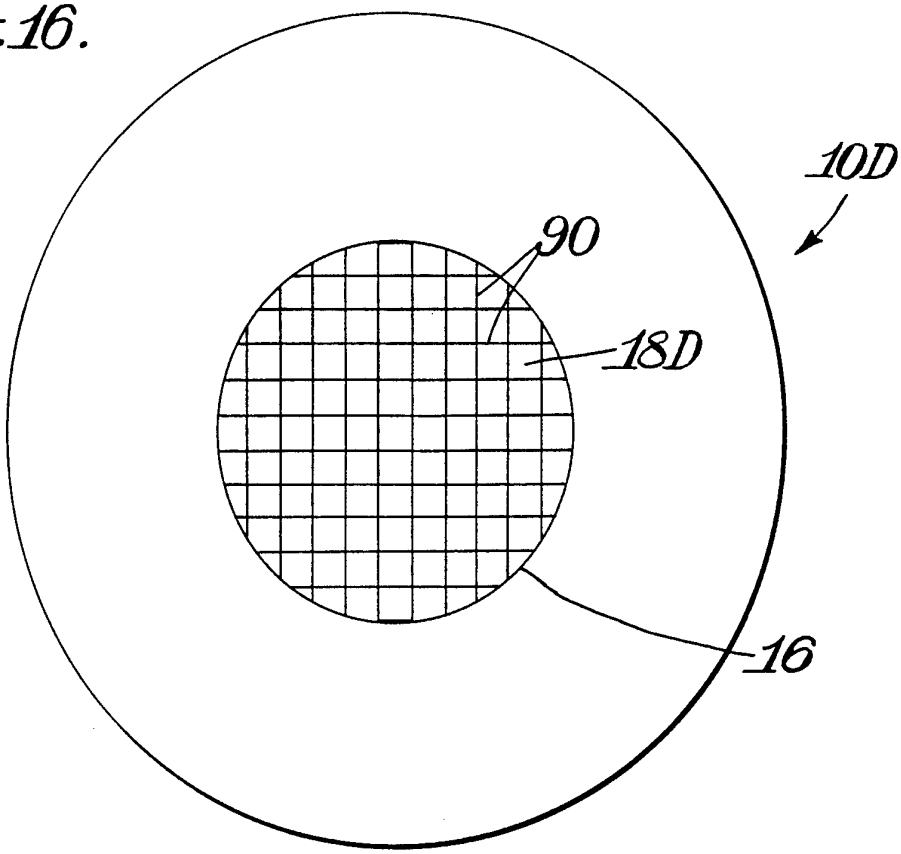

Fig. 17.

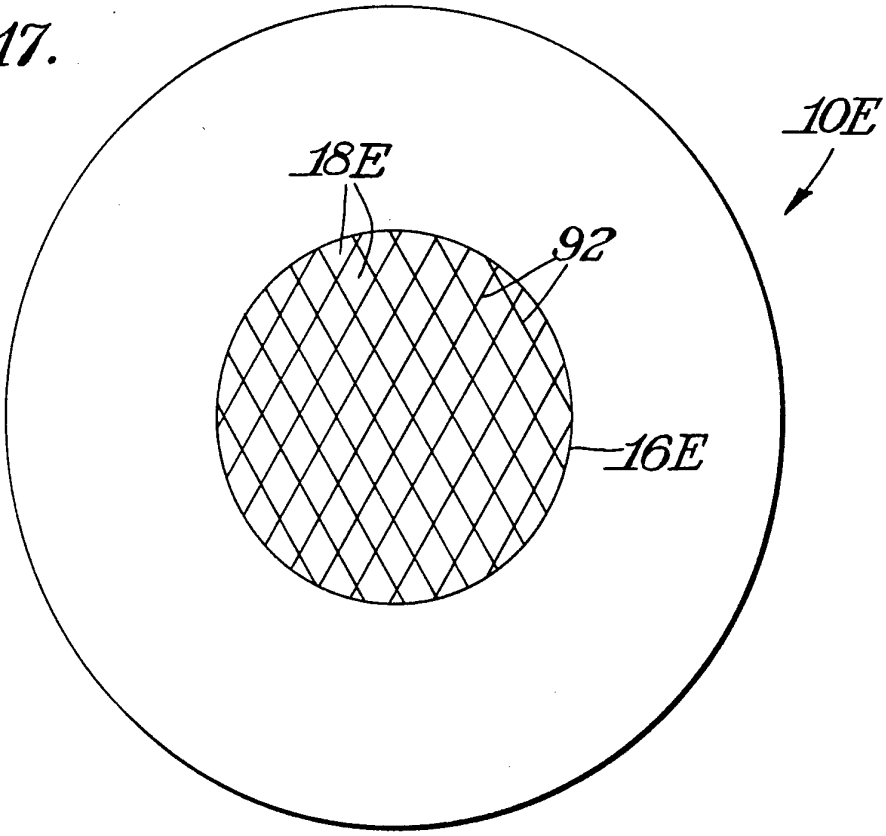

INTERNATIONAL SEARCH REPORT

International application No.
PCT/US94/01732

A. CLASSIFICATION OF SUBJECT MATTER

IPC(5) :B01D 24/00, 29/00, 39/00

US CL :Please See Extra Sheet.

According to International Patent Classification (IPC) or to both national classification and IPC

B. FIELDS SEARCHED

Minimum documentation searched (classification system followed by classification symbols)

U.S. : Please See Extra Sheet.

Documentation searched other than minimum documentation to the extent that such documents are included in the fields searched

Electronic data base consulted during the international search (name of data base and, where practicable, search terms used)

APS

C. DOCUMENTS CONSIDERED TO BE RELEVANT

Category*	Citation of document, with indication, where appropriate, of the relevant passages	Relevant to claim No.
Y	US, A 3,405,630 (WEBER III) 15 OCTOBER 1968, see entire document	33-34
Y	US, A, 4,124,492 (FUNG ET AL) 07 NOVEMBER 1978, ABSTRACT.	36
A	US, A, 3,494,468 (KOHL) 10 FEBRUARY 1968 ,COLUMN 2, LINES 37-72.	1-32
A	US, A, 3,664,095 (ASKER ET AL) 23 MAY 1972 , ABSTRACT.	1-32
A	US, A, 4,977,871 (BROWNAWELL ET AL) 18 DECMEBER 1990, ABSTRACT.	36
A	US, A, 1,876,474 (STARKEY) 06 SEPTEMBER 1932, abstract.	1-35

☐ Further documents are listed in the continuation of Box C. ☐ See patent family annex.

* Special categories of cited documents:

"A" document defining the general state of the art which is not considered to be part of particular relevance

"E" earlier document published on or after the international filing date

"L" document which may throw doubts on priority claim(s) or which is cited to establish the publication date of another citation or other special reason (as specified)

"O" document referring to an oral disclosure, use, exhibition or other means

"P" document published prior to the international filing date but later than the priority date claimed

"T" later document published after the international filing date or priority date and not in conflict with the application but cited to understand the principle or theory underlying the invention

"X" document of particular relevance; the claimed invention cannot be considered novel or cannot be considered to involve an inventive step when the document is taken alone

"Y" document of particular relevance; the claimed invention cannot be considered to involve an inventive step when the document is combined with one or more other such documents, such combination being obvious to a person skilled in the art

"&" document member of the same patent family

Date of the actual completion of the international search	Date of mailing of the international search report
26 APRIL 1994	23 MAY 1994
Name and mailing address of the ISA/US Commissioner of Patents and Trademarks Box PCT Washington, D.C. 20231 Facsimile No. (703) 305-3230	Authorized officer ANA FORTUNA Telephone No. (703) 308-3857

Form PCT/ISA/210 (second sheet)(July 1992)★

INTERNATIONAL SEARCH REPORT

International application No.
PCT/US94/01732

A. CLASSIFICATION OF SUBJECT MATTER:
US CL :

210/346, 767, 474, 486, 490, 502.1; 428/314.4; 99/295, 304, 367; 426/433, 435, 495

B. FIELDS SEARCHED
Minimum documentation searched
Classification System: U.S.

210/346, 767, 474, 486, 490, 502.1; 428/314.4; 99/295, 304, 367; 426/433, 435, 495
210/282; 208/180; 99/483