(No Model.)

H. F. WOODMANCY.

SPINDLE SUPPORT FOR SPINNING AND TWISTING MACHINES.

No. 455,525. Patented July 7, 1891.

Fig. 1.

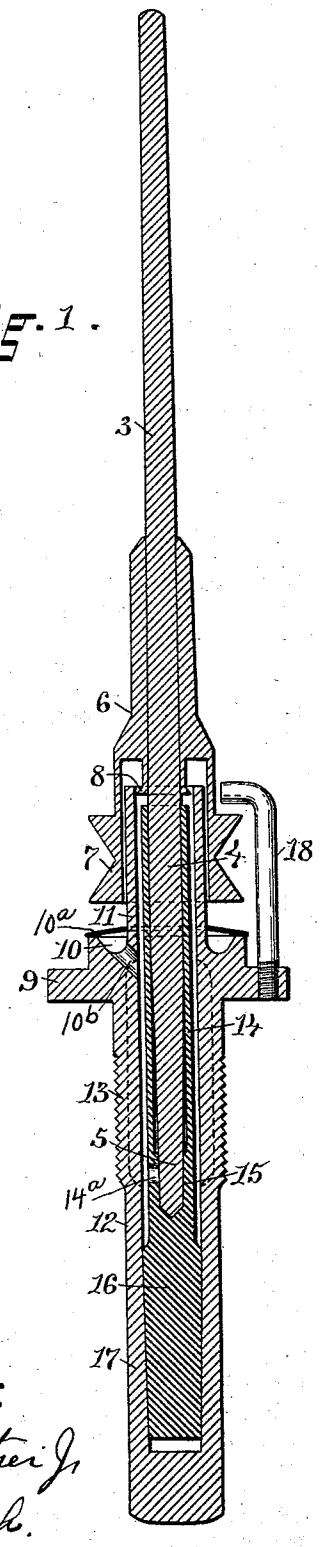

Fig. 2.

WITNESSES:

Chas. H. Luther Jr.

M. F. Bligh.

INVENTOR:

Henry F. Woodmancy

by Joseph A. Miller & Co.

Attys.

UNITED STATES PATENT OFFICE.

HENRY F. WOODMANCY, OF WHITINSVILLE, MASSACHUSETTS.

SPINDLE-SUPPORT FOR SPINNING AND TWISTING MACHINES.

SPECIFICATION forming part of Letters Patent No. 455,525, dated July 7, 1891.

Application filed January 19, 1891. Serial No. 378,247. (No model.)

To all whom it may concern:

Be it known that I, HENRY F. WOODMANCY, of Whitinsville, in the county of Worcester and State of Massachusetts, have invented a new and useful Improvement in Spindle-Supports for Spinning and Twisting Machines; and I hereby declare that the following is a full, clear, and exact description of the same, reference being had to the accompanying drawings, forming part of this specification.

This invention has reference to an improvement in the construction of the bearings and supports of spinning and twisting machine spindles.

The object of the invention is to so construct the step and bolster bearings for the spindle and the spindle in connection with the bolster-case that these bearings shall be thoroughly lubricated.

Another object of the invention is to so construct the spindle and the bearings for the spindle that when the spindle is running at the highest possible speed the lubricating-oil, while circulating freely to lubricate the bearings, will not overflow the bolster-case.

Another object of the invention is to simplify and cheapen the construction of the spindle.

In spinning and twisting machine spindles as heretofore constructed the bolster and step tube, in which the spindle is supported, is constructed to secure a capacity for the spindle and its support to adjust themselves to unequal bobbins or yarn loads by allowing the spindle and the supporting-tube to move laterally as a whole within the supporting-case, or to adjust themselves axially by giving to either the upper or the lower end of the combined bolster and step tube, or both, capacity for lateral motion. The object of such capacity in the spindle to change its vertical axis has been to permit of the use of imperfect bobbins. I find that in practice when imperfect bobbins are used on these spindles imperfect or uneven yarn is produced, particularly when yarn of the finer numbers is spun on ring-frames, and that to produce the best results in spinning yarn on ring-spinning frames the perpendicular axis of the spindle must be in the exact center of the ring during the whole traverse of the ring, and that the bobbins must be at all points exactly concentric with the vertical axis of the spindle. I find that a properly constructed and proportioned spindle can be run at the highest speed yet attained in spinning yarn in a fixed supporting-tube, provided the bearings are abundantly supplied with a continually-changing flow of lubricating-oil, and I have therefore constructed a combined bolster and step tube rigidly secured in the bolster-case, and have so constructed the spindle and its support that the lubricating-oil will circulate freely upward around the spindle and downward around the bolster-tube.

The invention consists in the peculiar and novel construction of the bolster-case, the combined bolster and step tube, and the spindle, and the relation of each to the others, as will be more fully set forth hereinafter.

In the accompanying drawings, Figure 1 is a vertical section through the center of the spindle. Fig. 2 is a side view of the combined bolster and step tube, the bore in which is indicated in broken lines.

In the drawings, the number 3 indicates the blade of the spindle, 4 the journal-bearing of the spindle, and 5 the foot of the spindle.

6 indicates the bobbin-bearing on the spindle, 7 the sleeve-whirl, and 8 the clearer on the spindle.

9 indicates the flange on the bolster-case, which rests on the bolster-rail and forms the base of support for the whole structure.

10 is an oil-cup formed above the flange 9 around the upward-projecting tube 11 of the bolster-case, which tube extends above the clearer 8 on the spindle. The oil-cup is protected by a disk-cover 10^a in the usual manner. The tube 12, closed at the lower end, extends below the flange 9 and is provided with the screw-threads 13, so that when the tube 12 is passed through the hole in the bolster-rail, the flange 9 resting on the top of the bolster-rail, the whole structure is firmly secured by a nut placed on the threaded portion of the tube 12.

The tube 11, oil-cup 10, flange 9, and the tube 12 form the bolster-case. This bolster-case is bored out so as to form a cylindrical space of a diameter larger than the bolster-tube 14, so that an annular space is formed between the bolster-tube and the bolster-case. The bolster-tube 14 is bored out to form the bolster-bearing for the spindle and the step-

bearing 15 for the foot of the spindle. The lower end of the bolster-tube 14 is provided with the conical pin 16, (shown as integral therewith,) and the lower end of the tube 12 of the bolster-case is provided with a conical socket 17, into which the pin 16 is driven, so that the combined bolster and step tube is rigidly and firmly supported in the bolster-case concentric with the interior of the bolster-case, so as to form an annular space between the bolster-case and the bolster-tube. The oil-cup 10 is connected with the interior of the bolster-case by one or more holes or ducts 10^b, and the interior of the bolster and step tube is connected also with the interior of the bolster-case by one or more holes or ducts 14^a.

The combined bolster and step tube, consisting of the bolster-tube 14, the step 15, and pin 16, is made and held in the bolster-case sufficiently rigid to resist the normal strain of the band or belt, which passes around the whirl and by which the spindle is driven, so that the vertical axial position of the spindle and the concentric relation of the spindle and the bobbin to the ring will not be changed and the ring of the ring-spinning frame will be practically concentric with the spindle and bobbin at the higher as well as at all other points of its vertical traverse. The pin 18 is the usual pin used to prevent the spindle being raised in doffing. The bore of the bolster-case is shown of uniform diameter from the top of the tube 11 to the conical socket 17. This bore may be of larger diameter between the oil-cup and the conical socket, as is indicated in broken lines, so as to form a larger oil-chamber.

I find that when a spindle constructed as herein shown and described is run at high speed in a ring-spinning machine the spindle and bobbin not only retain their perfect relation with the ring, but the thumping, jarring, wabbling, and uneasy motion usual in spindles running at high speed is entirely avoided, and that this result is secured without the slightest change of the axis of the spindle or its supporting-bolster.

The lubricating-oil is, when the spindle is running at high speed, forced upward between the spindle and the bolster-tube and follows the spindle until it reaches the clearer 8, surrounding the spindle, where the oil is thrown outward against the interior of the bolster-case, the tube 11 of which extends above the clearer. As previously constructed the upper end of the bolster-case was connected with the lower portion by a groove or grooves formed in the outer side of the bolster-tube, and where the bolster-tube was of less exterior diameter than the interior diameter of the bolster-case, such annular space was filled up and obstructed by packing, springs, or other yielding devices, so that the lubricating-oil could not flow freely downward, and consequently most spindles of these prior constructions throw off considerable oil, and thus keep the spinning-frame and the floor in an unclean, unsightly, and dangerous condition, much objected to by fire underwriters, and also injure the yarn by staining the same with oil containing rust and other impurities difficult to remove in the subsequent processes to which the yarn requires to be subjected. By my construction an unobstructed annular space is secured between the bolster-tube and bolster-case, extending from the top of the bolster-tube to the step of the spindle, and thereby so free a circulation of the lubricating-oil that no oil can be thrown off by the spindle or raised above the bolster-tube. As the whirl 7 extends down over and surrounds the tube 11 of the bolster-case, the strain on the driving-band is at or nearly at the center of the journal-bearing of the spindle, and as this bearing has considerable length the spindle may be made to fit the bearing more loosely, and such a spindle can be run with less strain than when the whirl is placed above or below the bolster bearing of the spindle.

Having thus described my invention, I claim as new and desire to secure by Letters Patent—

1. A spindle-support consisting of a bolster-case extending above and surrounding the bolster and a rigid bolster-tube of less external diameter than the interior of the bolster-case, forming the bolster and step bearing for the spindle and rigidly secured at its lower end in the bolster-case, as described.

2. A sleeve-whirl, a spindle, and a rigid bolster or support therefor below its junction with the whirl, combined with a support for the foot of the spindle, rigidly secured below the foot of the spindle in a bolster-case and forming an annular oil-chamber between the bolster and the bolster-case, as described.

3. The combination, with the sleeve-whirl spindle provided with the clearer 8, of a bolster-case adapted to be secured to the bolster-rail, a rigid combined bolster and step tube rigidly secured in the bolster-case below the foot of the spindle and forming an annular oil-chamber between the bolster-tube and the bolster-case, connected by openings with the interior of the bolster-tube, and the oil-cup, as described.

4. In combination, the sleeve-whirl spindle, the bolster-case having the flange 9, the oil-cup 10, the upward-extending tube 11, the pendent tube 12, closed at its bottom and provided with the tapering socket 17, and the rigid bolster-tube 14, having the step 15 and the tapering pin 16, by which the bolster-tube is rigidly secured in the bolster-case concentric with the interior of the bolster-case, so as to form an annular oil-chamber, as described.

In witness whereof I have hereunto set my hand.

HENRY F. WOODMANCY.

Witnesses:
JOSEPH A. MILLER,
JOSEPH A. MILLER, Jr.