Office de la Propriété Intellectuelle du Canada
Un organisme d'Industrie Canada

Canadian Intellectual Property Office
An agency of Industry Canada

CA 2213757 C 2007/12/04

(11)(21) 2 213 757

(12) BREVET CANADIEN
CANADIAN PATENT

(13) C

(86) Date de dépôt PCT/PCT Filing Date: 1996/02/29
(87) Date publication PCT/PCT Publication Date: 1996/09/12
(45) Date de délivrance/Issue Date: 2007/12/04
(85) Entrée phase nationale/National Entry: 1997/08/25
(86) N° demande PCT/PCT Application No.: SE 1996/000256
(87) N° publication PCT/PCT Publication No.: 1996/027721
(30) Priorité/Priority: 1995/03/07 (SE9500810-8)

(51) Cl.Int./Int.Cl. *E04F 15/04* (2006.01), *B32B 21/06* (2006.01), *B32B 21/08* (2006.01), *E04B 1/61* (2006.01), *E04F 13/08* (2006.01), *E04F 15/00* (2006.01), *E04F 15/02* (2006.01), *E04F 15/14* (2006.01)

(72) Inventeur/Inventor:
MARTENSSON, GORAN, SE

(73) Propriétaire/Owner:
PERGO (EUROPE) AB, SE

(74) Agent: FETHERSTONHAUGH & CO.

(54) Titre : PANNEAU DE SOL OU MURAL ET SON UTILISATION
(54) Title: FLOORING PANEL OR WALL PANEL AND USE THEREOF

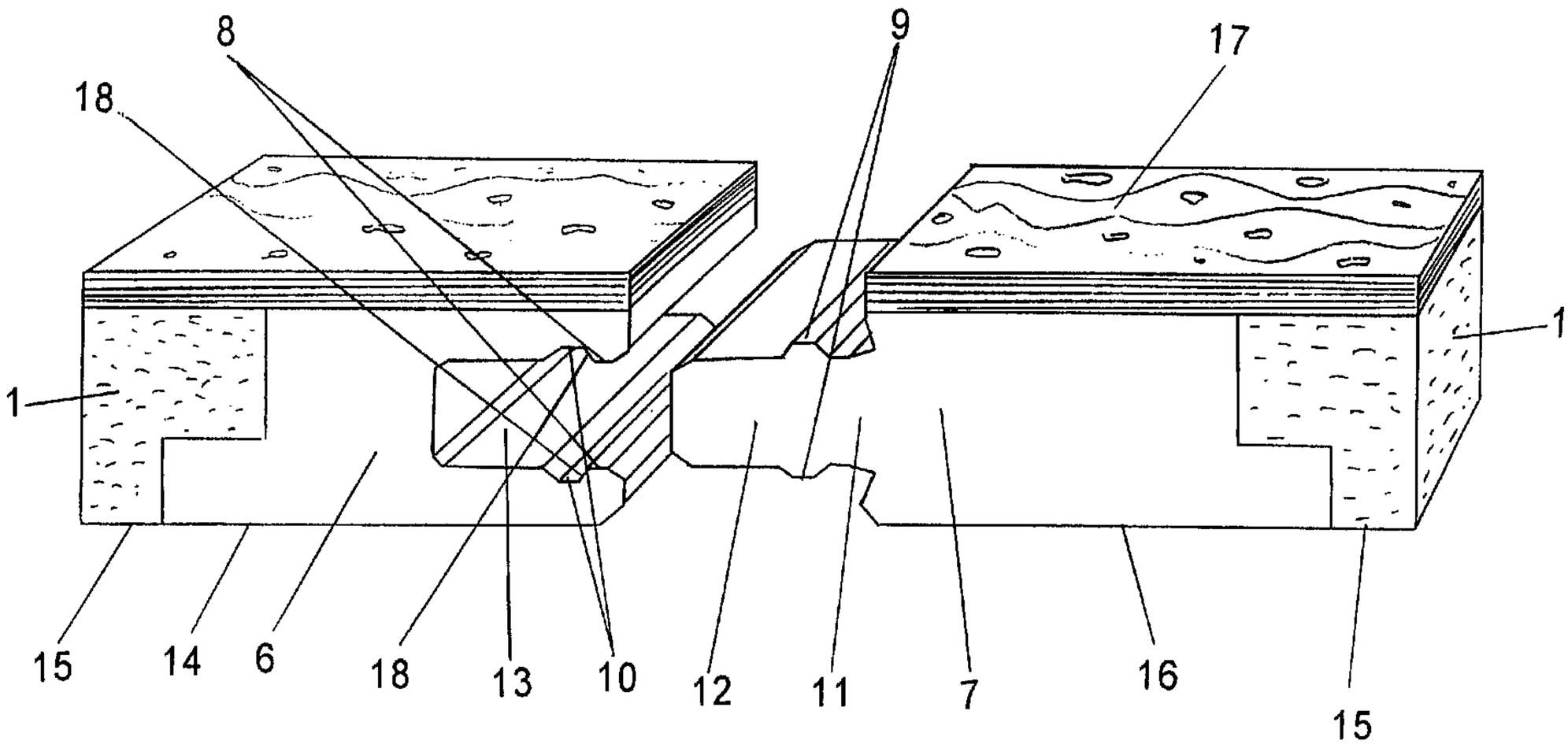

(57) Abrégé/Abstract:
Flooring panel or wall panel and a use thereof in a wet room. The panel is provided with a locking means in the form of groove (6) and tongue (7) forming a tongue/groove joint for assembling of the panels. The groove (6) and the tongue (7) are made of water tight material and formed with a snap-together joint.

24590-47

Abstract

Flooring panel or wall panel and a use thereof in a wet room. The panel is provided with a locking means in the form of groove (6) and tongue (7) forming a tongue/groove joint for assembling of the panels. The groove (6) and the tongue (7) are made of water tight material and formed with a snap-together joint.

FLOORING PANEL OR WALL PANEL AND USE THEREOF

The present invention relates to a flooring panel or wall panel and the use thereof in a wet room.

During the last few years laminated floors have achieved and increased popularity and on many markets they are beginning to replace parquet floors and wall-to-wall carpets. At the production of laminated floors a decorative thermosetting laminate is first produced. This laminate usually consists of a base layer of paper sheets impregnated with phenol-formaldehyde resin and a decorative surface layer consisting of a decor paper sheet impregnated with melamine-formaldehyde resin. The laminate is produced by pressing the different layers at a high pressure and an increased temperature.

The laminate obtained is then glued to a carrier of particle board for instance or used as such without any carrier and it is then called compact laminate. The laminated panel thus produced is then sawn up to a number of floor boards which are provided with groove and tongue at the long sides and the short sides. Often the floor boards produced have a thickness of about 7 mm, a length of 120 cm and a width of about 20 cm. Thereby they can usually be put on top of an existing flooring material at a renovation. According to another alternative, instead one or more of the above decorative sheets can be laminated directly towards a base sheet of particle board for instance.

At the assemblage of such a flooring glue is normally applied in the groove when the floor boards are assembled. Therefore, it will be difficult to change a damaged board or to remove a whole flooring and for instance install it in another room.

To avoid the above problem efforts have been made to achieve floor boards which can be assembled without glue. One such construction is disclosed in the U.S. patent 5,295,341. There the boards are provided with groove and tongue in the usual way, but here a snap-together system is included in the groove-tongue joint.

These floor boards can be assembled without glue. However, they have the disadvantage that the joints between the boards will be flexible and not rigid. This means that if the surface below the floor boards is not completely even which is usually the case, a gap will be formed between the boards.In these gaps dirt and water can penetrate.

According to the present invention also the last mentioned problem has been solved and a flooring panel or wall panel, preferably of thermosetting laminate having two pairs of parallel side edges has been brought about. Two of these side edges

are provided with a locking means in the form of a groove and the other two with a tongue fitting in the groove whereby a tongue/groove joint for assembling of the panels is formed. The groove and the tongue are made of a water tight material and formed with a snap-together joint including one or more snapping webs or the like with corresponding cooperating snapping grooves. The groove in front of the snap-together joint has an entrance opening and continues inside the snap-together joint in a stabilizing groove. The tongue is formed with a rear neck intended to fit in the entrance opening and a forwardly protruding stabilizing part situated in front of the snap-together joint and intended for a tight fit in the stabilizing groove, whereby connecting panels when assembled by the snap-together joints and the stabilizing parts in the stabilizing grooves are fixed to each other and prevented from unintentional separation while at the same time a rigid floor covering or wall covering respectively with water tight joints and without unintentional gaps between the panels is obtained.

According to one preferred embodiment two adjacent side edges of the panel are provided with a groove and the other two side edges with a tongue. At this embodiment the panel is usually rectangular, but it can also be square.

At square panels it is also possible to provide a pair of parallel sides with a groove and the other pair with a tongue. However, the choice of pattern on the surface layer of the panel is limited at this shape.

It is preferred that the groove and the tongue are made of thermoplast, a thermosetting laminate, aluminum or a chipboard or particle board impregnated with a thermoplast. Of course also other water tight materials can be used.

At one embodiment, the groove as well as the tongue are formed as a ledge fixed to the side edges of the panel. Suitably the ledge-formed groove and tongue respectively are then fixed in a recess along the side edges with glue for instance.

The snapping webs can be formed on the upper and/or lower side of the tongue while fitting snapping grooves are formed in the groove.

In one preferred embodiment one snapping web is formed on the upper side of the tongue and one on the lower side thereof while the groove has two fitting snapping grooves one at the top and one at the bottom.

If necessary one pair of snapping webs can be formed on the upper side of the tongue and one pair on the lower side thereof. Of course you then need two snapping grooves at the top and two snapping grooves at the bottom of the groove to fit with the snapping webs.This construction will give an extremely strong joint.

Of course the snapping webs can instead be arranged in the groove and the snapping grooves on the tongue.

In one preferred embodiment the width of the stabilizing part is 2-10 mm, preferably 4-10 mm. Generally a wider stabilizing part with fitting stabilizing groove gives a better rigidity of the assembled panels.

The stabilizing part will also assist in a correct assemblage of the panels. Thus, when the stabilizing part moves into the stabilizing groove you get a correct level of the panels and the panels can easily be pushed into the correct position where you do not have any gap between the panels. Of course without any substantial gap between the panels water and dirt are prevented from entering the assembled flooring or wall covering.

As a safe guard against water penetration a seal might be arranged in the inner part of the stabilizing groove for instance.

Preferably the grooves and the tongues run the full length of the side edges of the panels.

The panels can be designed in such a manner that the under side of the groove and the tongue are situated in the same level as the under side of the panel.

The panels can be used for covering floors and walls in ordinary dry rooms. However, due to the rigid and water tight joints the panels can be used also for wet rooms. For such applications the whole panel is preferably made of thermosetting laminate of so-called compact laminate type. Such a laminate does not absorb water.

Another alternative is a non water absorbing base with a water tight surface. The surface may for instance consist of paint, a thermoplastic foil such as polyethylene, polypropylene or polyvinyl chloride, a paper sheet impregnated with thermosetting resin or of a thermosetting laminate.

One suitable non water absorbing base is a board produced by pressing wood particles or wood chips impregnated with a thermoplastic.

Another aspect of the invention provides a glueless laminated flooring system comprising a plurality of similar flooring panels to be assembled without glue, each of said panels comprising a surface of a thermosetting laminate as a paper sheet impregnated with thermosetting resin; said surface being bonded to a carrier; each of said panels comprising two sets of parallel side edges; each of said side edges configured to receive a tongue or a groove; said tongue and said groove being formed of at least one material selected from the group consisting of chipboard and particle board, and said tongue or said groove further comprising at least one snapping web positioned thereon, and, the other of said tongue or said groove further comprising at least one snapping groove shaped so as to receive the at least one snapping web; and said tongue and said groove of each of said panels being shaped so as to form a tight floor joint when snapped together with a similar panel.

A further aspect of the invention provides a method of assembling a glueless laminated flooring having a tight joint between abutting floor panels, said method comprising joining a plurality of similar flooring panels, each of said panels comprising a surface of a thermosetting laminate or a paper sheet impregnated with thermosetting resin; said surface being bonded to a carrier; said panels comprising two sets of parallel side edges; two of said side edges comprising a groove and two of said side edges comprising a tongue; said tongue and said groove being formed of at least one material selected from the group consisting of chipboard and particle board and said tongue or said groove further comprising at least one snapping web positioned thereon, and, the other of said tongue or said groove further comprising at least one snapping groove

shaped so as to receive the at least one snapping web; and being shaped so as to form a tight floor joint when snapped together.

A further aspect of the invention provides a flooring panel for use in assembling a glueless floor, said flooring panel comprising a surface of a thermosetting laminate or a paper impregnated with a thermosetting resin said surface being bonded to a carrier of wood particles impregnated with a plastic; said panel comprising two sets of parallel side edges; two of said side edges comprising a groove and two of said side edges comprising a tongue; at least said tongue being formed of as a material selected from the group consisting of a chipboard and a particle board, and said tongue or said groove further comprising at least one snapping web positioned thereon, and, the other of said tongue or said groove further comprising at least one snapping groove shaped so as to receive the at least one snapping web; and the tongue and groove being cooperatively shaped so as to form a tight floor joint in the absence of glue when snapped together with a similar panel.

A further aspect of the invention provides a glueless panel system comprising a plurality of similar panels to be assembled without glue, each of said panels comprising a surface layer selected from the group consisting of paint, a thermoplastic foil, a paper impregnated with thermosetting resin and a thermosetting laminate; each of said panels comprising two sets of parallel side edges, two of said side edges comprising a groove and two of said side edges comprising a tongue; said tongue being a unitary, monolithic structure formed of bonded wood particles having a length extending substantially the length of said panel, and at least one snapping web formed thereon, and said groove of each of said

panels having snapping grooves therein, and being shaped so as to receive said tongue and the at least one snapping web, thereby forming a water tight joint when snapped together with a similar panel, said joint substantially preventing moisture from passing through a joint formed between assembled similar panels.

A further aspect of the invention provides a panel for use with other similar panels to be assembled by snapping one panel to another similar panel in the absence of glue; said panel having a surface layer selected from the group consisting of paint, a thermoplastic foil, a paper impregnated with thermosetting resin, and a thermosetting laminate; said panel comprising two sets of parallel side edges; two of said side edges comprising a groove and two of said side edges comprising a tongue; said tongue being a unitary, monolithic structure formed of bonded wood particles having a rear neck configured to tightly fit within an entrance opening of a respective groove, and a forwardly-protruding stabilizing part separated from the neck by at least one snapping web positioned on the tongue, the stabilizing part and the neck being substantially parallel to an upper surface of the panel; and said groove being shaped with at least one snapping groove, each configured and positioned so as to receive a respective snapping web, and to thereby form a tight joint when snapped together with a similar panel.

A further aspect of the invention provides a method of assembling a glueless panel system having a tight joint between abutting panels, said method comprising the steps of providing a plurality of similar panels, each of said panels comprising a surface layer selected from the group consisting of paint, a thermoplastic foil, a paper impregnated with thermosetting resin and a thermosetting

laminate; configuring said panels with two sets of parallel side edges; configuring one of a groove and a tongue on each said edge; selecting each of the tongue and groove to comprise bonded wood particles; forming the tongue to have a neck portion configured to extend from a respective edge, and a stabilizing part distal the edge, each of the neck and the stabilizing part having walls extending substantially orthogonal to the respective edge; positioning at least one snapping web between the neck and the stabilizing part; forming at least one snapping groove within the groove; shaping each of the said tongue and groove so as to form a tight joint; joining the panels together by snapping the tongue into the groove.

A further aspect of the invention provides a panel with two pairs of parallel side edges, the panel comprising: one pair of side edges having a locking means that includes a groove having a lower groove definition and an upper groove definition, and the other pair of side edges having a tongue configured to fit into the groove, thereby forming a tongue and groove joint for joining the panel with other similar panels; and, at least one snap action projection configured on at least one of an upper side or bottom side of the tongue, and at least one snap action groove are formed within the groove, such that the snap action projections and the snap action grooves are cooperatively configured to snugly engage one another when the panels are in an installed position; wherein, the panels, when in the installed position, are joined together by the snap action joint, and are secured to one another and prevented from becoming separated from one another, while simultaneously maintaining a fixed covering without undesired space between adjacent panels; and wherein the bottom side of the tongue has a snap-action rib; and wherein, the lower groove

definition has a snap action groove formed to receive the snap-action rib; and wherein, the lower groove definition is longer than the upper groove definition, such that the lower groove definition protrudes over the upper groove definition at a corresponding side edge of the panel.

A further aspect of the invention provides a method of forming a tight joint between similar panels, said method comprising: providing a series of panels, said panel defining a perimeter; providing a tongue or a groove along said perimeter; defining at least one protrusion on said tongue or said groove, the at least one protrusion thereby forming a snapping web; defining at least one depression on said tongue or said groove, the at least one depression being positioned and configured so as to act as a snapping groove to receive said snapping web; and urging the panels together to form a tight joint, wherein the snapping web and snapping groove hold the panels together.

A further aspect of the invention provides a system for forming a wall, floor or cladding by assembling a plurality of panels into an interlocked unit, said system comprising: a plurality of panels, each of said panels defining a perimeter comprising side edges, each of said side edges being provided with a tongue or a groove; said panel having an upper surface formed of one of paint, a thermoplastic foil, a paper impregnated with a thermosetting or UV-curing resin, and a thermosetting laminate; said tongue or said groove being provided with a protrusion, thereby forming a snapping web; a complementary depression in the groove or the tongue respectively cooperating with said protrusion to form a snapping groove; wherein, said snapping web and snapping groove forcing adjacent panels together when said panels are snapped together, thereby forming a tight joint.

A further aspect of the invention provides a building panel having a perimeter defining sides of said panel, each of said sides being provided with a tongue or a groove, said panel comprising: an upper surface formed of one of a paint, a thermoplastic foil, a paper impregnated with a thermosetting or UV curing resin, and a thermosetting laminate; said tongue or said groove having at least one protrusion, thereby forming a snapping web; at least one of complementary depression in the groove or the tongue respectively, each configured to cooperate with a respective protrusion, each depression forming a respective snapping groove, wherein said snapping webs and snapping grooves forcing adjacent panels toward their joint when said panels are snapped together, thereby forming a tight joint.

The invention will be further explained in connection with the enclosed figures of which figure 1 schematically shows a panel 1 according to the invention seen from above. The panel is drawn with a rectangular shape but is can as well be square. Figures 2 and 3 show a cross section through two adjacent edges of two embodiments of a panel where two such panels are to be assembled. The construction according to figure 2 is preferred.

The panel 1 consists of a base of wood particles impregnated with a thermoplastic with a decorative thermosetting laminate as a surface layer 17 glued on top.

The panel 1 has two pairs of parallel side edges 2, 3 and 4, 5 respectively (Fig. 1). Two of these side edges are provided with locking means in the form of a groove 6 and the other two with a tongue 7 fitting in the groove 6, whereby a tongue/groove joint for assembling of the panels is formed.

The groove 6 and the tongue 7 are made of a water tight material and formed with a snap-together joint. In the embodiment shown in figure 2 the snap-together joint consists of two snapping webs 9, one on the upper side of the tongue 7 and one on the lower side of tongue, these webs 9 cooperating with two fitting snapping grooves 10.

In front of the snap-together joint, which means the snapping webs 9 and the snapping groove 10, the groove 6 has an entrence opening 8. Inside the snap-together joint the groove 6 continues in a stabilizing groove 13.

The tongue 7 is formed with a rear neck 11 intended to fit in the entrance opening 8 of the groove 6. In front of the snap-together joint the tongue 7 has a forwardly protruding stabilizing part 12 intended for a tight fit in the stabilizing groove 13.

The parts 9 and 10 included in the snap-together joint are also adapted to each other to give a tight fit and strong joint. To increase this effect further the snapping grooves 10 are provided with undercut edges 18 which cooperate with the backside of the snapping webs 9 with the same undercut.

The groove 6 and the tongue 7 are made of thermosetting laminate and formed as a ledge fixed by glue in a recess along the side edges of the panel. The under side 14 of the groove 6 is situated in the same level as the under side 15 of the panel and the under side 16 of the tongue 7 is situated in the same level as the under side 15 of the panel 1.

When connecting panels have been assembled by the snap-together joints and the stabilizing parts12 inserted in the stabilizing grooves 13, the panels are fixed to each other and prevented from unintentional separation. A rigid floor covering or wall covering with water tight joints and without unintentional gaps between the panels is obtained. The usual rotation of the snapping webs 9 in the snapping grooves 10 is prevented by the stabilizing parts 12 in the stabilizing grooves 13. Accordingly these parts are essential for the possibility to get a rigid joint between the panels.

The embodiment shown in figure 3 is very similar to that according to figure 2. The difference is that only the under side of the tongue 7 is provided with a snapping web 9. The upper side is lacking a snapping web. Accordingly there is only one snapping groove 10 at the bottom of the groove 6.

The invention is not limited to the embodiments shown since these can be modified in different ways within the scope of the invention.

CLAIMS:

1. A glueless laminated flooring system comprising

a plurality of similar flooring panels to be assembled without glue, each of said panels comprising a surface of a thermosetting laminate as a paper sheet impregnated with thermosetting resin;

said surface being bonded to a carrier;

each of said panels comprising two sets of parallel side edges;

each of said side edges configured to receive a tongue or a groove;

said tongue and said groove being formed of at least one material selected from the group consisting of chipboard and particle board, and said tongue or said groove further comprising at least one snapping web positioned thereon, and, the other of said tongue or said groove further comprising at least one snapping groove shaped so as to receive the at least one snapping web; and

said tongue and said groove of each of said panels being shaped so as to form a tight floor joint when snapped together with a similar panel.

2. The glueless laminated flooring system of claim 1, wherein said thermosetting laminate comprises a base layer of paper sheets impregnated with a thermosetting resin and a decorative surface layer.

3. The glueless laminated flooring system of claim 2, wherein the thermosetting resin is at least one of phenol-formaldehyde resin and melamine-formaldehyde resin.

4. The glueless laminated flooring system of claim 1, wherein said tongue and said groove of each of said panels comprises undercut surfaces which taper from vertical in a direction so as to force the panels toward the joint between said panels to form said tight joint.

5. The glueless laminated flooring system of claim 1, wherein said tongue further comprises at least two snapping webs.

6. The glueless laminated flooring system of claim 5, wherein said tongue comprises two snapping webs.

7. The glueless laminated flooring system of claim 6, wherein said tongue has at least two faces and at least one respective snapping web is positioned on each respective face of said tongue.

8. The glueless laminated flooring system of claim 1, wherein said groove further comprises at least one snapping groove.

9. The glueless laminated flooring system of claim 8, wherein said groove comprises two snapping grooves.

10. The glueless laminated flooring system of claim 1, wherein panels are rectangular in shape.

11. The glueless flooring system of claim 1, wherein rotation of assembled panels about said joint between assembled panels is prevented by the penetration of a stabilizing portion of said tongue into a stabilizing groove, each of said stabilizing portion of said tongue and said stabilizing groove having opposed, parallel surfaces.

12. The glueless flooring system of claim 1, wherein said joint between adjacent panels is rigid.

13. The glueless flooring system of claim 1, wherein said snapped together panels comprise a thermosetting laminate and form a water tight joint.

14. The glueless laminated flooring system of claim 1, wherein at least said side edge of the panel defining said groove is made of a material selected from the group consisting of chipboard and particle board, each impregnated with a resin.

15. The glueless laminated flooring system of claim 1, wherein at least said side edge of the panel defining said tongue is made of a material selected from the group consisting of chipboard and particle board, each impregnated with a resin.

16. The glueless laminated flooring system of claim 1, further comprising a base formed of pressed wood material selected from the group consisting of wood particles and wood chips, each impregnated with a resin.

17. The glueless laminated flooring system of claim 14, wherein said panel comprises a base formed of pressed wood material selected from the group consisting of wood particles and wood chips, each impregnated with a resin.

18. The glueless laminated flooring system of claim 15, wherein said panel comprises a base formed of pressed wood material selected from the group consisting of wood particles and wood chips, each impregnated with a resin.

19. A method of assembling a glueless laminated flooring having a tight joint between abutting floor panels, said method comprising

joining a plurality of similar flooring panels, each of said panels comprising a surface of a thermosetting laminate or a paper sheet impregnated with thermosetting resin; said surface being bonded to a carrier; said panels comprising two sets of parallel side edges; two of said side edges comprising a groove and two of said side edges comprising a tongue; said tongue and said groove being formed of at least one material selected from the group consisting of chipboard and particle board and said tongue or said groove further comprising at least one snapping web positioned thereon, and, the other of said tongue or said groove further comprising at least one snapping groove shaped so as to receive the at least one snapping web; and being shaped so as to form a tight floor joint when snapped together.

20. The method of claim 19, wherein said panels are assembled by pushing two similar panels towards one another and snapping the panels together.

21. A flooring panel for use in assembling a glueless floor, said flooring panel comprising

a surface of a thermosetting laminate or a paper impregnated with a thermosetting resin said surface being bonded to a carrier of wood particles impregnated with a plastic;

said panel comprising two sets of parallel side edges;

two of said side edges comprising a groove and two of said side edges comprising a tongue;

at least said tongue being formed of as a material selected from the group consisting of a chipboard and a

particle board, and said tongue or said groove further comprising at least one snapping web positioned thereon, and, the other of said tongue or said groove further comprising at least one snapping groove shaped so as to receive the at least one snapping web; and

the tongue and groove being cooperatively shaped so as to form a tight floor joint in the absence of glue when snapped together with a similar panel.

22. The flooring panel of claim 21, wherein said tongue comprises at least one snapping groove having a surface which is undercut so as to cooperate with a similar undercut on a backside of a snapping web positioned in said groove when the flooring panel is assembled with another, similar, flooring panel.

23. The flooring panel of claim 21, wherein at least said tongue is made of a material selected from the group consisting of chipboard and particle board, each impregnated with a resin.

24. The flooring panel of claim 21, wherein said bonded wood particles is made of a material comprising particle board impregnated with a resin.

25. The flooring panel of claim 21, further comprising a base formed of at least one of wood particles and wood chips, each impregnated with a resin.

26. The flooring panel of claim 23, further comprising a base formed of at least one of wood particles and wood chips, each impregnated with a resin.

27. The flooring panel of claim 24, further comprising a base formed of wood particles impregnated with a resin.

28. The flooring panel of claim 22, wherein said undercut on said at least one snapping groove defines a tapering surface which cooperates with said undercut on said snapping web.

29. A glueless panel system comprising

a plurality of similar panels to be assembled without glue, each of said panels comprising

a surface layer selected from the group consisting of

paint,

a thermoplastic foil,

a paper impregnated with thermosetting resin and

a thermosetting laminate;

each of said panels comprising two sets of parallel side edges,

two of said side edges comprising a groove and two of said side edges comprising a tongue;

said tongue being a unitary, monolithic structure formed of bonded wood particles having a length extending substantially the length of said panel, and at least one snapping web formed thereon,

and said groove of each of said panels having snapping grooves therein, and being shaped so as to receive said tongue and the at least one snapping web, thereby forming a water tight joint when snapped together with a similar panel, said joint substantially preventing moisture

from passing through a joint formed between assembled similar panels.

30. The panel system of claim 29 wherein said tongue comprises two snapping webs.

31. The panel system of claim 29 wherein the panels are flooring panels.

32. A panel for use with other similar panels to be assembled by snapping one panel to another similar panel in the absence of glue; said panel having

a surface layer selected from the group consisting of

paint,

a thermoplastic foil,

a paper impregnated with thermosetting resin, and

a thermosetting laminate;

said panel comprising two sets of parallel side edges; two of said side edges comprising a groove and two of said side edges comprising a tongue;

said tongue being a unitary, monolithic structure formed of bonded wood particles having a rear neck configured to tightly fit within an entrance opening of a respective groove, and a forwardly-protruding stabilizing part separated from the neck by at least one snapping web positioned on the tongue, the stabilizing part and the neck being substantially parallel to an upper surface of the panel; and

said groove being shaped with at least one snapping groove, each configured and positioned so as to receive a respective snapping web, and to thereby form a tight joint when snapped together with a similar panel.

33. The panel of claim 32 wherein said tongue comprises two snapping webs.

34. The panel of claim 32 wherein the panel is a flooring panel.

35. A method of assembling a glueless panel system having

a tight joint between abutting panels, said method comprising the steps of

providing a plurality of similar panels,

each of said panels comprising a surface layer selected from the group consisting of paint, a thermoplastic foil, a paper impregnated with thermosetting resin and a thermosetting laminate;

configuring said panels with two sets of parallel side edges;

configuring one of a groove and a tongue on each said edge;

selecting each of the tongue and groove to comprise bonded wood particles;

forming the tongue to have a neck portion configured to extend from a respective edge, and a stabilizing part distal the edge, each of the neck and the stabilizing part having walls extending substantially orthogonal to the respective edge;

positioning at least one snapping web between the neck and the stabilizing part;

forming at least one snapping groove within the groove;

shaping each of the said tongue and groove so as to form a tight joint;

joining the panels together by snapping the tongue into the groove.

36. The method of claim 35 wherein said tongue comprises two snapping webs.

37. The method of claim 35 wherein the panels are flooring panels.

38. A panel with two pairs of parallel side edges, the panel comprising:

one pair of side edges having a locking means that includes a groove having a lower groove definition and an upper groove definition, and

the other pair of side edges having a tongue configured to fit into the groove, thereby forming a tongue and groove joint for joining the panel with other similar panels; and,

at least one snap action projection configured on at least one of an upper side or bottom side of the tongue, and at least one snap action groove are formed within the groove, such that the snap action projections and the snap action grooves are cooperatively configured to snugly engage one another when the panels are in an installed position; wherein,

the panels, when in the installed position, are joined together by the snap action joint, and are secured to one another and prevented from becoming separated from one another, while simultaneously maintaining a fixed covering without undesired space between adjacent panels; and wherein the bottom side of the tongue has a snap-action rib; and wherein,

the lower groove definition has a snap action groove formed to receive the snap-action rib; and wherein,

the lower groove definition is longer than the upper groove definition, such that the lower groove definition protrudes over the upper groove definition at a corresponding side edge of the panel.

39. The panel as in claim 38, wherein the panel is one of a flooring panel and a wall panel.

40. The panel as in claim 38, further comprising

a water-resistant base including grooves and tongues, includes a board which is formed of compressed wood parts or wood chips; and,

a water-resistant surface layer including at least one of a paint, thermoplastic sheeting, a layer of paper impregnated with cured resin, and a cured laminate.

41. The panel as in claim 40, wherein the snap-action groove is positioned in the lower groove definition so as to be fully situated in the groove portion within the upper groove definition.

42. The panel as set forth in claim 40, wherein the at least one snap action projection faces the lower groove

definition, and, the snap-action groove formed to receive said snap-action projection bears an inclined edge surface.

43. The panel as set forth in claim 42, wherein the inclined edge surface is an outer contact surface facing the side edge of the panel.

44. The panel as set forth in claim 38, wherein the lower side of the tongue is substantially coplanar with a lower side of the panel.

45. A method of forming a tight joint between similar panels, said method comprising:

providing a series of panels, said panel defining a perimeter;

providing a tongue or a groove along said perimeter;

defining at least one protrusion on said tongue or said groove, the at least one protrusion thereby forming a snapping web;

defining at least one depression on said tongue or said groove, the at least one depression being positioned and configured so as to act as a snapping groove to receive said snapping web; and

urging the panels together to form a tight joint, wherein the snapping web and snapping groove hold the panels together.

46. The method of claim 45, wherein the panels are quadrilateral and two sides have tongues and two sides have grooves and the panels are assembled by snapping the tongues into said grooves.

47. The method of claim 45, wherein said protrusions are on said tongue and the panels are assembled by snapping said protrusions into depressions in said groove.

48. The method of claim 45, wherein said panels may be disassembled by rotating at least one of said panels about said joint to dismount said panels.

49. The method of claim 47, wherein there are an uneven number of protrusions on said tongue.

50. The method of claim 49, further comprising providing an uneven number of depressions in said groove so as to cooperate with each of said protrusions.

51. A system for forming a wall, floor or cladding by assembling a plurality of panels into an interlocked unit, said system comprising:

a plurality of panels, each of said panels defining a perimeter comprising side edges, each of said side edges being provided with a tongue or a groove;

said panel having an upper surface formed of one of paint, a thermoplastic foil, a paper impregnated with a thermosetting or UV-curing resin, and a thermosetting laminate;

said tongue or said groove being provided with a protrusion, thereby forming a snapping web; a complementary depression in the groove or the tongue respectively cooperating with said protrusion to form a snapping groove; wherein,

said snapping web and snapping groove forcing adjacent panels together when said panels are snapped together, thereby forming a tight joint.

52. The system of claim 51, wherein at least one of the panels comprises a forwardly protruding stabilizing part extending outwardly along an upper surface of the perimeter.

53. The system of claim 51, wherein the panels are quadrilateral.

54. The system of claim 51, wherein joints formed in said interlocked unit are water resistant.

55. The system of claim 51, wherein the panels are formed of an upper surface adhered to a base layer and the base layer is treated so as to increase its water resistance properties.

56. The system of claim 51, wherein the panel comprises a base layer formed of a compressed cellulosic impregnated or coated with one of a wax, an oil, and a resin.

57. A building panel having a perimeter defining sides of said panel, each of said sides being provided with a tongue or a groove, said panel comprising:

an upper surface formed of one of a paint, a thermoplastic foil, a paper impregnated with a thermosetting or UV curing resin, and a thermosetting laminate;

said tongue or said groove having at least one protrusion, thereby forming a snapping web;

at least one of complementary depression in the groove or the tongue respectively, each configured to cooperate with a respective protrusion, each depression forming a respective snapping groove, wherein

said snapping webs and snapping grooves forcing adjacent panels toward their joint when said panels are snapped together, thereby forming a tight joint.

58. The building panel of claim 57, wherein said panel is a quadrilateral.

59. The building panel of claim 58, wherein said panel further comprising additional protrusions.

60. The building panel of claim 58, wherein said panel comprising an even number of protrusions which are diametrically opposed.

61. The building panel of claim 59, wherein none of said protrusions are diametrically opposed.

62. The building panel of claim 59, wherein there are at least three protrusions, two of which are diametrically opposed.

63. The building panel of claim 58, wherein there are an even number of protrusions, which are longitudinally displaced from each other.

64. The building panel of claim 59, wherein the tongue on which the protrusions are located has a truncated lower surface.

FETHERSTONHAUGH & CO.
OTTAWA, CANADA

PATENT AGENTS

Fig. 1

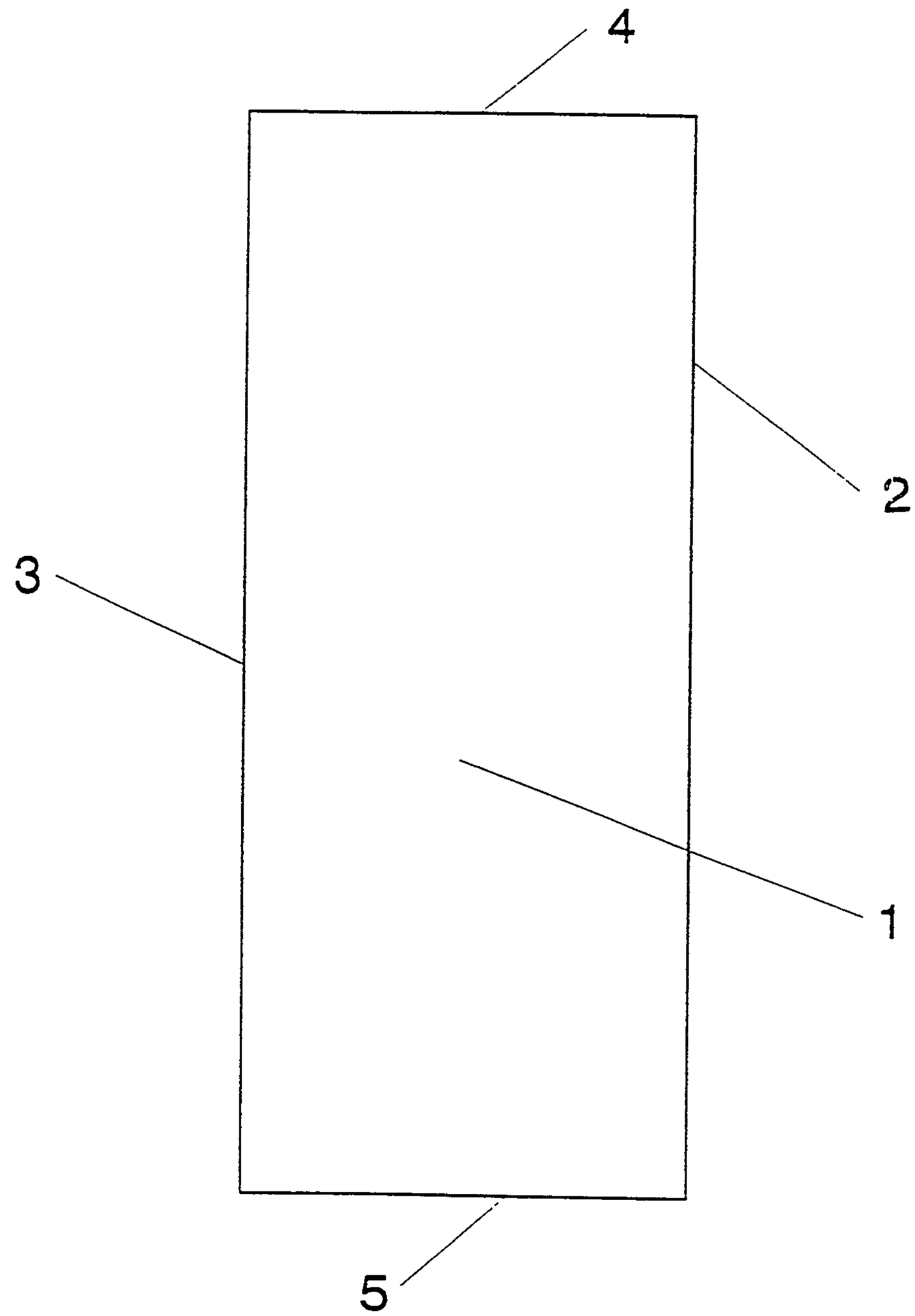

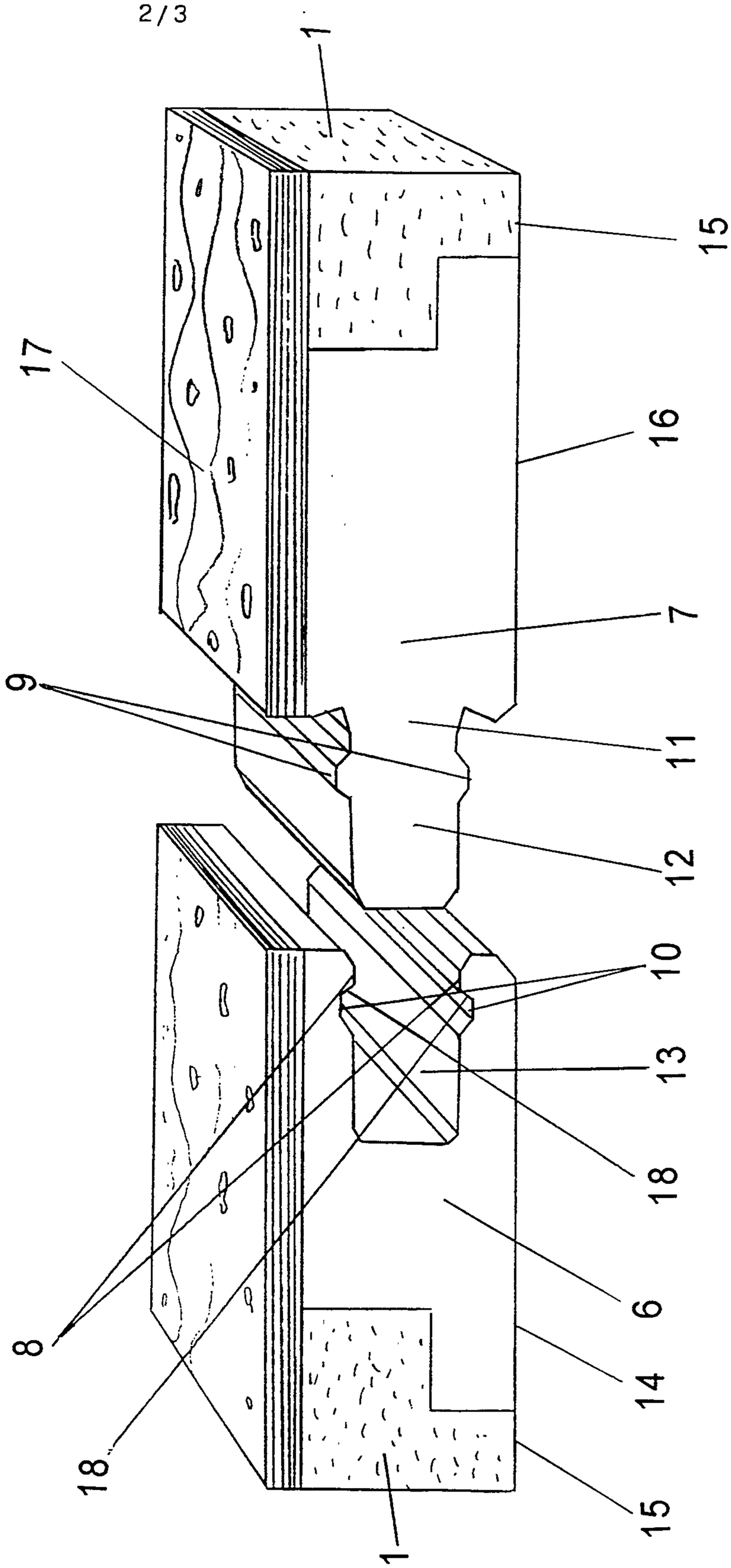

Fig. 2

Fig. 3

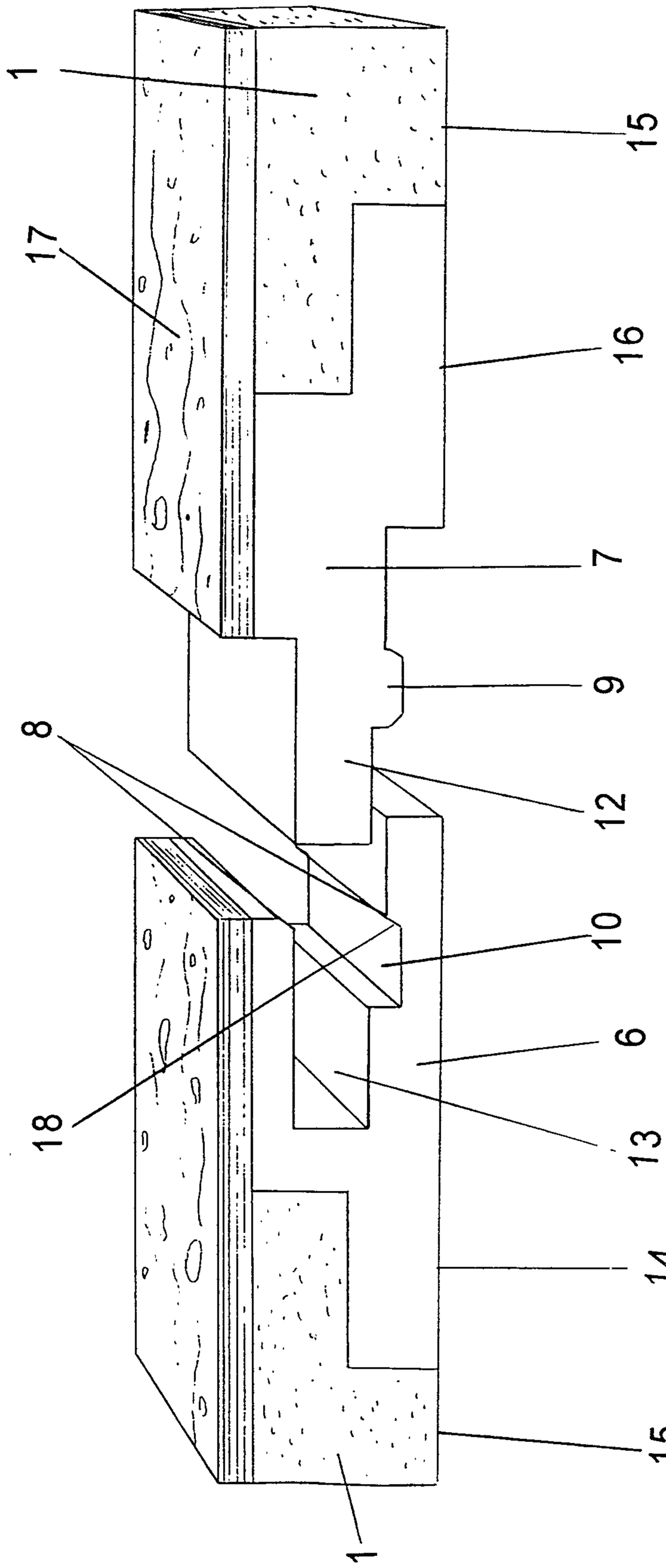

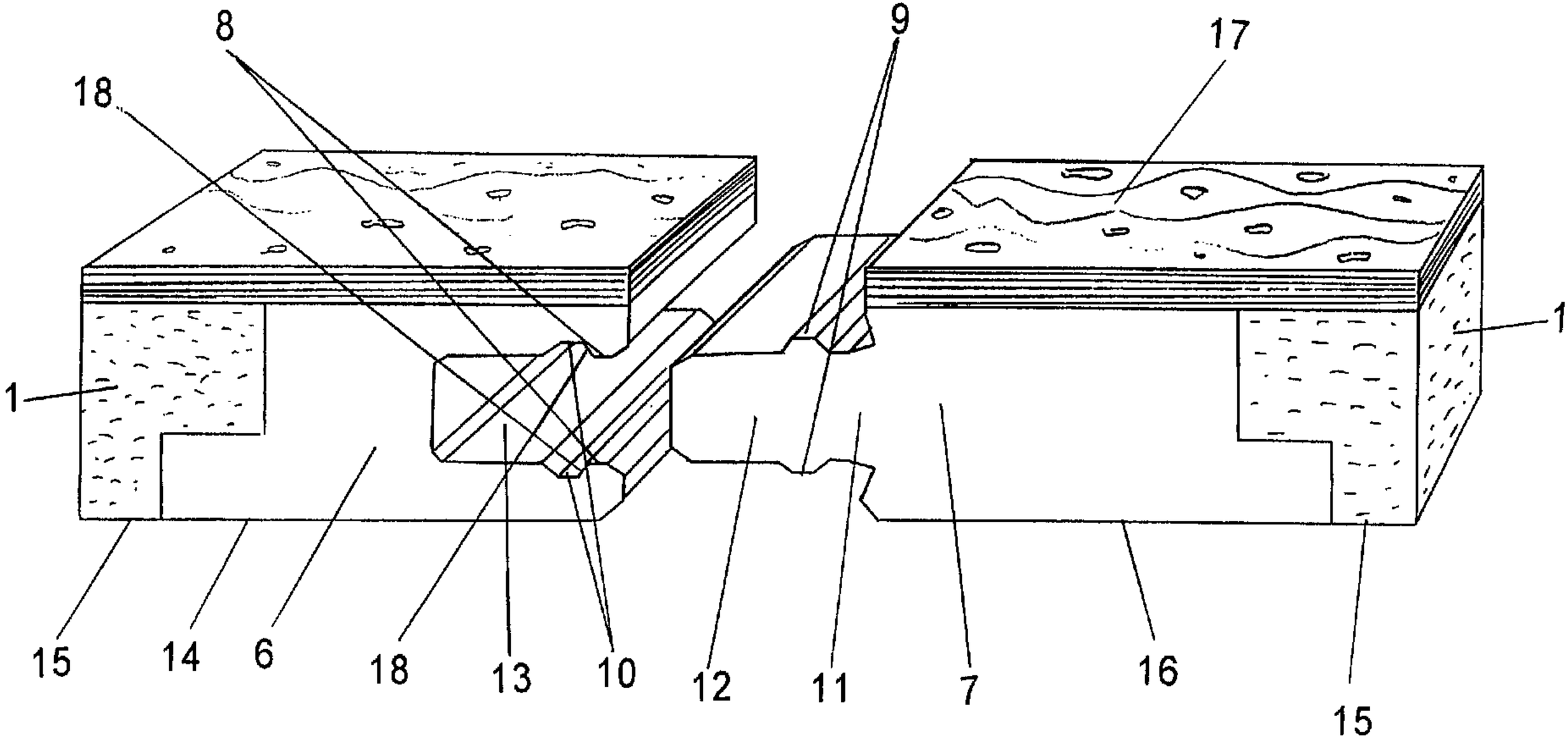
8
18
9
17
1
1
15
14
6
18
13
10
12
11
7
16
15