OPIC
Office de la propriété intellectuelle du Canada

CIPO
Canadian Intellectual Property Office

(12) (19) (CA) **Demande-Application**

(21) (A1) **2,313,963**
(22) 2000/07/17
(43) 2001/01/30

(72) KESHAVARAJ, RAMESH, US
(71) MILLIKEN & COMPANY, US

(51) Int.Cl.[7] B60R 21/16
(30) 1999/07/30 (09/364,130) US

(54) **SAC GONFLABLE COMPORTANT PEU DE TISSU MAIS OFFRANT TOUT DE MEME UN GRAND VOLUME DE GONFLAGE**

(54) **AIRBAG CUSHION EXHIBITING LOW FABRIC USAGE AND SIMULTANEOUSLY HIGH AVAILABLE INFLATION AIRSPACE VOLUME**

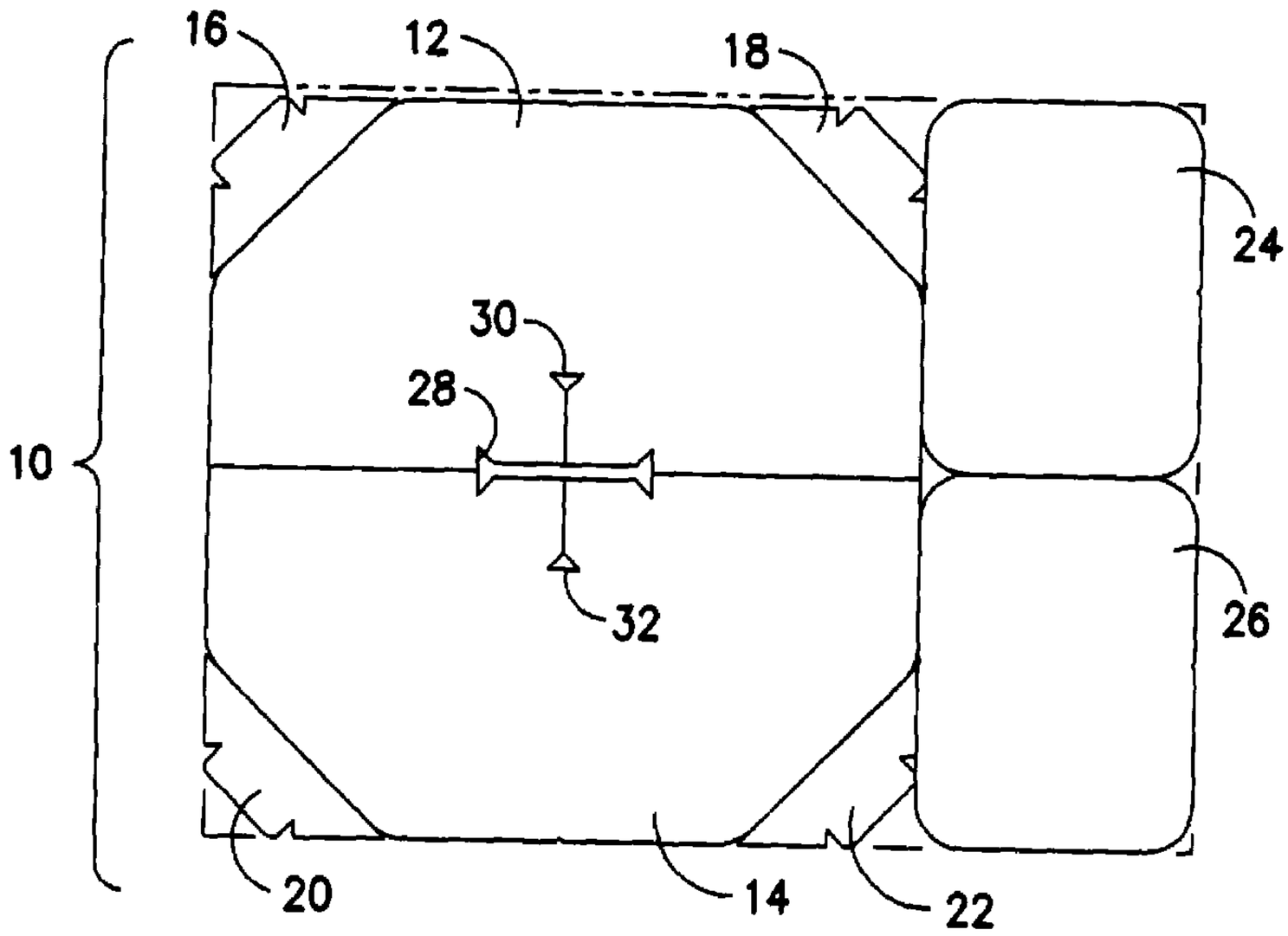

(57) The present invention relates to an airbag cushion which simultaneously exhibits a very low amount of fabric utilized to produce the target airbag cushion in correlation to an overall high amount of available inflation airspace within the cushion itself. These two correlative elements are now combined for the first time in what is defined as an effective fabric usage index (being the quotient of the amount of fabric utilized in the construciton of the airbag cushion and the available inflation airspace volume). The inventive airbag cushion must possess an effective fabric usage factor of at most 0.0330. A cushion exhibiting such low seam usage and fabric usage factors and also comprising an integrated looped pocket for the disposition of an inflator can is also provided as well as an overall vehicle restraint system comprising the inventive airbag cushion.

Abstract

The present invention relates to an airbag cushion which simultaneously exhibits a very low amount of fabric utilized to produce the target airbag cushion in correlation to an overall high amount of available inflation airspace within the cushion itself. These two correlative elements are now combined for the first time in what is defined as an effective fabric usage index (being the quotient of the amount of fabric utilized in the construciton of the airbag cushion and the available inflation airspace volume). The inventive airbag cushion must possess an effective fabric usage factor of at most 0.0330. A cushion exhibiting such low seam usage and fabric usage factors and also comprising an integrated looped pocket for the disposition of an inflator can is also provided as well as an overall vehicle restraint system comprising the inventive airbag cushion.

Disclosure

AIRBAG CUSHION EXHIBITING LOW FABRIC USAGE AND SIMULTANEOUSLY HIGH AVAILABLE INFLATION AIRSPACE VOLUME

Technical Field

The present invention relates to an airbag cushion which simultaneously exhibits a very low amount of fabric utilized to produce the target airbag cushion in correlation to an overall high amount of available inflation airspace within the cushion itself. These two correlative elements are now combined for the first time in what is defined as an effective fabric usage index (being the quotient of the amount of fabric utilized in the construciton of the airbag cushion and the available inflation airspace volume). The inventive airbag cushion must possess an effective fabric usage factor of at most 0.0330. A cushion exhibiting such low seam usage and fabric usage factors and also comprising an integrated looped pocket for the disposition of an inflator can is also provided as well as an overall vehicle restraint system comprising the inventive airbag cushion.

Background of the Prior Art

Inflatable protective cushions used in passenger vehicles are a component of relatively complex passive restraint systems. The main elements of these systems are: an impact sensing system, an ignition system, a propellant material, an attachment device, a system enclosure, and an inflatable protective cushion. Upon sensing an

impact, the propellant is ignited causing an explosive release of gases filing the cushion to a deployed state which can absorb the impact of the forward movement of a body and dissipate its energy by means of rapid venting of the gas. The entire sequence of events occurs within about 30 milliseconds. In the undeployed state, the cushion is stored in or near the steering column, the dashboard, in a door, or in the back of a front seat placing the cushion in close proximity to the person or object it is to protect.

Inflatable cushion systems commonly referred to as air bag systems have been used in the past to protect both the operator of the vehicle and passengers. Systems for the protection of the vehicle operator have typically been mounted in the steering column of the vehicle and have utilized cushion constructions directly deployable towards the driver. These driver-side cushions are typically of a relatively simple configuration in that they function over a fairly small well-defined area between the driver and the steering column. One such configuration is disclosed in U.S. Patent 5,533,755 to Nelsen et al., issued July 9, 1996, the teachings of which are incorporated herein by reference.

Inflatable cushions for use in the protection of passengers against frontal or side impacts must generally have a more complex configuration since the position of a vehicle passenger may not be well defined and greater distance may exist between the passenger and the surface of the vehicle against which that passenger might be thrown in the event of a collision. Prior cushions for use in such environments are disclosed in U.S. Patent 5,520,416 to Bishop, issued May 28, 1996; U. S. Patent 5,454,594 to Krickl issued October 3, 1995; U.S. Patent 5,423,273 to

Hawthorn et al. issued June 13, 1995; U.S. Patent 5,316,337 to Yamaji et al. issued May 31, 1994; U.S. Patent 5,310,216 to Wehner et al. issued May 10, 1994; U.S. Patent 5,090,729 to Watanabe issued February 25, 1992; U.S. Patent 5,087,071 to Wallner et al. issued Feb. 11, 1992; U.S. Patent 4,944,529 to Backhaus issued July 31, 1990; and U.S. Patent 3,792,873 to Buchner et al. issued February 19, 1974, all of which are incorporated herein by reference.

The majority of commercially used restraint cushions are formed of woven fabric materials utilizing multifilament synthetic yarns of materials such as polyester, nylon 6 or nylon 6,6 polymers. Representative fabrics for such use are disclosed in U.S. Patent 4,921,735 to Bloch issued May 1, 1990; U.S. Patent 5,093,163 to Krummheuer et al. issued March 3, 1992; U.S. Patent 5,110,666 to Menzel et al. issued May 5, 1992; U.S. Patent 5,236,775 to Swoboda et al. August 17, 1993; U.S. Patent 5,277,230 to Sollars, Jr. issued January 11, 1994; U.S. Patent 5,356,680 to Krummheuer et al. October 18, 1994; U.S. Patent 5,477,890 to Krummheuer et al. issued December 26, 1995; U.S. Patent 5,508,073 to Krummheuer et al., issued April 16, 1996; U.S. Patent 5,503,197 to Bower et al. issued April 2, 1996 and U.S. Patent 5,704,402 to Bowen et al. issued January 6, 1998, all of which are incorporated herein by reference.

As will be appreciated, the permeability of the cushion structure is an important factor in determining the rate of inflation and subsequent rapid deflation following the impact event. In order to control the overall permeability of the cushion, it may be desirable to use differing materials in different regions of the

cushion. Thus, the use of several fabric panels in construction of the cushion may prove to be a useful design feature . The use of multiple fabric panels in the cushion structure also permits the development of relatively complex three -dimensional geometries which may be of benefit in the formation of cushions for passenger side applications wherein a full bodied cushion is desired. While the use of multiple fabric panels provides several advantages in terms of permeability manipulation and geometric design, the use of multiple fabric panels for use in passenger side restraint cushions has historically required the assembly of panels having multiple different geometries involving multiple curved seams.

As will be appreciated, an important consideration in cutting panel structures from a base material is the ability to maximize the number of panels which can be cut from a fixed area through close-packed nesting of the panels. It has been found that minimizing the number of different geometries making up panels in the cushion and using geometries with substantially straight line perimeter configurations generally permits an enhanced number of panels to be cut from the base material. The use of panels having generally straight line profiles has the added benefit of permitting the panels to be attached to one another using substantially straight seams or be substantially formed during the weaving process using a jacquard or dobby loom. Such a straight seam configuration provides a more cost-effective method of producing such airbags. The term "seam" denotes any manner or method of connecting separate fabric panels or separate portions of a single fabric panel. Thus, sewing (with thread, for example), welding (with ultrasonic stitching, for example), or weaving panels or portions together (with a jacquard or dobby loom, for exmaple),

and the like, may be employed for this purpose.

However, even with the utilization of substantially straight seams to produce airbags cushions, a problem still resides in the need for labor-intensive cutting and sewing operations for large-scale manufacture. Furthermore, since the costs of producing airbag fabrics are relatively high and there is a general need to reduce such costs, there is a consequent need to more efficiently make use of the fabric by lowering the amount which needs to be cut (cutting operations also translate into higher labor costs), reducing the amount of fabric used in order to provide substantially lower packing volumes (in order to reduce the size of the airbag modules in cars since available space on dashboards, doors, and the like, are at a premium within automobiles), and reducing the shipping weight of such products (which translates into lower shipping costs), as well as other highly desired reasons. However, it has been problematic to reduce such utilized fabric amounts in the past without consequently also reducing the available inflation airspace volume within the cushion product. There is a need then to reduce the amount of time to produce airbag cushions while simultaneously providing the lowest amount of fabric and simultaneously allow for a sufficient volume of air (gas) to inflate the target airbag cushion during an inflation event (herein described as "available inflation airspace"").

Such a desired method and product has not been available, particularly for passenger-side airbags which, as noted previously require greater amount of fabric for larger volumes of air (gas) to provide the greatest amount of protection area to a passenger. With greater amounts of fabric needed, generally this has translated into the need for longer seams to connect and attach fabric panels, which in turn translates into greater

amounts of time needed for sewing, and the like, operations. Furthermore, there has not been any discussion within the prior art of the possibility of simultaneously reducing the amount of the required amount of utilized fabric while providing sufficient volumes of available inflation airspace within the target airbag cushion. Thus, a need exists to produce high available inflation airspace volume airbag cushions with a minimal requirement in fabric utilization to manufacture the overall cushion product. As noted above, the prior art has not accorded any advancements or even discussions to this effect.

Description of the Invention

In view of the foregoing, it is a general object of the present invention to provide a cost-effective, easy to manufacture airbag cushion for utilization within a vehicle restraint system. The term "vehicle restraint system" is intended to mean both inflatable occupant restraining cushion and the mechanical and chemical components (such as the inflation means, ignition means, propellant, and the like). It is a more particular object of the present invention to provide a vehicle restraint system wherein the target airbag cushion preferably comprises very low amounts of fabric and comprises all substantially straight seams to attach its plurality fabric components together (although as noted above, other configured seams may also be used as long the overall required effective seam usage factor is met). A further object of this invention is to provide an easy-to-assemble airbag cushion which is minimally labor-intensive to manufacture, requires much lower fabric costs due to a substantial reduction in the overall requirement of utilized fabric amounts, and which also

comprises an integrated looped pocket for the disposition of an inflator can within the airbag cushion. It is still a further object of this invention to provide a vehicle restraint system comprising an airbag cushion which provides the maximum amount of available inflation airspace volume simultaneously with the lowest length of seam (or seams) and lowest amount of utilized fabric necessary to manufacture the cushion. Another object of the invention is to provide a method of making a low cost airbag cushion (due to low levels of labor required to sew the component parts together and reduced amount of fabric to manufacture and cut) of simple and structurally efficient design.

To achieve these and other objects and in accordance with the purpose of the invention, as embodied and broadly described herein, the present invention provides an airbag cushion having at least one fabric component, wherein said airbag cushion possesses an effective fabric usage factor of less than about 0.0330. The effective fabric usage factor is derived from an effective fabric usage index which concerns (and is defined as) the quotient of the total amount of fabric utilized to manufacture the airbag cushion (measured in square meters) over the total volume of available inflation airspace within the airbag cushion (measured in liters). In order to exhibit a sufficiently low effective fabric usage factor, the amount of fabric must be very low with a correspondingly high available inflation airspace volume. Of course, this airspace volume will be the same for each factor since the measurements of both factors (seam usage and fabric usage) are made for the same bag. Such an airbag cushion may comprise at least two separate fabric panels or a single panel with portions which require connection (preferably through the utilization of at least one

substantially straight seam). The inventive bag is able to provide high available inflation airspace volumes due to the particular configurations of the used fabric panels or portions. The configurations permit more efficient utilization of fabric webs by cutting panels from the webs and producing less waste of unused fabric. The preferred embodiment is discussed in greater detail below.

The effective fabric usage factor (as defined within the correlating seam usage index formula, above) for the inventive airbag cushion then is preferably less than about 0.0330, more preferably less than 0.030, still more preferably less than 0.029, even more preferably less than 0.028, and most preferably lower than 0.027. Thus, the volume of available inflation airspace within the airbag cushion should be as great as possible with the amount of fabric utilized reduced to its absolute minimum while still providing sufficient protection to a passenger in an automobile during a collision event.

A driver-side airbag will generally comprise a low amount of utilized fabric but also does not provide a correlative high volume of available airspace; and the prior art passenger-side airbags require large amount of fabric. Although the available inflation airspace volume in such passenger-side airbags is rather large, the total amount of utilized fabric is too large to meet the aforementioned preferred effective fabric usage factor within that index. The inventive cushion therefore is relatively easy to manufacture, requires very low sewing, or similar type, attachment operations of its fabric panel components, requires very low amounts of fabric, but is also configured to provide an optimum large amount of available inflation airspace for maximum protection to a passenger during a collision event.

The present invention also provides an airbag cushion possessing the required effective fabric usage factor which also comprises a looped pocket for introduction of the inflator can of an inflator assembly. In the most preferred embodiment includes two mirror-image body panel sections two substantially straight seams along corresponding lateral boundary edges. Any boundary segments of the body panels which are not joined to one another are joined around the perimeter of a, preferably, rectilinear panel by a series of short, substantially straight seams. Such a configuration thereby forms a looped pocket in the airbag as well as an overall inflatable cushion structure. The airbag itself need not be created from two mirror-image body panel sections as any configuration of fabric panels will function properly in this invention as long as a three-dimensional inflatable cushion is formed during an inflation event and a looped pocket is created in the airbag in which the at least the inflator can of an inflator assembly is disposed.

Additional objects and advantages of the invention will be set forth in part in the description which follows, and in part will be obvious from the description, or may be learned by practice for the invention. It is to be understood that both the foregoing general description and the following detailed description of preferred embodiments are exemplary and explanatory only, and are not to be viewed as in any way restricting the scope of the invention as set forth in the claims.

Brief Description Of The Drawings

The accompanying drawings, which are incorporated in and constitute a part of this specification, illustrate several potentially preferred embodiments of the invention and together with the description serve to explain the principles of the invention wherein:

FIG. 1 is an aerial view of a portion of a fabric web with lines indicating the specific preferred locations for cutting to form two sets of fabric panels to manufacture two separate inventive cushions, each for the inclusion within a vehicle restraint system configured within a module which is stored substantially vertically.

FIG. 2 is an aerial view of a preferred cut fabric panel with second and third smaller preferred cut panels connected thereto.

FIG. 3 is an aerial view of the connected preferred cut fabric panels showing the first folding step in producing the mouth portion of the target cushion.

FIG. 4 is an aerial view of the connected preferred cut fabric panels showing the second folding step in producing the mouth portion of the target cushion.

FIG. 5 is an aerial view of the connected preferred cut fabric panels showing the third folding step in producing the mouth portion of the target cushion as well as the entire connected fabric panel composite folded over and connected to itself.

FIG. 6 is an aerial view of the preferred cut fabric front panel of the target cushion.

FIG. 7 is a front view of the finished target cushion showing the preferred front panel and the substantially straight seams connecting the front panel to the remaining preferred cut fabric panels.

FIG. 8 is a side view of the finished, unfolded, and non-inflated, target cushion.

FIG. 9 is a cut-away side view of a vehicle for transporting an occupant illustrating the deployment of an inflatable restraint cushion within a vehicle restraint system according to the present invention.

FIG. 10 is an aerial view of a portion of a fabric web with lines indicating the specific preferred locations for cutting to form two sets of fabric panels to manufacture two separate inventive cushions, each for the inclusion within a vehicle restraint system configured within a module which is stored substantially horizontally.

FIG. 11 is an aerial view of a preferred cut fabric panel with second and third smaller preferred cut panels connected thereto.

FIG. 12 is an aerial view of the connected preferred cut fabric panels showing the first folding step in producing the mouth portion of the target cushion.

FIG. 13 is an aerial view of the connected preferred cut fabric panels showing the second folding step in producing the mouth portion of the target cushion.

FIG. 14 is an aerial view of the connected preferred cut fabric panels showing the third folding step in producing the mouth portion of the target cushion as well as the entire connected fabric panel composite folded over and connected to itself.

FIG. 15 is an aerial view of the preferred cut fabric front panel of the target cushion.

FIG. 16 is a front view of the finished target cushion showing the preferred front panel and the substantially straight seams connecting the front panel to the remaining preferred cut fabric panels.

FIG. 17 is a side view of the finished, unfolded, and non-inflated, target cushion.

FIG. 18 is a cut-away side view of a vehicle for transporting an occupant illustrating the deployment of an inflatable restraint cushion within a vehicle restraint system according to the present invention.

FIG. 19 is an aerial view of a portion of a fabric web with lines indicating the specific preferred locations for cutting to form two sets of fabric panels to manufacture two separate inventive cushions, each which provide means for an integrated mouth to form a pocket for the disposition of an inflation can therein.

FIG. 20 is an aerial view of a preferred cut fabric panel with second and third smaller preferred cut panels connected thereto.

FIG. 21 is an aerial view of the connected preferred cut fabric panels showing the entire connected fabric panel composite folded over and connected to itself.

FIG. 22 is an aerial view of the preferred cut fabric front panel of the target cushion.

FIG. 23 is a front view of the finished target cushion showing the preferred front panel and the substantially straight seams connecting the front panel to the remaining preferred cut fabric panels.

FIG. 24 is a top view of the finished, unfolded and non-inflated, target cushion.

FIG. 25 is a side view of the finished, unfolded and non-inflated, target cushion including the integrated mouth structure for the disposition of an inflation can therein.

FIG. 26 is a cut-away side view of a vehicle for transporting an occupant illustrating the deployment of an inflatable restraint cushion within a vehicle restraint system according to the present invention.

Description Of The Preferred Embodiments

Reference will now be made in detail to potentially preferred embodiments of the invention, examples of which have been illustrated in the accompanying drawings. It is to be understood that it is in no way intended to limit the invention to such illustrated and described embodiments. On the contrary, it is intended to cover all alternatives, modifications and equivalents as may be included within the true spirit and scope of the invention as defined by the appended claims and equivalents thereto.

Turning now to the drawings, wherein like elements are denoted by like reference numerals throughout the various views, in **FIG. 1** there is shown a fabric web **10**, wherein eight fabric panels to be cut **12, 14, 16, 18, 20, 22, 24**, and **26** have been outlined. Also, specific fabrics pieces to be removed and slits **28, 30, 32** within the two largest fabric panels **12, 14** are outlined as well. The fabric web **10** in this specific example comprised nylon 6,6, 630 denier yarns, woven on a jacquard loom into a fabric **10** comprising 41 picks by 41 ends per inch.

In **FIG. 2**, two smaller preferred fabric panels **16, 18** have been connected to one preferred large fabric panel **12** by substantially straight seams **34, 36, 38, 40**. The composite fabric structure now has two small fabric portions **39, 41** uncovered by the two smaller fabric panels **16, 18**. The free space **30** remains and an imaginary straight line **42** denotes the future fold line within the fabric composite of the fabric panels **12,**

16, 18.

In **FIG. 3**, tie-rods **42, 44** have been placed over the small fabric portions **39, 41** parallel to the seams **38, 40**, and the fabric portions **39, 41** have been folded back in a manner to form a right angle at the point of contact between the two portions **39, 41**.

In **FIG. 4**, the small fabric portions **39, 41** have been folded over once again and seams **35, 37** have been produced to connect the fabric portions **39, 41** to themselves and to the smaller fabric panels **16, 18**. The folded over fabric portions **39, 41** provide reinforcement in order to withstand inflation pressures at the mouth opening of the cushion.

In **FIG. 5**, the fabric panel **12** has been folded over imaginary line **42** (in half) leaving one smaller fabric panel **16** in view (the other is not illustrated as it is now located on the bottom portion of fabric panel **12** directly beneath smaller fabric panel **18**). A seam **46** connects fabric panel **12** to itself and also connects the smaller fabric panels **16, 18** both to the larger panel **12** and to themselves. Upon unfolding of the connected composite, the non-connected ends of the panel **12** will form the same shape as the front panel **24** of **FIG. 6**. **FIG. 7** then shows the seam **48** needed to sew the non-connected ends of the large panel **12** (of **FIG. 5**), and **FIG. 8** provides a side view of the finished cushion **50** after all the connection through seams **38, 42, 34, 46** have been made.

FIG. 9 shows a fully deployed inflatable restraint cushion **50** in opposing relation to an occupant **52** located on the front seat **54** of a vehicle **56** such as an automobile, airplane, and the like. As shown, the cushion **50** may be outwardly

deployed from the dash panel **57** through an inflation means **58** from a position directly opposite the occupant **52**. It is to be understood, however, that the cushion **50** may likewise be deployed from any other desired location in the vehicle **56** including the steering wheel (not illustrated), the vehicle side panels (not illustrated), the floor (not illustrated), or the backrest of the front seat **54** for disposition in opposing relation to a rear passenger (not illustrated).

In **FIG. 10** there is shown a fabric web **110**, wherein eight fabric panels to be cut **112, 114, 116, 118, 120, 122, 124**, and **126** have been outlined. Also, specific slits **128, 129, 130, 32** within the two largest fabric panels **112, 114** are outlined as well. The fabric web **110** in this specific example comprised nylon 6,6, 630 denier yarns, woven on a jacquard loom into a fabric **110** comprising 41 picks by 41 ends per inch.

In **FIG. 11**, two smaller preferred fabric panels **116, 118** have been connected to one preferred large fabric panel **112** by substantially straight seams **144, 146, 148**. The composite fabric structure now has two small fabric portions **131, 150, 152** uncovered by the two smaller fabric panels **116, 118**. An imaginary straight line **142** denotes the future fold line within the fabric composite of the fabric panels **112, 116, 118**, which is noticeably off-center in order to ultimately allow for the bag to be deployed at an angle from a horizontally disposed dashboard (not illustrated).

In **FIG. 12**, tie-rods **153, 155** have been placed over the small fabric portions **150, 152** and have been folded back over the tie-rods **153, 155** as shown, folded again, as in **FIG. 13**, and connected to themselves by seams **152, 156**. The folded over fabric portions **150, 152** provide reinforcement in order to withstand inflation pressures at the mouth opening of the cushion.

In **FIG. 14**, the fabric panel **112** has been folded over imaginary line **142** leaving one smaller fabric panel **116** in view (the other is not illustrated as it is now located on the bottom portion of fabric panel **112** directly beneath smaller fabric panel **118**). A seam **158** connects fabric panel **112** to itself and also connects the smaller fabric panels **116, 118** both to the larger panel **112** and to themselves. Upon unfolding of the connected composite, the non-connected ends of the panel **112** will form the same shape as the front panel **124** of **FIG. 15**. **FIG. 16** then shows the seam **159** needed to sew the non-connected ends of the large panel **112** (of **FIG. 14**), and **FIG. 17** provides a side view of the finished cushion **160**.

FIG. 18 shows a fully deployed inflatable restraint cushion **160** in opposing relation to an occupant **162** located on the front seat **164** of a vehicle **166** such as an automobile, airplane, and the like. As shown, the cushion **160** may be outwardly deployed from the dash panel **167** through an inflation means **168** from a position directly opposite the occupant **162**. It is to be understood, however, that the cushion **160** may likewise be deployed from any other desired location in the vehicle **166** including the steering wheel (not illustrated), the vehicle side panels (not illustrated), the floor (not illustrated), or the backrest of the front seat **164** for disposition in opposing relation to a rear passenger (not illustrated).

In **FIG. 19** there is shown a fabric web **210**, wherein eight fabric panels to be cut **212, 214, 216, 218, 220, 222, 224**, and **226** have been outlined. Also, specific fabrics pieces to be removed and slits **228, 230, 232** within the two largest fabric panels **212, 214** are outlined as well. The fabric web **210** in this specific example comprised nylon 6,6, 630 denier yarns, woven on a jacquard loom into a fabric **210**

comprising 41 picks by 41 ends per inch.

In **FIG. 20**, two smaller preferred fabric panels **216, 218** have been connected to one preferred large fabric panel **212** by substantially straight seams **234, 236, 238, 240**. An imaginary straight line **242** denotes the future fold line within the fabric composite of the fabric panels **212, 216, 218**.

In **FIG. 21**, the fabric panel **212** has been folded over imaginary line **242** (in half) leaving one smaller fabric panel **216** in view (the other is not illustrated as it is now located on the bottom portion of fabric panel **212** directly beneath smaller fabric panel **218**). A seam **244** connects fabric panel **212** to itself and also connects the smaller fabric panels **216, 218** both to the larger panel **212** and to themselves. Upon unfolding of the connected composite, the non-connected ends of the panel **212** will form the same shape as the front panel **224** of **FIG. 22**. **FIG. 23** then shows the seam **252** needed to sew the non-connected ends of the large panel **212** (of **FIG. 21**), and

FIG. 24 provides a top view of a finished cushion **246** and **FIG. 25** provides a side view of a finished cushion **250** after all the connection through seams **234, 244, 248** have been made.

FIG. 26 shows a fully deployed inflatable restraint cushion **260** in opposing relation to an occupant **262** located on the front seat **264** of a vehicle **266** such as an automobile, airplane, and the like. As shown, the cushion **260** may be outwardly deployed from the dash panel **267** through an inflation means **268** from a position directly opposite the occupant **262**. It is to be understood, however, that the cushion **260** may likewise be deployed from any other desired location in the vehicle **266** including the steering wheel (not illustrated), the vehicle side panels (not illustrated),

the floor (not illustrated), or the backrest of the front seat **264** for disposition in opposing relation to a rear passenger (not illustrated).

These specific configurations and shapes provide the lowest overall fabric usage as compared to the available inflation airspace volume. Specific measurements for each inventive cushion manufactured in this configuration (but with different amounts of fabric utilized) are further described in Table 2, below.

Each of the panels utilized in these preferred embodiments may be formed from a number of materials including by way of example only and not limitation woven fabrics, knitted fabrics, non-woven fabrics, films and combinations thereof. Woven fabrics may be preferred with woven fabrics formed of tightly woven construction such as plain or panama weave constructions being particularly preferred. Such woven fabrics may be formed from yarns of polyester, polyamides such as nylon 6 and nylon-6,6 or other suitable material as may be known to those in the skill in the art. Multifilament yarns having a relatively low denier per filament rating of not greater than about 1-4 denier per filament may be desirable for bags requiring particular good foldability.

In application, woven fabrics formed from synthetic yarns having linear densities of about 40 denier to about 1200 denier are believed to be useful in the formation of the airbag according to the present invention. Fabrics formed from yarns having linear densities of about 315 to about 840 are believed to be particularly useful, and fabrics formed from yarns having linear densities in the range of about 400 to about 650 are believed to be most useful.

While each of the panels may be formed of the same material, the panels may also be formed from differing materials and or constructions such as, without limitation, coated or uncoated fabrics. Such fabrics may provide high permeability fabric having an air permeability of about 5 CFM per square foot or higher, preferably less than about 3 CFM per square foot or less when measured at a differential pressure of 0.5 inches of water across the fabric. Fabrics having permeabilities of about 1-3 CFM per square foot may be desirable as well. Fabrics having permeabilities below 2 CFM and preferably below 1 CFM in the uncoated state may be preferred. Such fabrics which have permeabilities below 2 CFM which permeability does not substantially increase by more than a factor of about 2 when the fabric is subjected to biaxial stresses in the range of up to about 100 pounds force may be particularly preferred. Fabrics which exhibit such characteristics which are formed by means of fluid jet weaving may be most preferred, although, as noted previously, weaving on jacquard and/or dobby looms also permits seam production without the need for any further labor-intensive sewing or welding operations.

In the event that a coating is utilized on one or more material panels, neoprene, silicone urethanes or disperse polyamides may be preferred. Coatings such as dispersed polyamides having dry add on weights of about 0.6 ounces per square yard or less and more preferably about 0.4 ounces per square yard or less and most preferably about 0.3 per square yard or less may be particularly preferred so as to minimize fabric weight and enhance foldability. It is, of course, to be understood that aside from the use of coatings, different characteristics in various panels may also be achieved through the use of fabrics incorporating differing weave densities and/or

finishing treatments such as calendaring as may be known to those in the skill of the art.

While the airbag cushions according to the present invention have been illustrated and described herein, it is to be understood that such cushions may also include additional components such as shape defining tethers, gas vents, and the like as may be known to those in the skill of the art.

With regard to comparable airbag cushions, the following table presents comparative seam usage factors for other well known and commercially available airbag cushions. The labels used are those used within Standard & Poor's DRI, a well known publication which denotes many different types of products offered for sale to the automotive industry.

TABLE 1

Fabric Usage Index Factors for Comparative Commercially Available Airbag Cushions

S&P DRI Number	Total Amount of Fabric Used (m)("C")	Available Inflation Airspace Volume (L)("B")	Fabric Usage Factor (C/B)
GM-C4	4.47	95.00	0.0471
W202	4.34	129.00	0.0337
GM4200	3.89	90.00	0.0432
414T	4.35	128.00	0.0340
CY	4.34	128.00	0.0339
CF	4.53	128.00	0.0354

The 414T and CF bags listed above are tilted cushions for use in conjunction with relatively horizontal dashboards. The others are used in conjunciton with substantially vertically configured dashboards.

Generally, a airbag module manufacturer or automobile manufacturer will specify what dimensions and performance characteristics are needed for a specific

model and make of car. Thus, airbag inflation airspace volume, front panel protection area (particularly for passenger-side airbag cushions), and sufficient overall protection for a passenger are such required specifications. In comparison with those commercially available airbag cushions listed above, the inventive airbag cushions which meet the same specifications (and actually exceed the overall passenger protection chacteristics versus the prior art cushions) but require less fabric, less seam length for sewing operations, and thus cost appreciably less than those competitive cushions. The dimensions and seam usage factors for the inventive bags (which compare with those in Table 1, above, directly, and as noted) are presented below in tabular form:

TABLE 2

Fabric Usage Index Factors for Inventive Airbag Cushions in Correlation to the S&P DRI Numbered Airbag Cushions Requiring Similar Dimensions and Performance Characteristics

Correlated Bags by S&P DRI Number	Total Amount of Fabric Used (m)("C")	Available Inflation Airspace Volume (L)("B")	Fabric Usage Factor (C/B)
GM-C4	2.41	95.00	0.0253
W202	3.50	129.00	0.0271
GM4200	2.58	90.00	0.0287
414T	3.64	128.00	0.0284
CY	3.64	128.00	0.0284
CF	3.50	128.00	0.0273

Clearly, the inventive bags, which possess the same available inflation airspace volume and front fabric panel area as the comparative prior art commercially available cushions (bags), require much less in the way of total fabric utilization, which thus correlates into overall much lower effective fabric usage factors.

Furthermore, as noted above, in standard crash tests, these inventive bags (cushions)

either performed as well as or outperformed their commercially available, more expensive, counterparts.

While specific embodiments of the invention have been illustrated and described, it is to be understood that the invention is not limited thereto, since modifications may certainly be made and other embodiments of the principals of this invention will no doubt occur to those skilled in the art. Therefore, it is contemplated by the appended claims to cover any such modifications and other embodiments as incorporate the features of this invention which in the true spirit and scope of the claims hereto.

Claims

What I claim is:

1. An airbag cushion having at least one fabric component, wherein said airbag cushion possesses an effective fabric usage factor of less than about 0.0330.

2. The airbag cushion of Claim 1 wherein said airbag cushion possesses an effective fabric usage factor of less than about 0.030.

3. The airbag cushion of Claim 2 wherein said airbag cushion possesses an effective fabric usage factor of less than about 0.029.

4. The airbag cushion of Claim 3 wherein said airbag cushion possesses an effective fabric usage factor of less than about 0.028.

5. The airbag cushion of Claim 4 wherein said airbag cushion possesses an effective fabric usage factor of less than about 0.027.

6 The airbag cushion of Claim 1 wherein said airbag cushion comprises a looped pocket into which an inflator can may be disposed.

7. The airbag cushion of Claim 7 wherein said airbag cushion further comprises tie-rods.

8. The airbag cushion of Claim 1 wherein said airbag cushion comprises at least two fabric components connected by at least one seam.

9. A vehicle restraint system comprising the airbag cushion of Claim 1.

10. A vehicle restraint system comprising the airbag cushion of Claim 2.

11. A vehicle restraint system comprising the airbag cushion of Claim 3.

12. A vehicle restraint system comprising the airbag cushion of Claim 4.

13. A vehicle restraint system comprising the airbag cushion of Claim 5.

14. A vehicle restraint system comprising the airbag cushion of Claim 6.

15. A vehicle restraint system comprising the airbag cushion of Claim 7.

16. A vehicle restraint system comprising the airbag cushion of Claim 8.

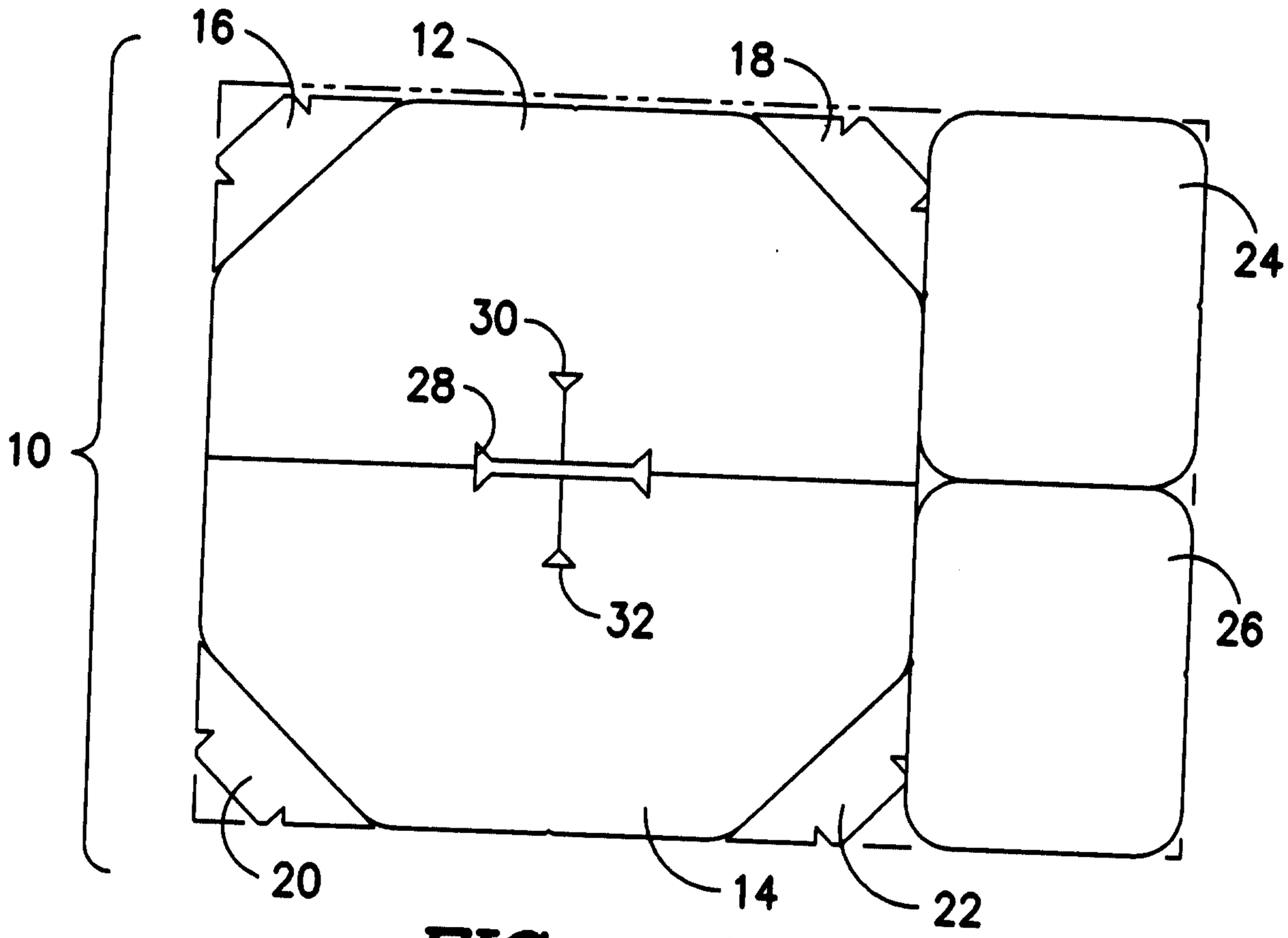

FIG. -1-

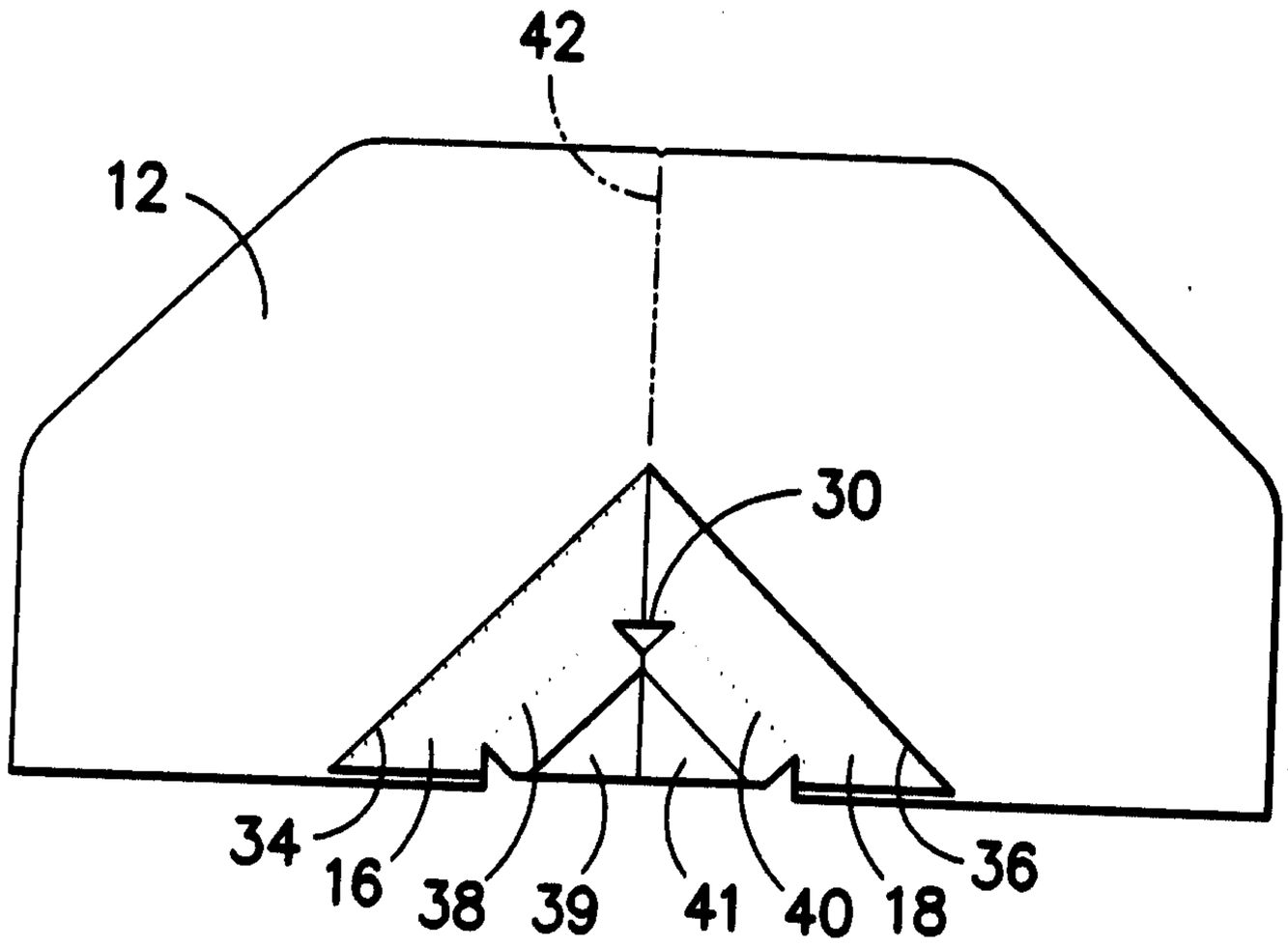

FIG. -2-

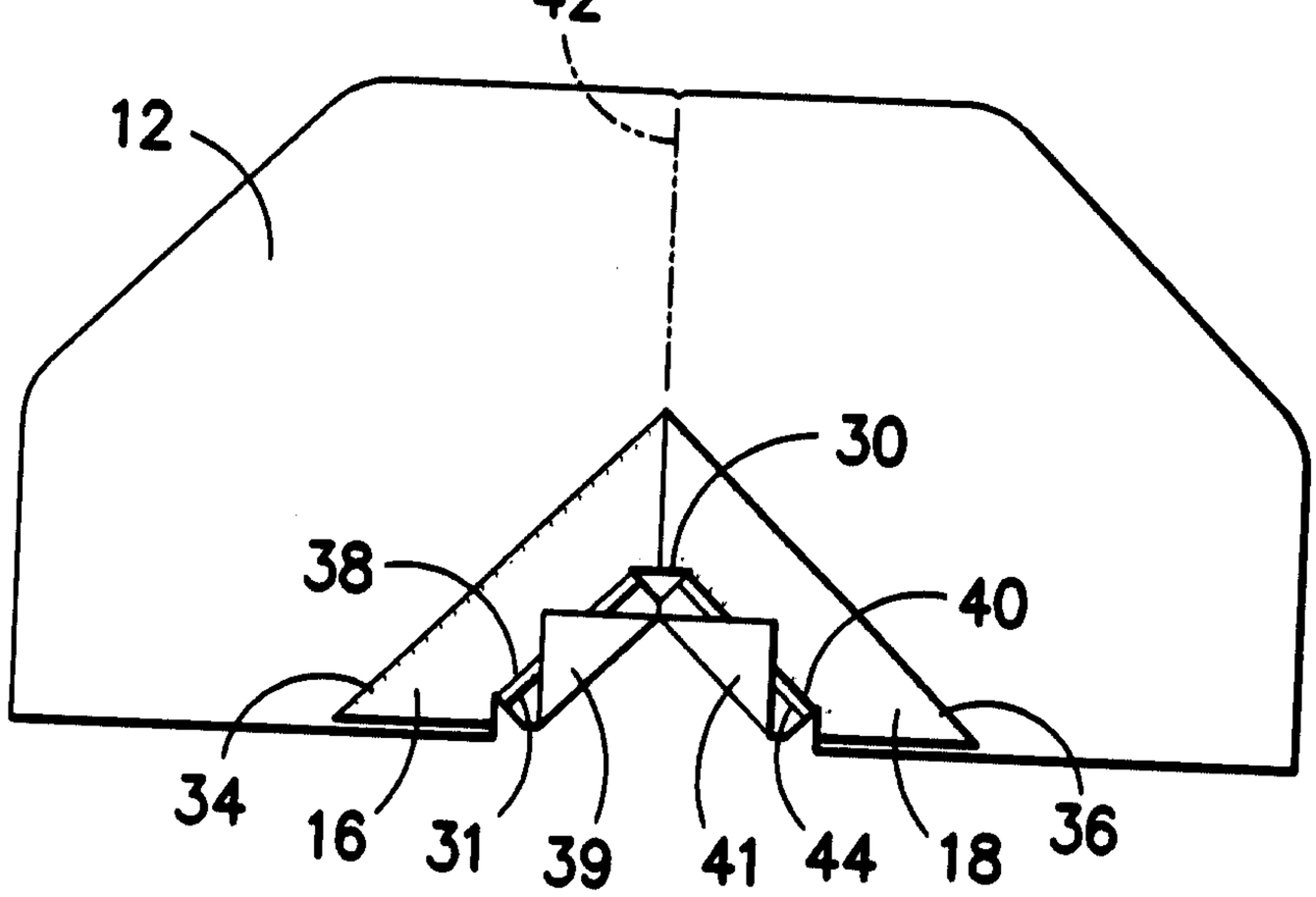
42
12
30
38
40
34
16
31
39
41
44
18
36

FIG. -3-

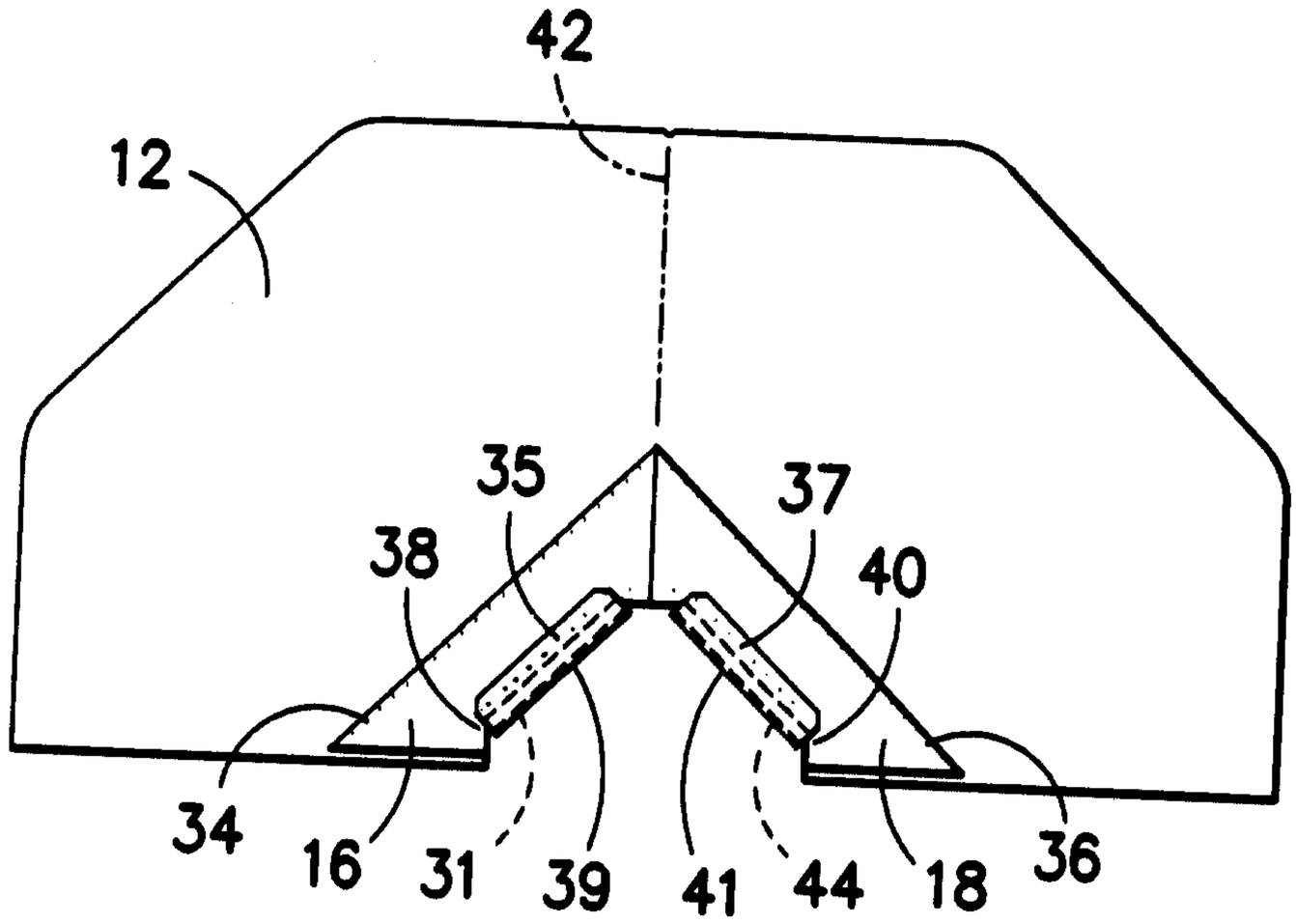
42
12
35
37
38
40
34
16
31
39
41
44
18
36

FIG. -4-

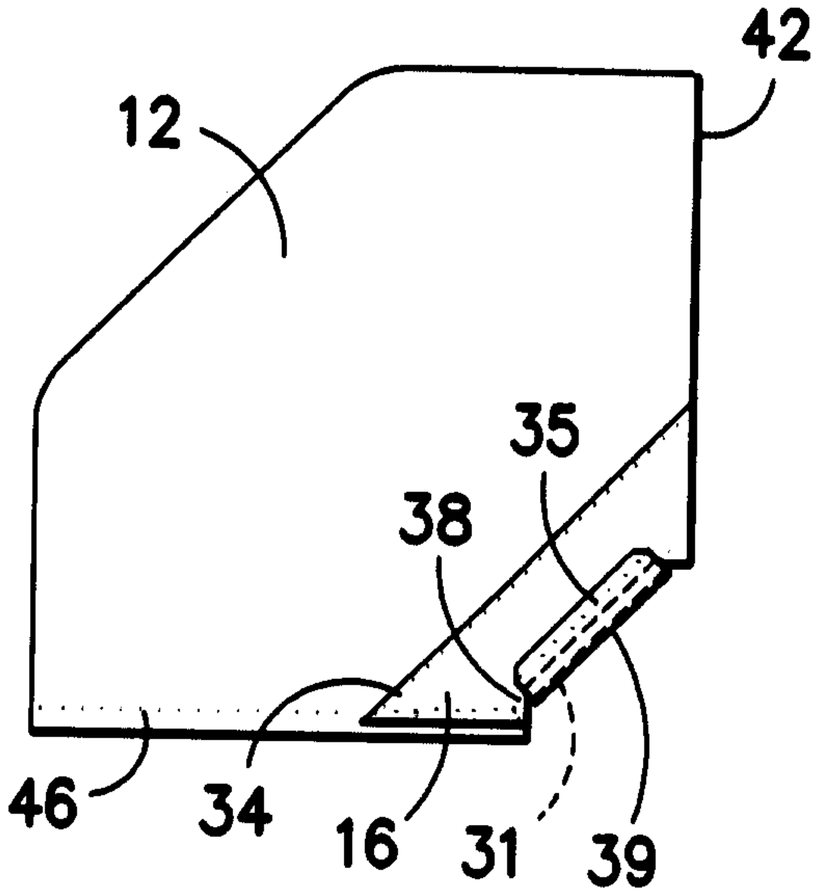

FIG. –5–

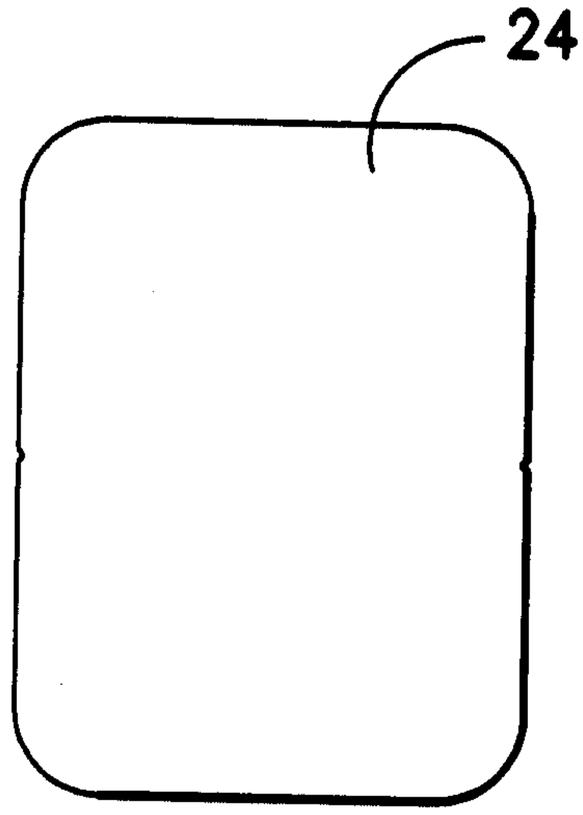

FIG. –6–

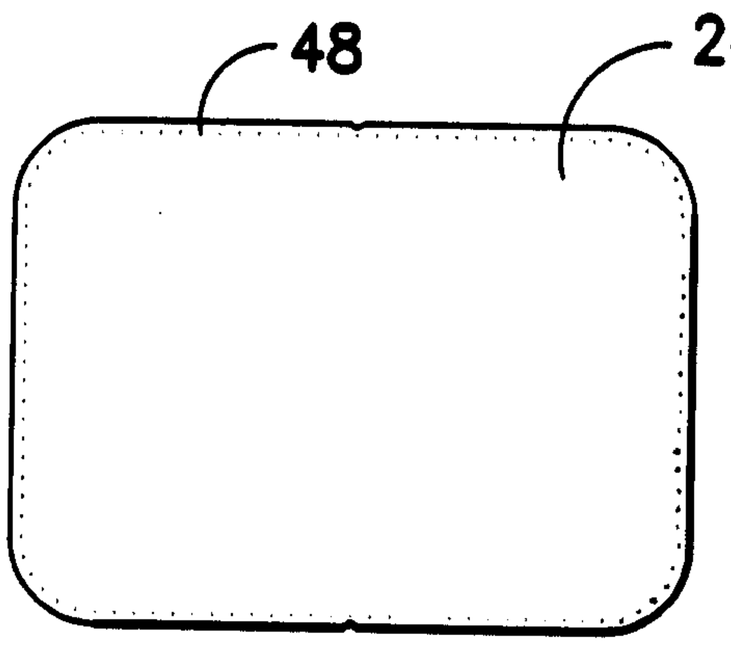

FIG. –7–

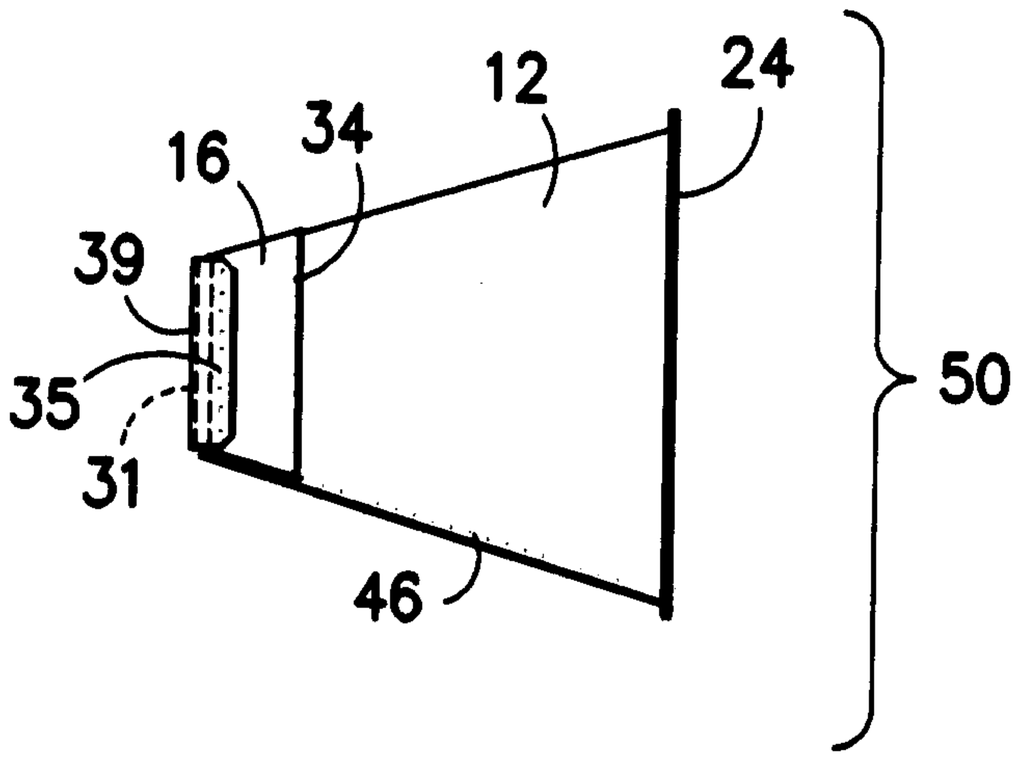

FIG. –8–

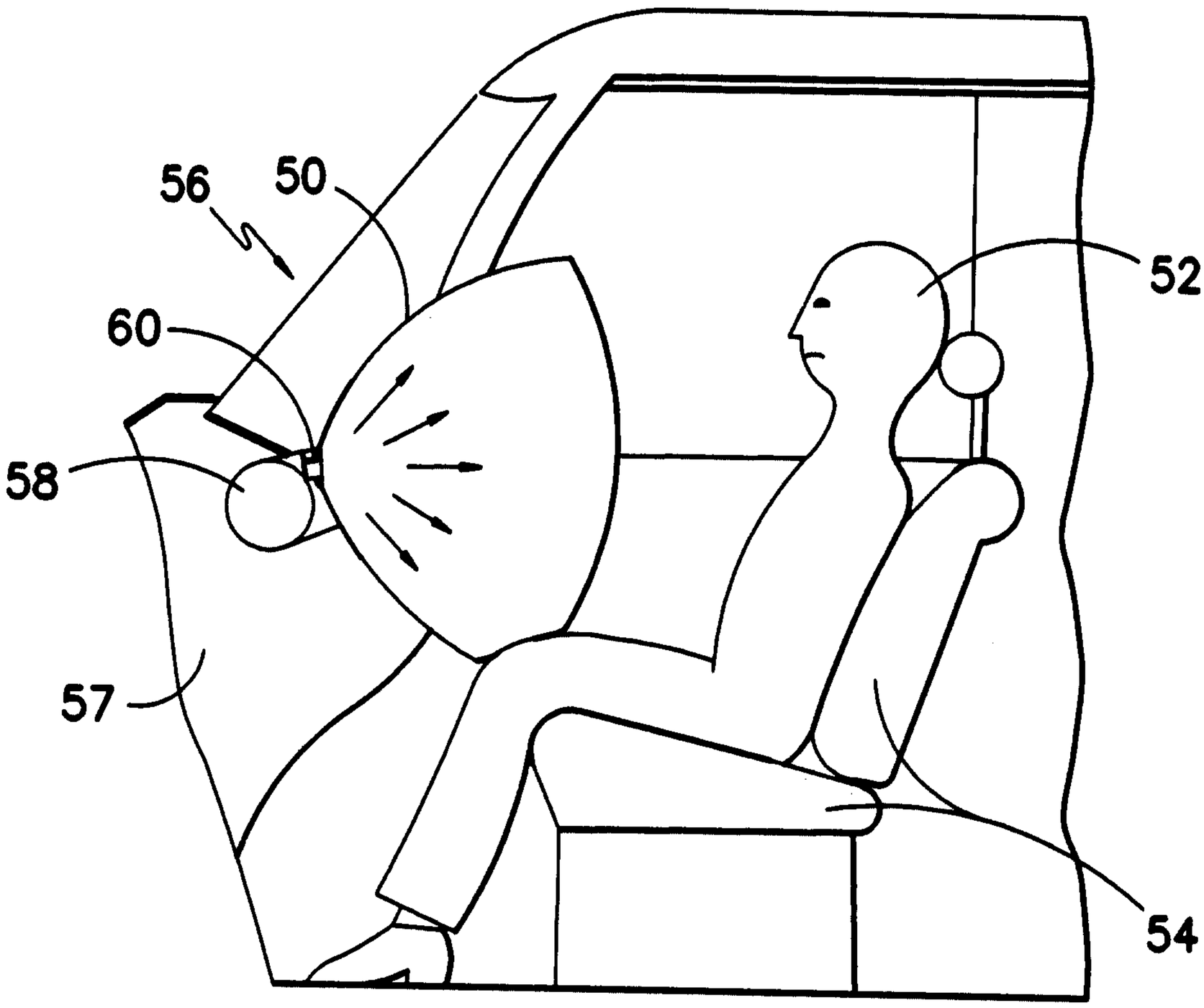

FIG. –9–

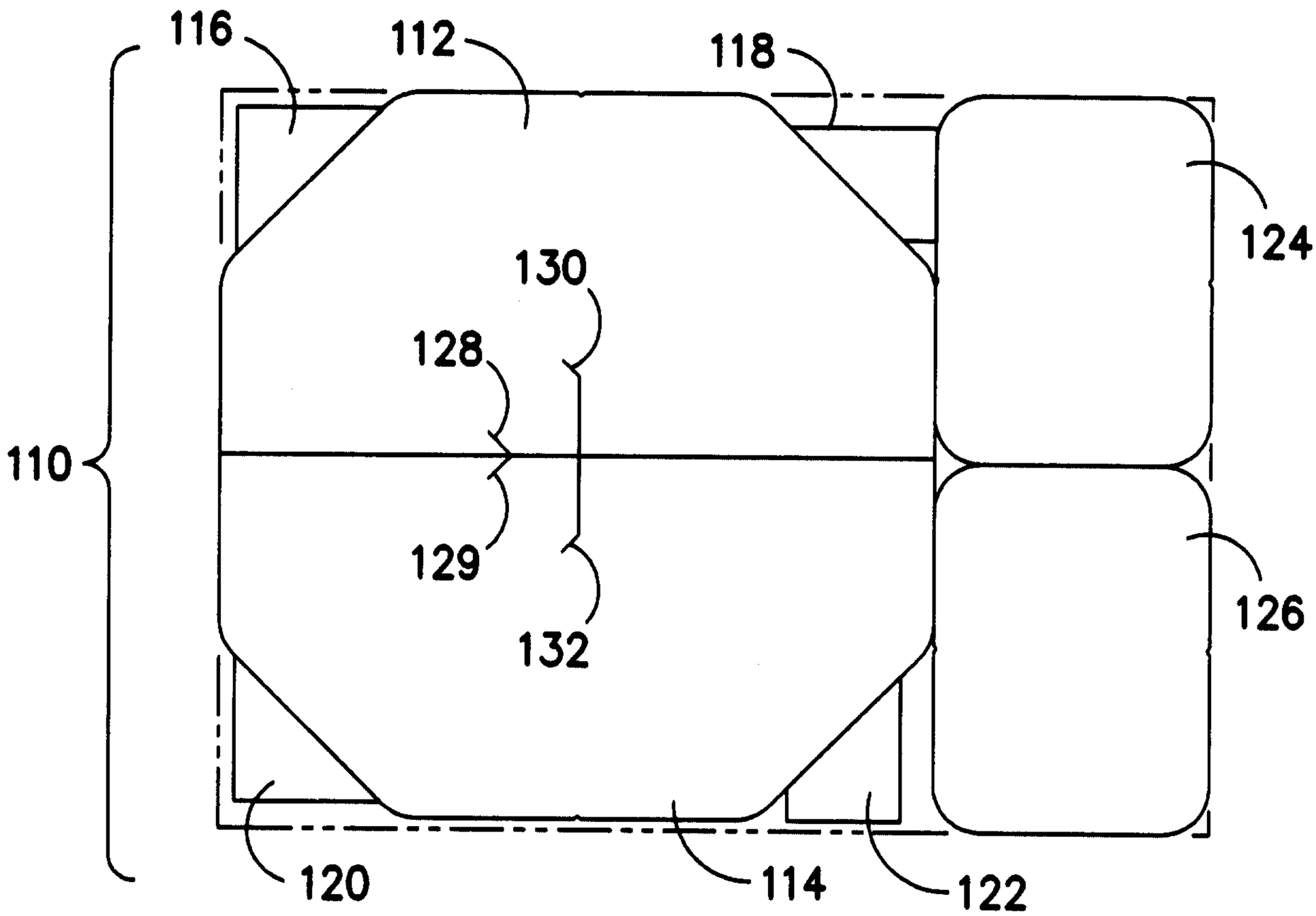
116
112
118
124
130
128
110
129
132
126
120
114
122

FIG. –10–

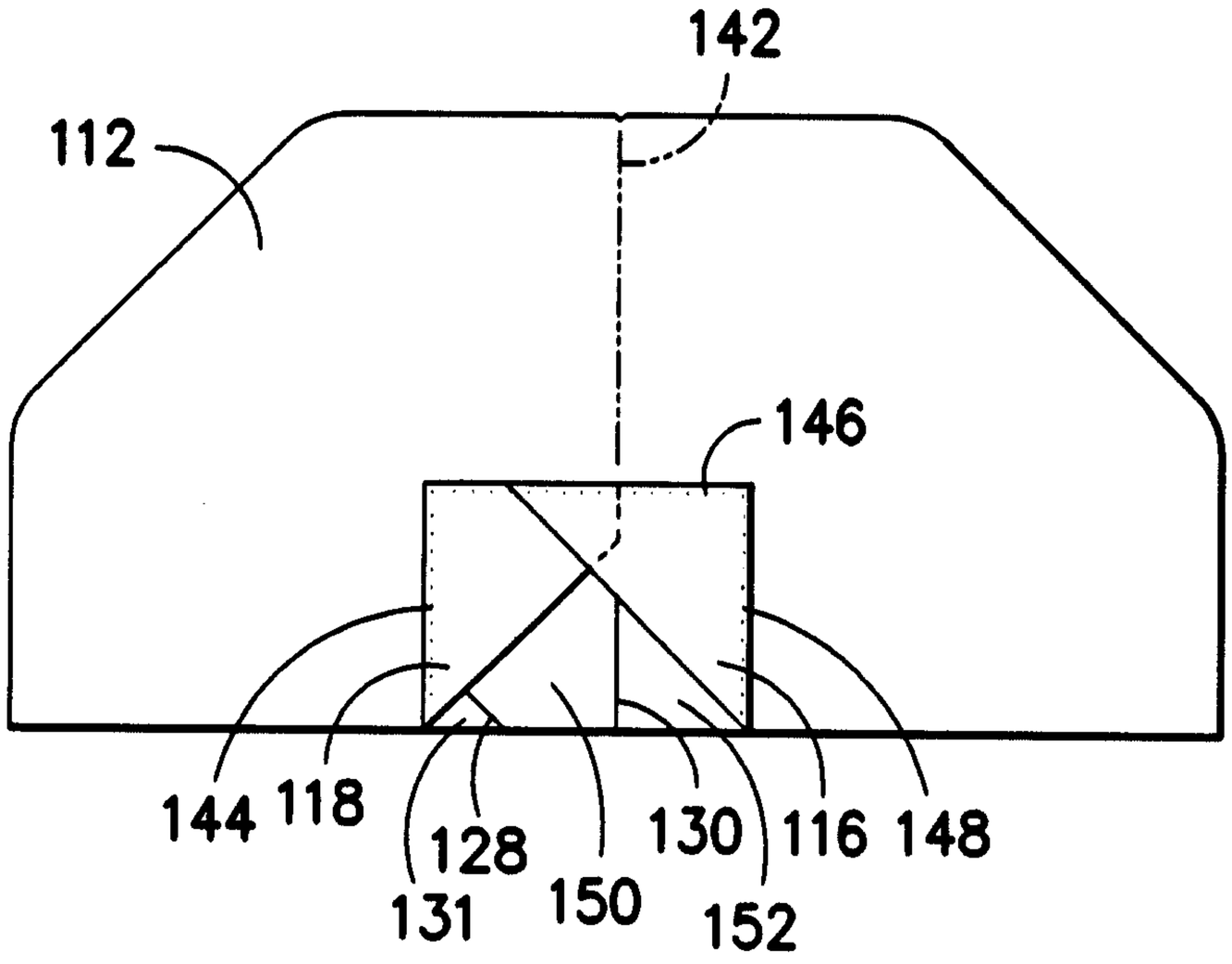
142
112
146
144
118
128
131
150
130
152
116
148

FIG. –11–

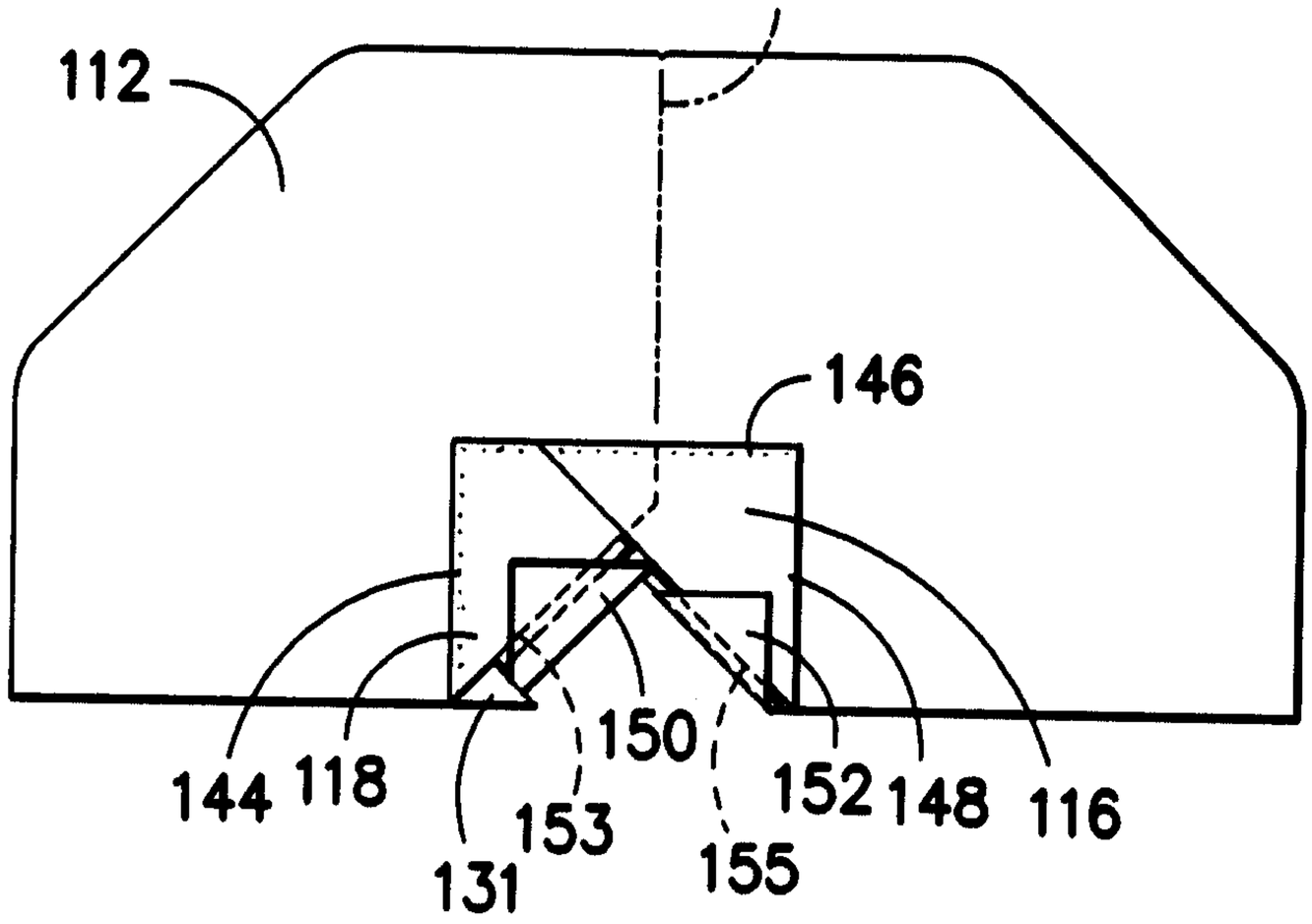
142
112
146
144
118
131
153
150
155
152
148
116

FIG. 12–

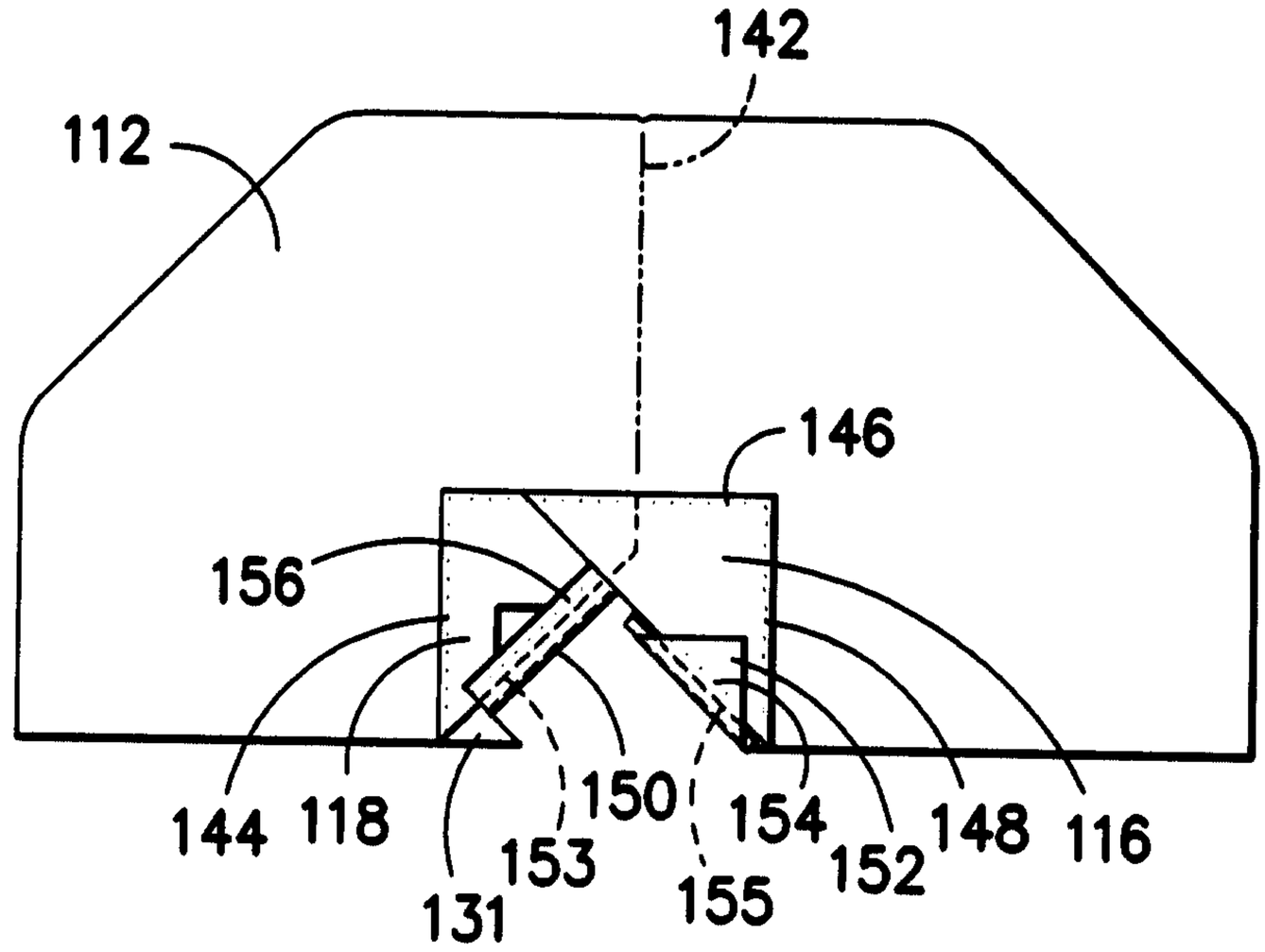
142
112
146
156
144
118
131
153
150
155
154
152
148
116

FIG. –13–

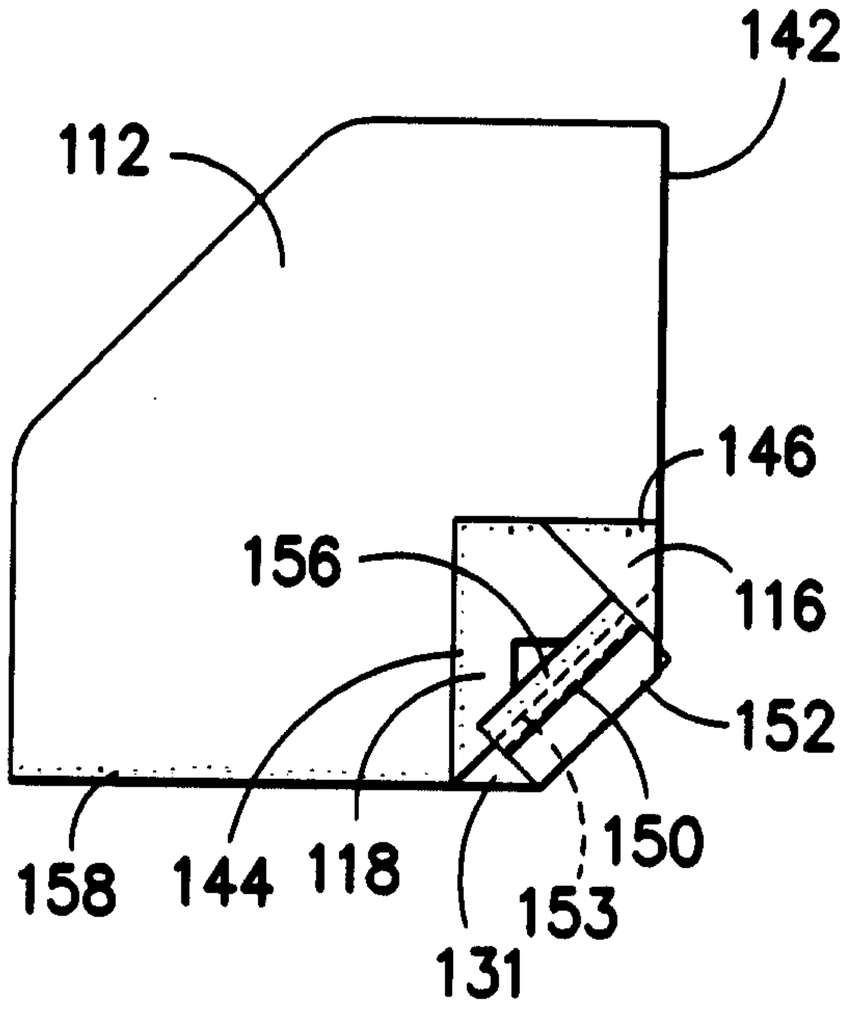

FIG. -14-

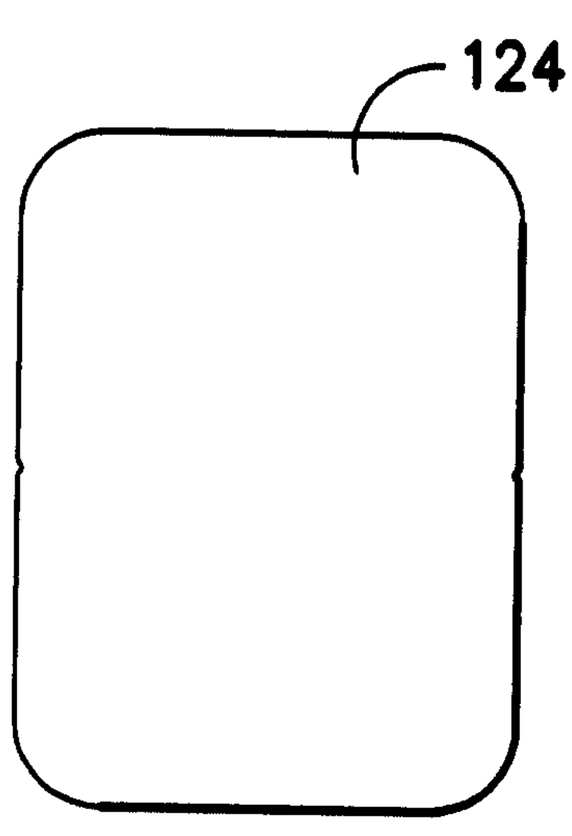

FIG. -15-

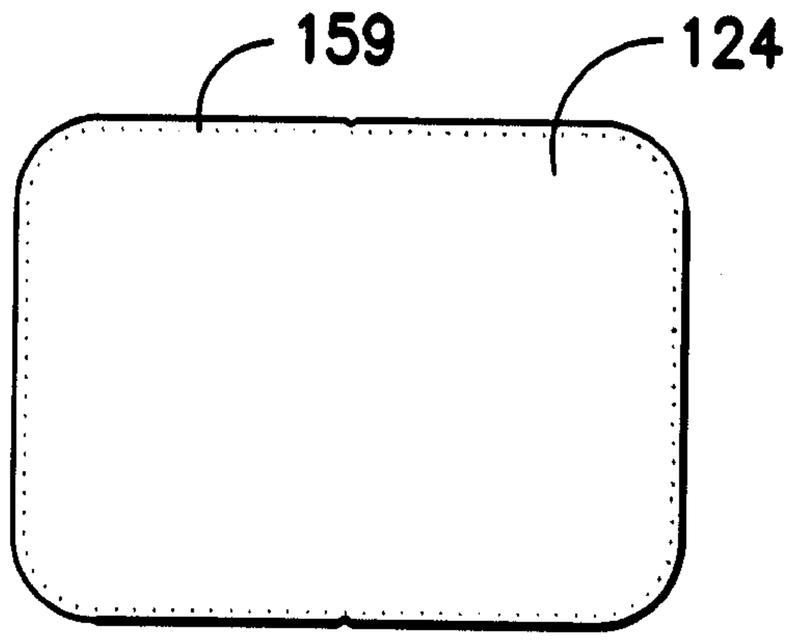

FIG. -16-

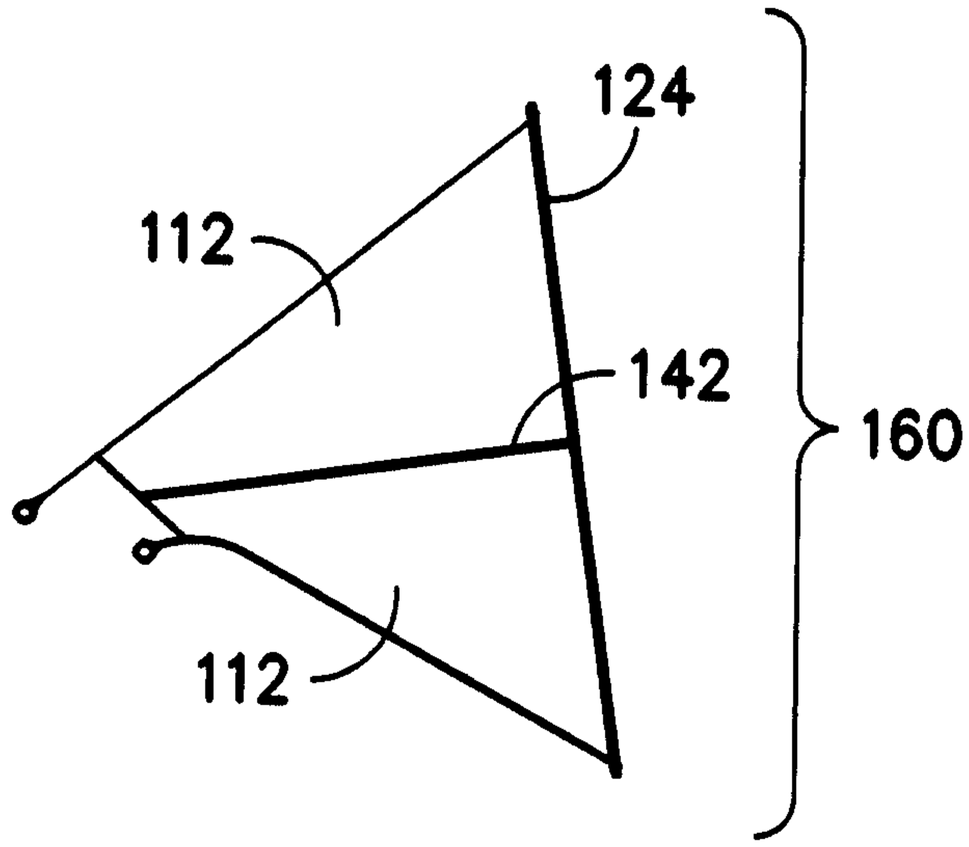

FIG. -17-

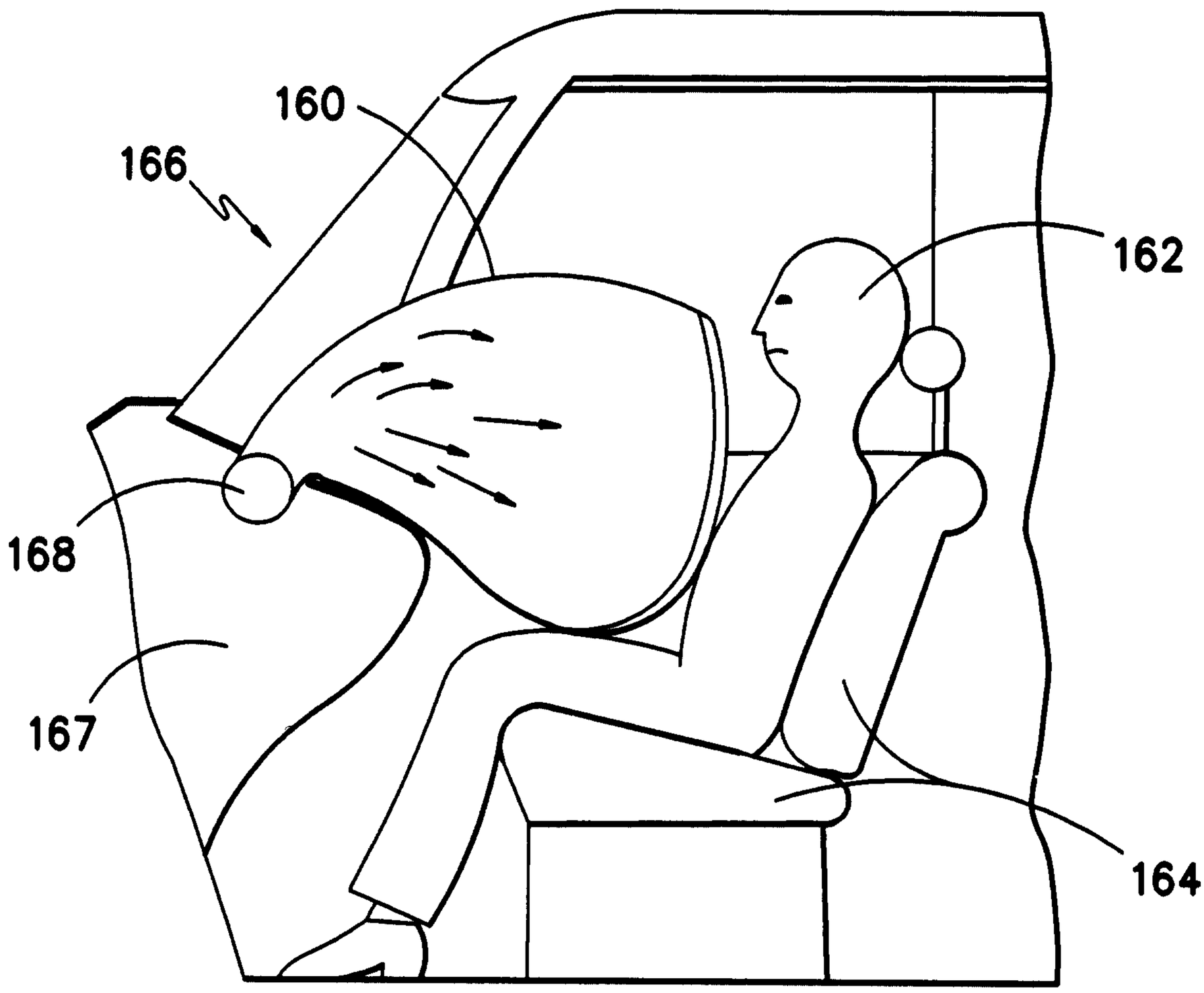

FIG. –18–

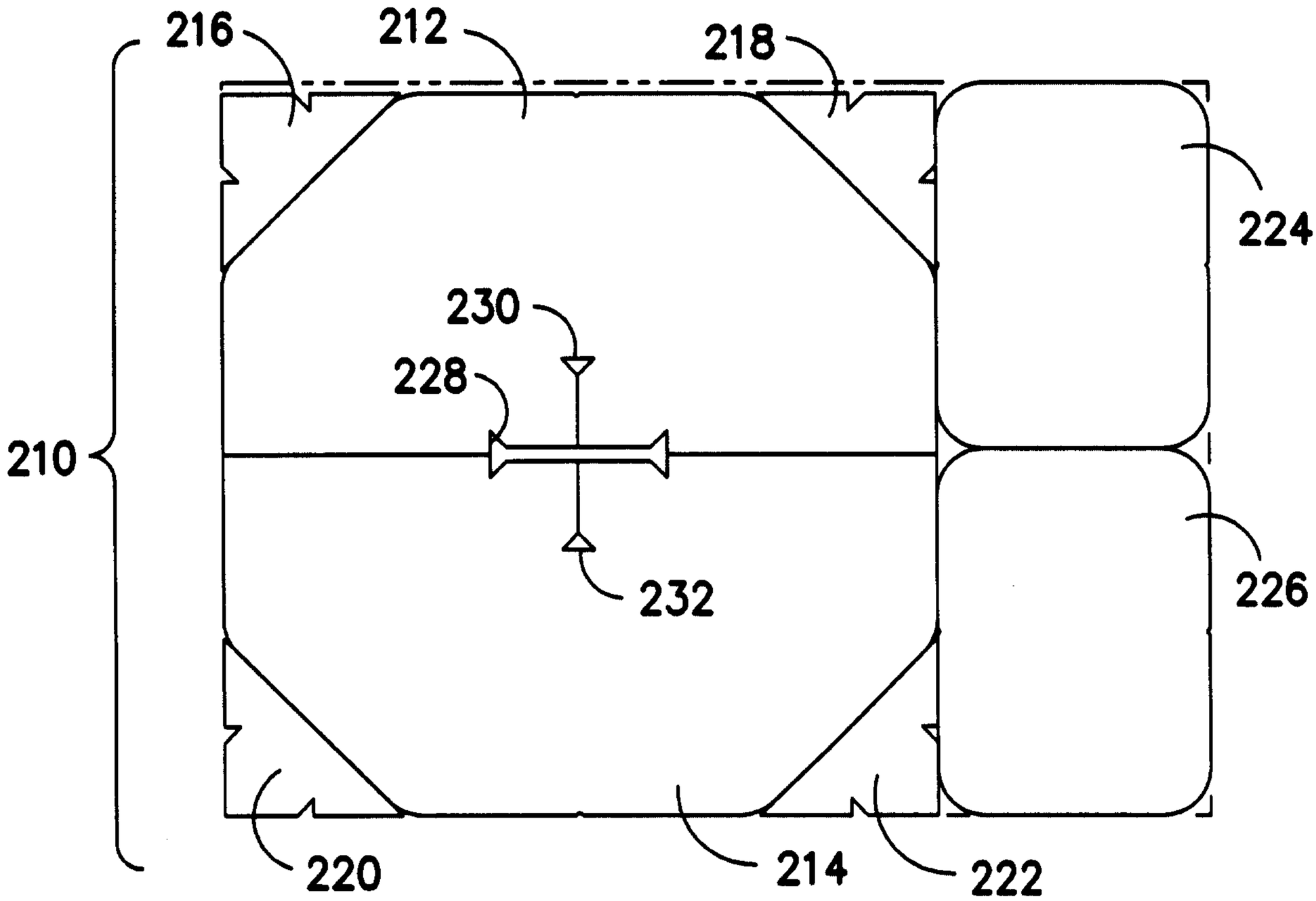
216
212
218
224
230
228
210
232
226
220
214
222

FIG. -19-

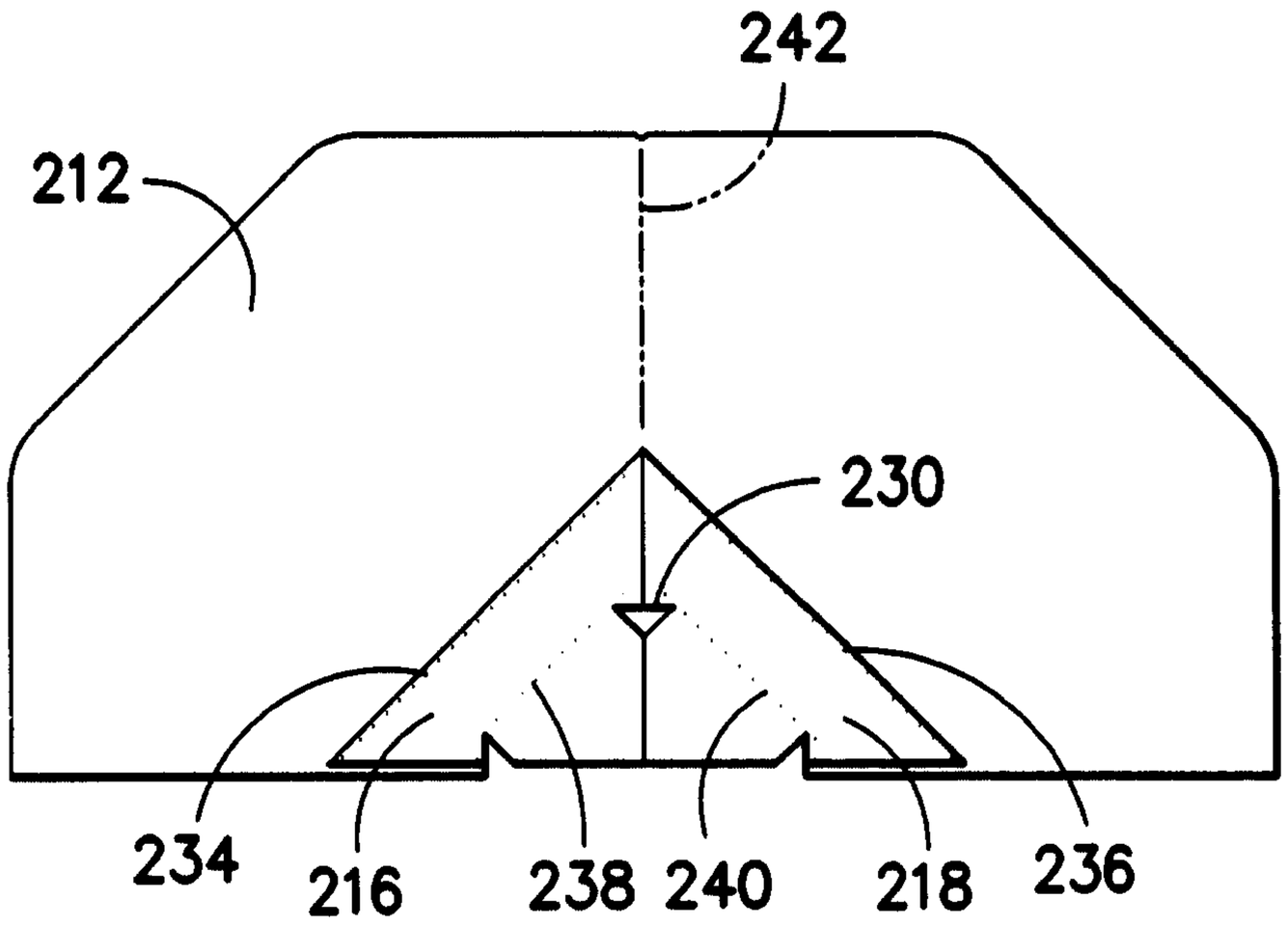
242
212
230
234
216
238
240
218
236

FIG. -20-

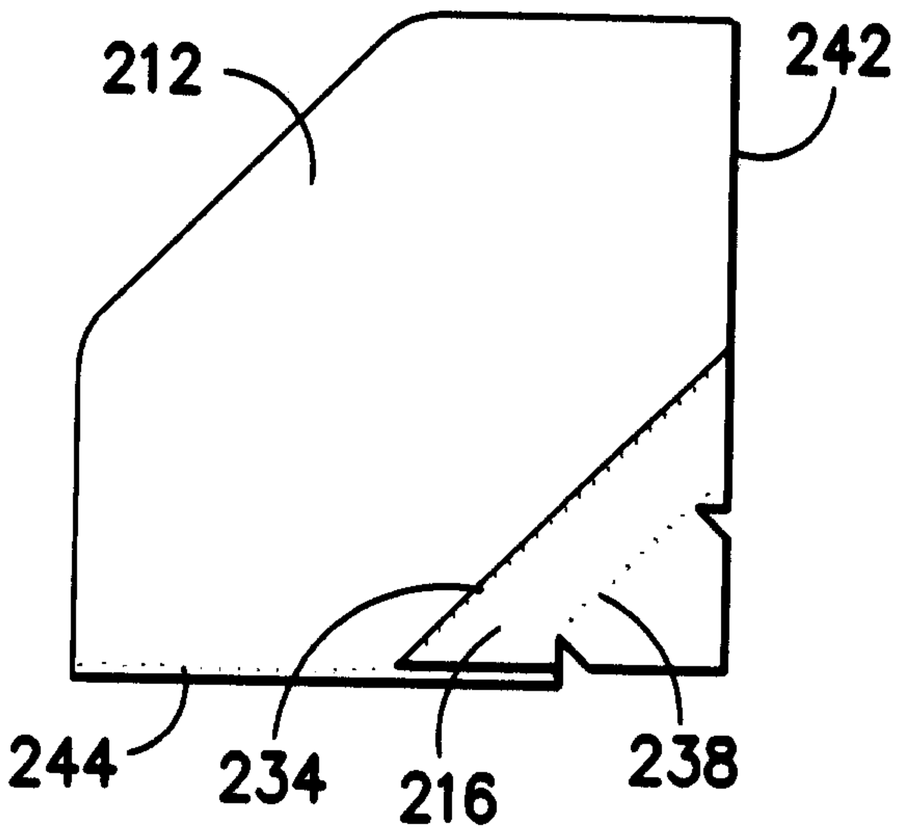

FIG. –21–

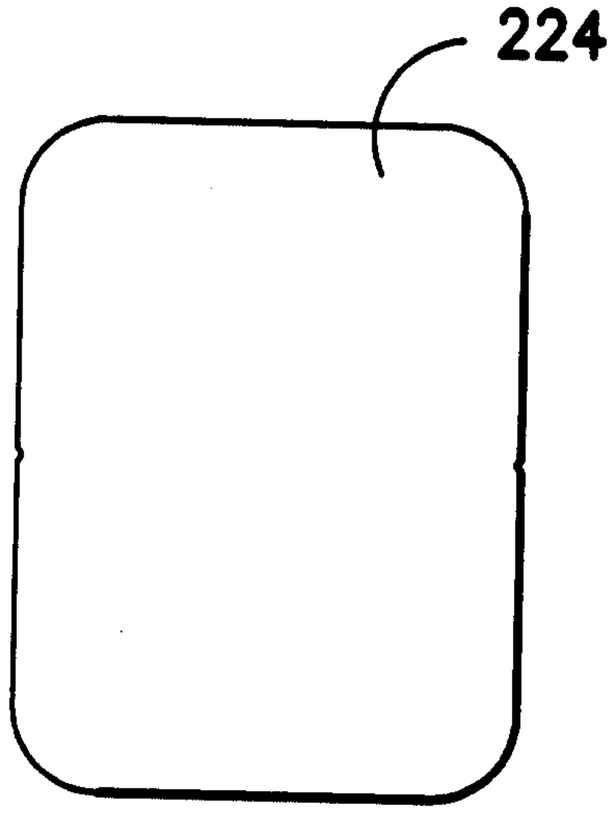

FIG. –22–

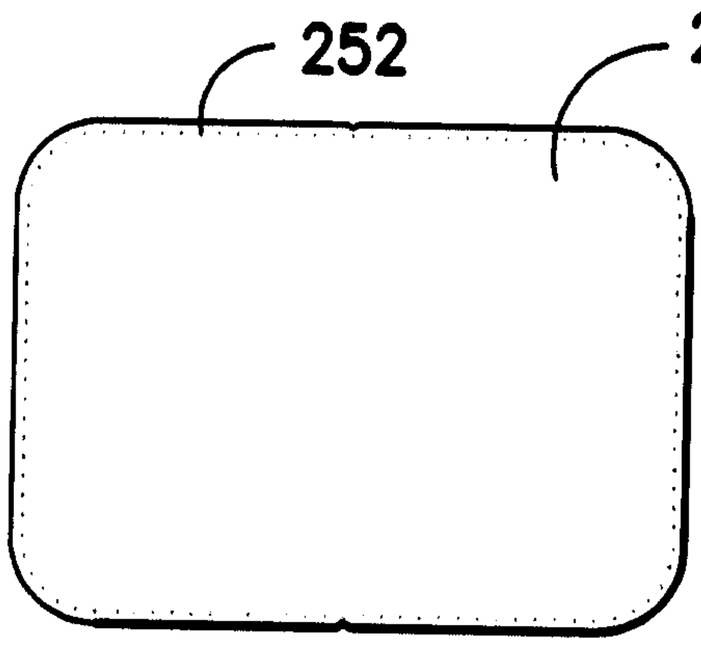

FIG. –23–

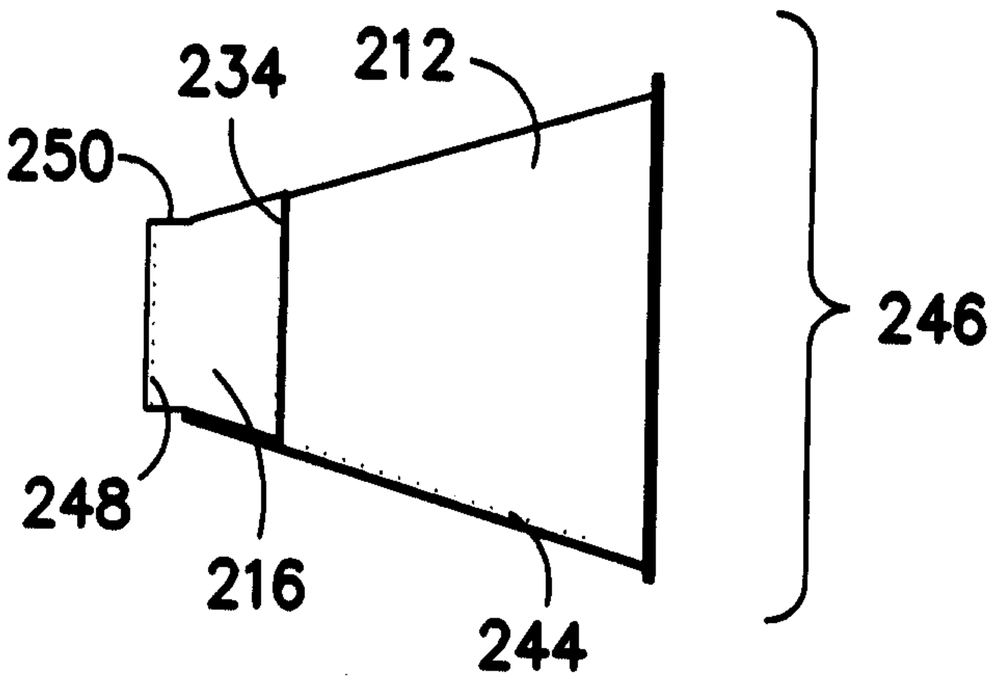

FIG. –24–

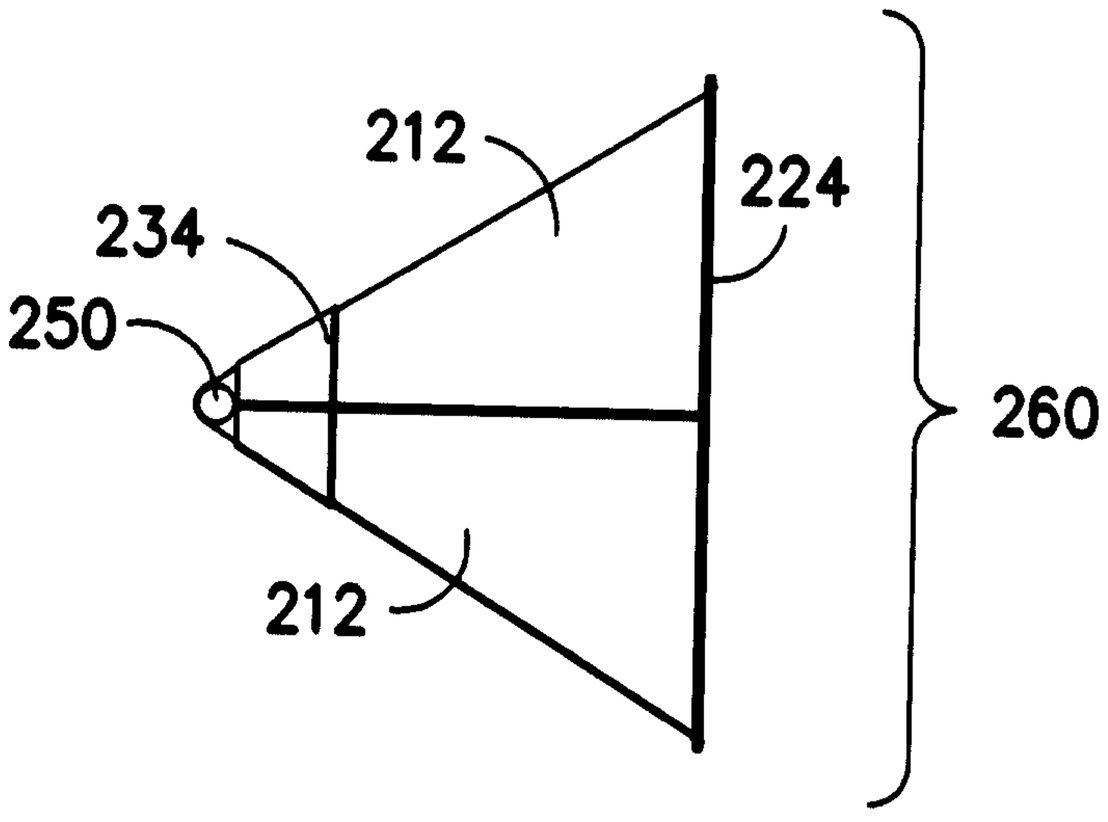

FIG. -25-

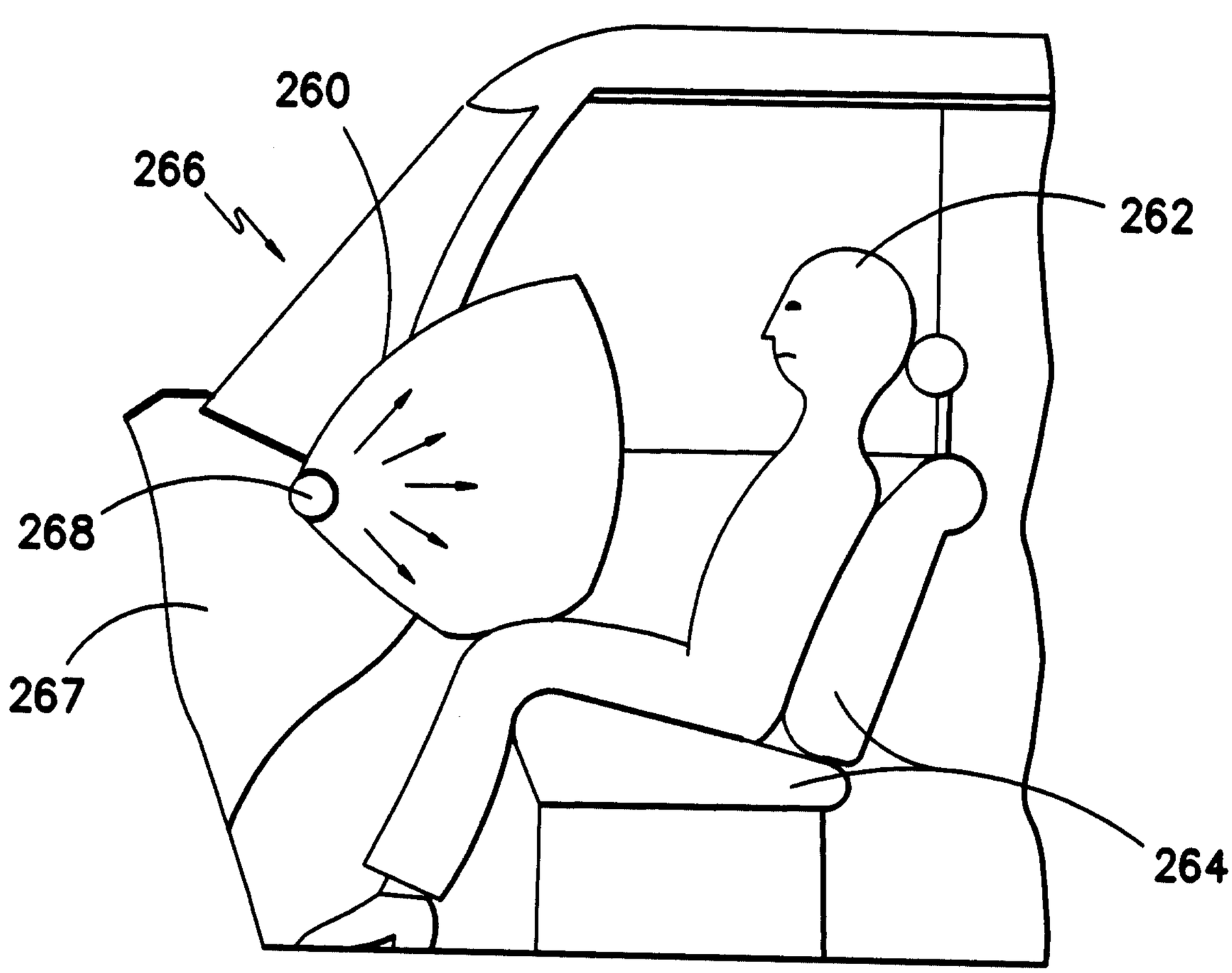

FIG. -26-

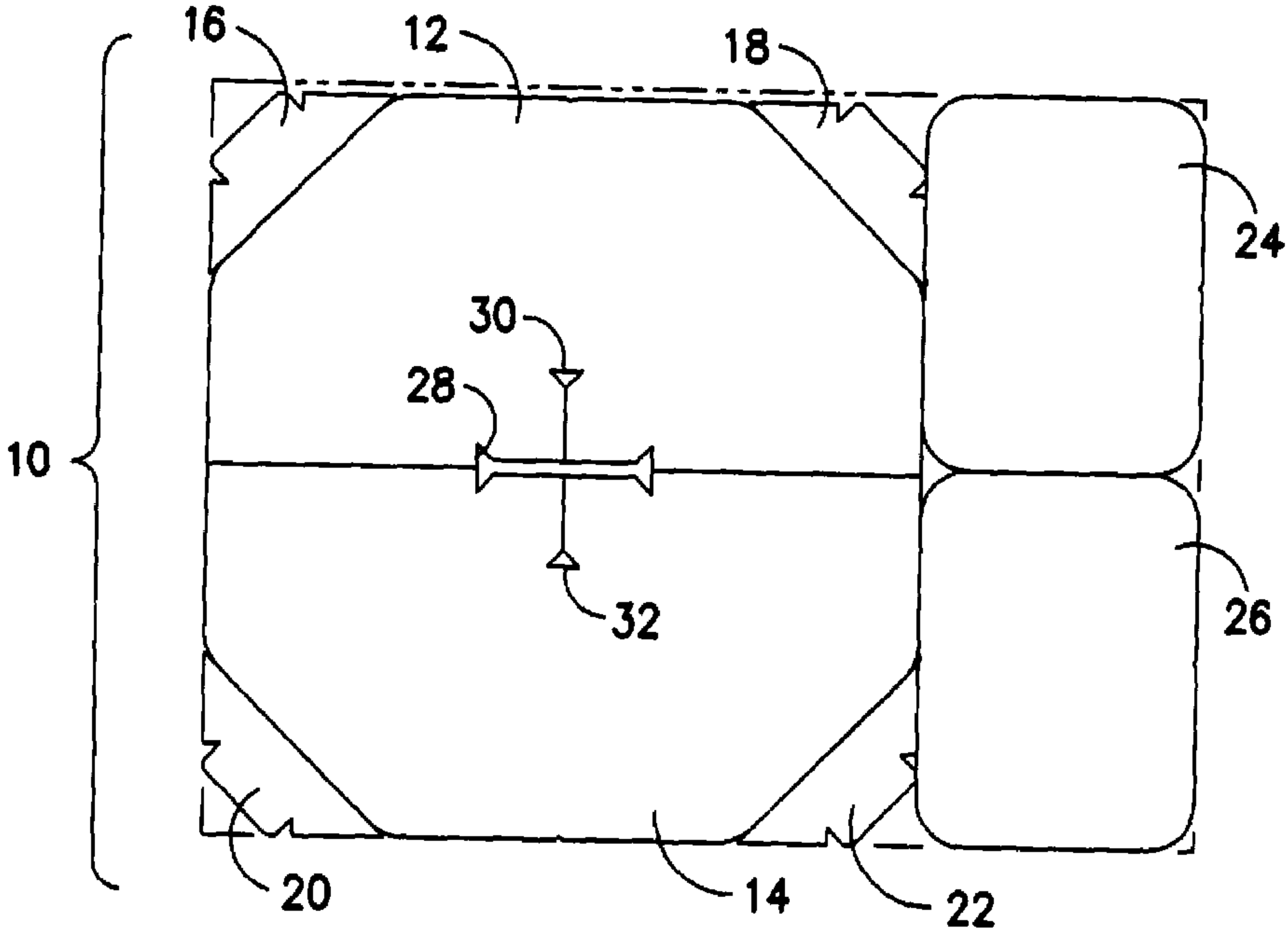
16
12
18
24
30
28
10
32
26
20
14
22