United States Patent [19]

Smith

[11] **Patent Number: Des. 321,802**

[45] **Date of Patent: ** Nov. 26, 1991**

[54] **DRAWER FOR A CASSETTE CABINET OR SIMILAR ARTICLE**

[76] Inventor: **Richard D. Smith,** 1942 W. Artesia Blvd., Torrance, Calif. 90504

[**] Term: **14 Years**

[21] Appl. No.: **697,952**

[22] Filed: **May 8, 1991**

Related U.S. Application Data

[62] Division of Ser. No. 511,016, Apr. 19, 1990, Pat. No. Des. 320,514.

[52] **U.S. Cl.** **D6/510;** D3/35; D6/407

[58] **Field of Search** D6/491, 407, 492, 443, D6/494, 500–510; D19/75, 90; 312/126, 330.1; 206/425

[56] **References Cited**

U.S. PATENT DOCUMENTS

D. 274,205	6/1984	Kates	D6/509
D. 283,959	5/1986	Sun	D6/492
D. 287,907	1/1987	Yu	D6/510 X
4,635,763	1/1987	Omata	312/330.1 X
4,703,982	11/1987	Rock et al.	312/330.1 X
4,850,477	7/1989	Gelardi et al.	206/425 X

Primary Examiner—Bruce W. Dunkins
Assistant Examiner—Janice E. Seeger
Attorney, Agent, or Firm—Irell & Manella

[57] **CLAIM**

The ornamental design for a drawer for a cassette cabinet or similar article, as shown and described.

DESCRIPTION

FIG. **1** is a perspective view of a drawer for a cassette cabinet or similar article, showing my new design;
FIG. **2** is a top plan view;
FIG. **3** is a bottom plan view;
FIG. **4** is a rear elevational view;
FIG. **5** is a side elevational view, the opposite side being a mirror image thereof;
FIG. **6** is a perspective view of a drawer for a cassette cabinet or similar article, showing a second embodiment of my new design;
FIG. **7** is a side elevational view of the second embodiment, the opposite side being a mirror image thereof;
FIG. **8** is a bottom plan view of the second embodiment;
FIG. **9** is a perspective view of a drawer for a cassette or similar article, showing a third embodiment of my new design;
FIG. **10** is a side elevational view of the third embodiment, the opposite side being a mirror image thereof; and
FIG. **11** is a bottom plan view of the third embodiment.

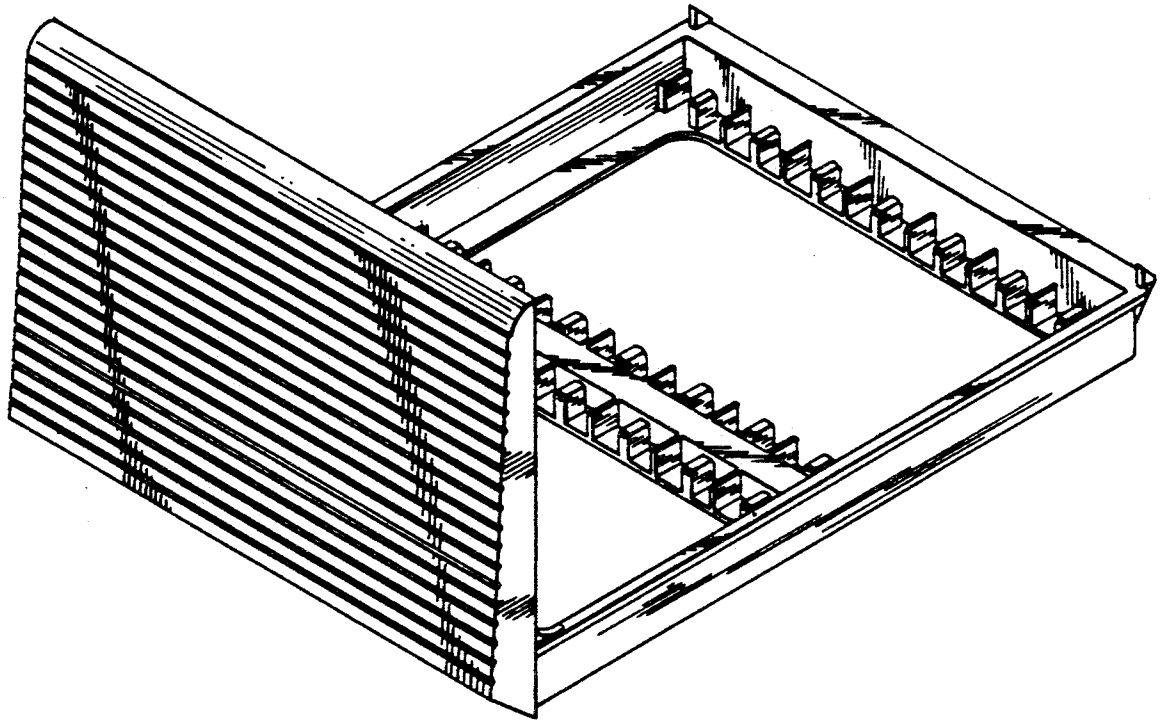

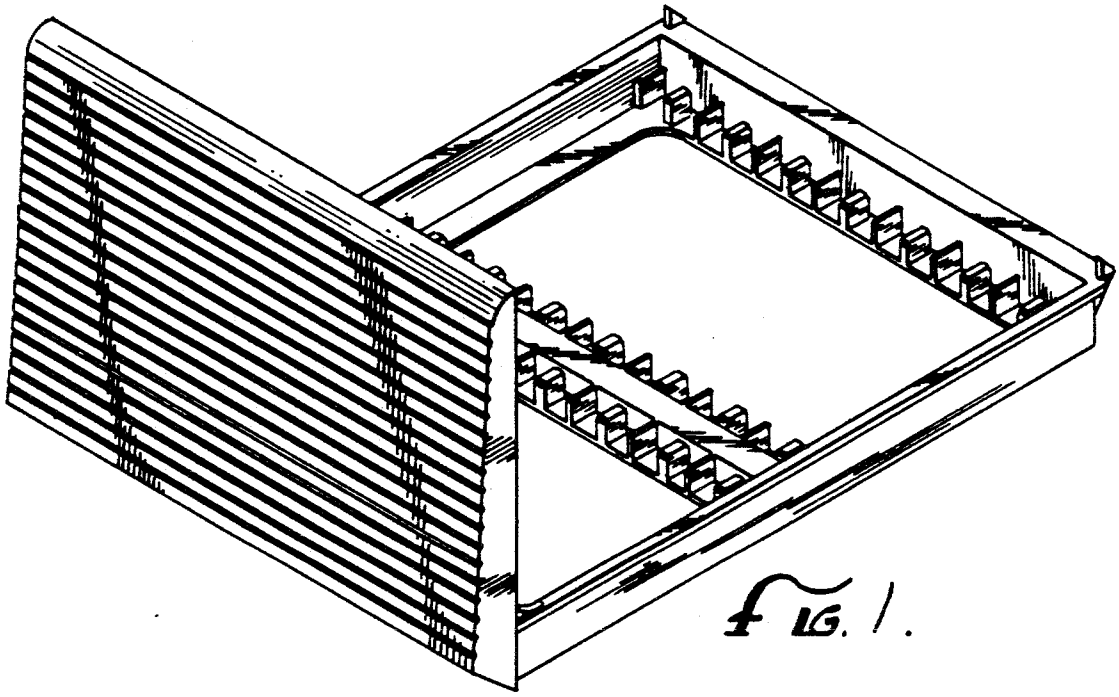

FIG. 1.

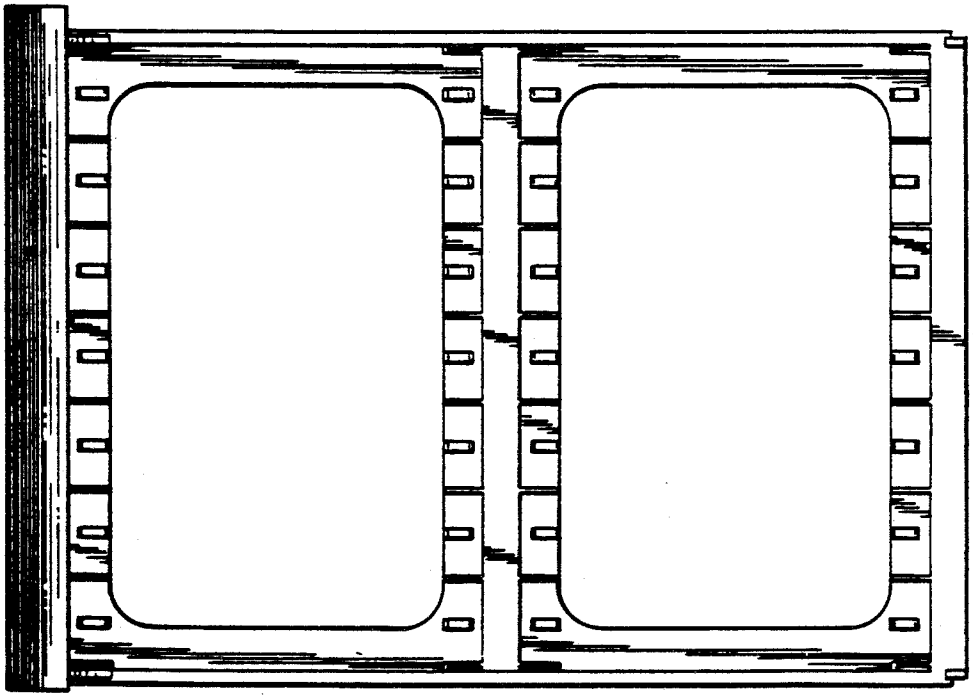

FIG. 2

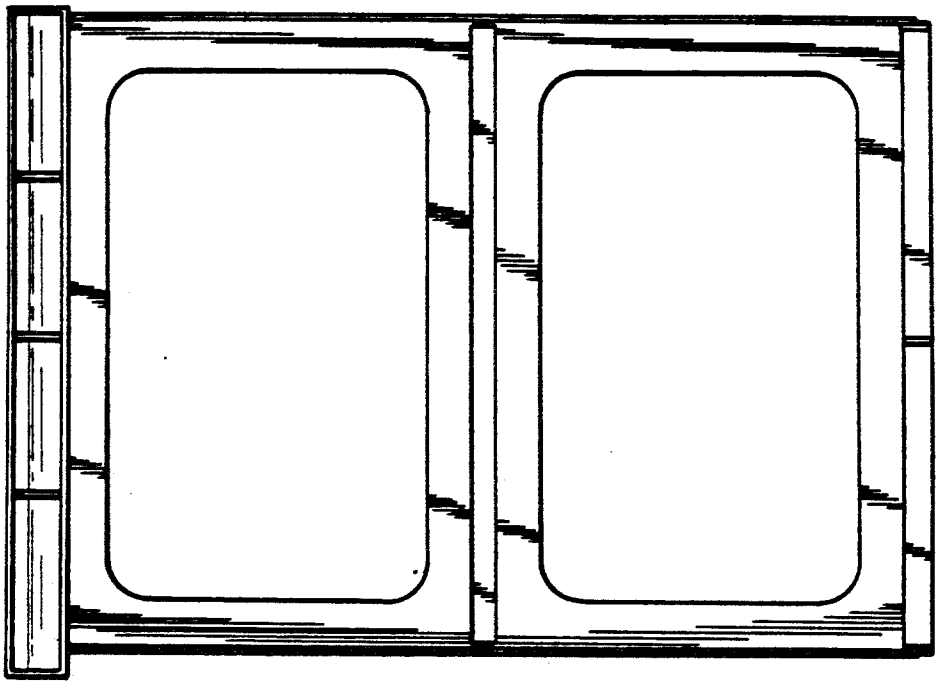

FIG. 3.

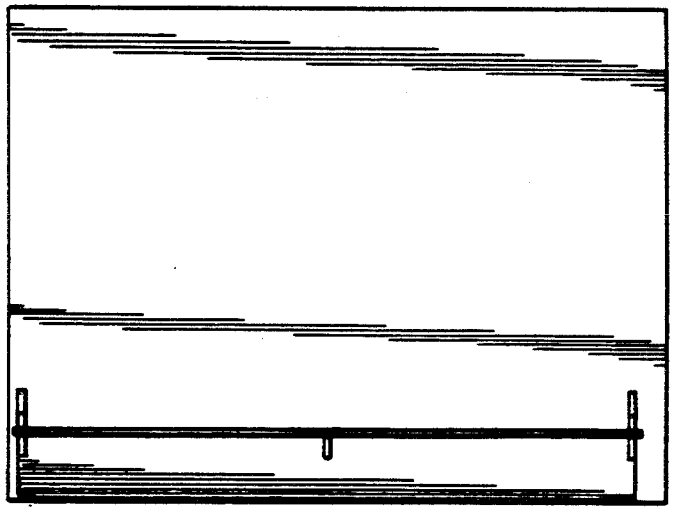

FIG. 4.

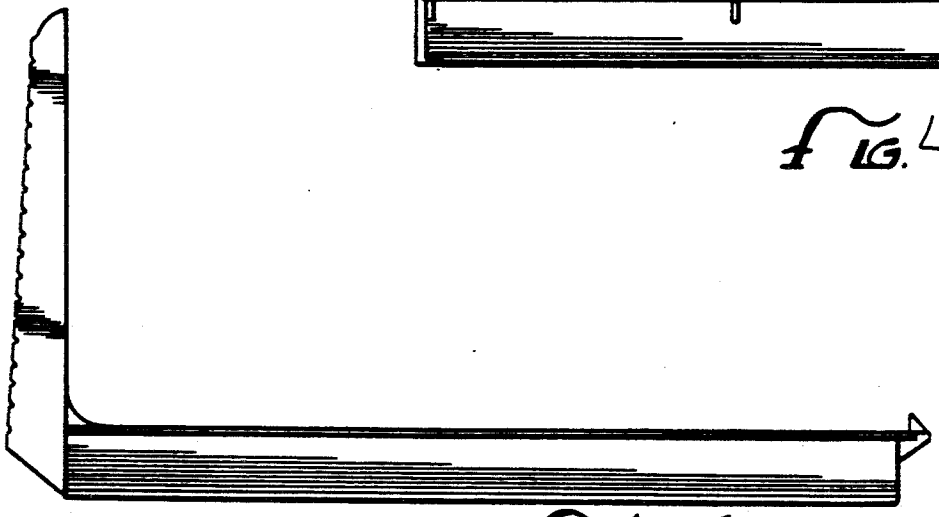

FIG. 5.

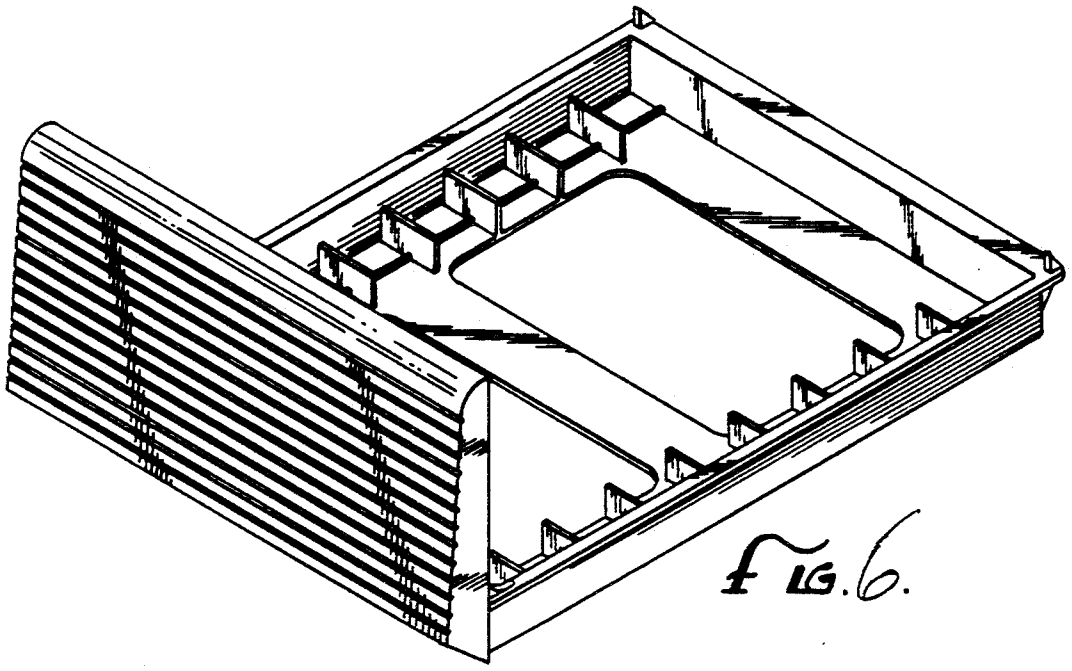

FIG. 6.

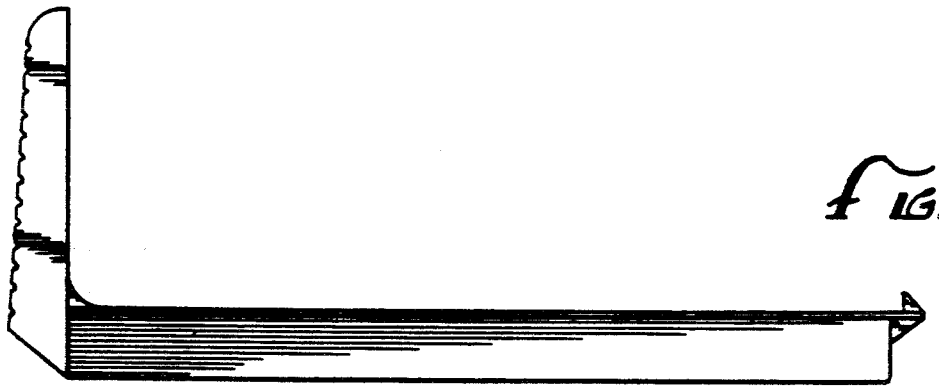

FIG. 7.

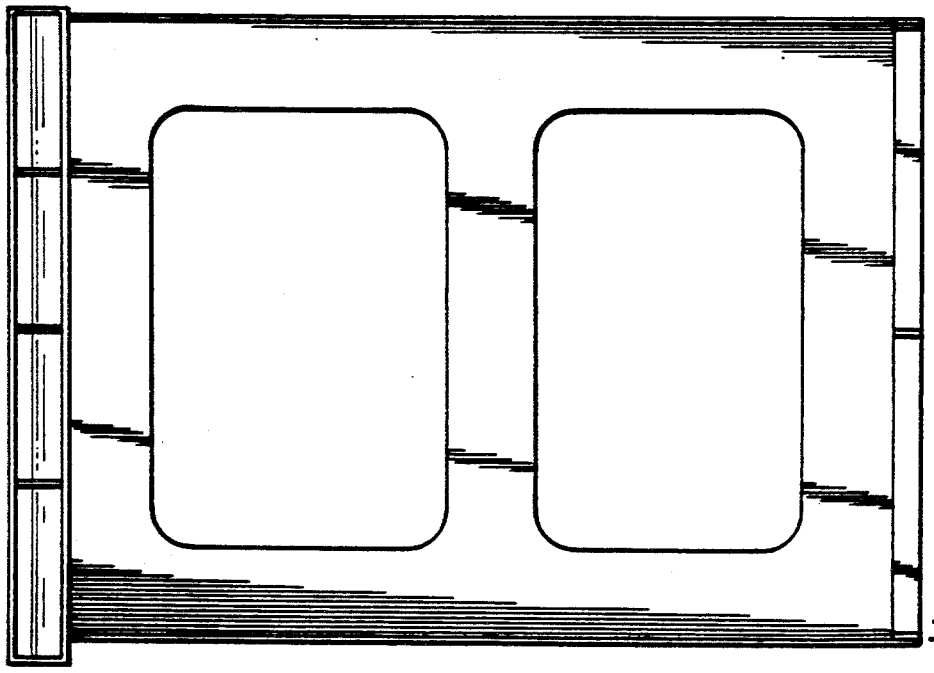

FIG. 8.

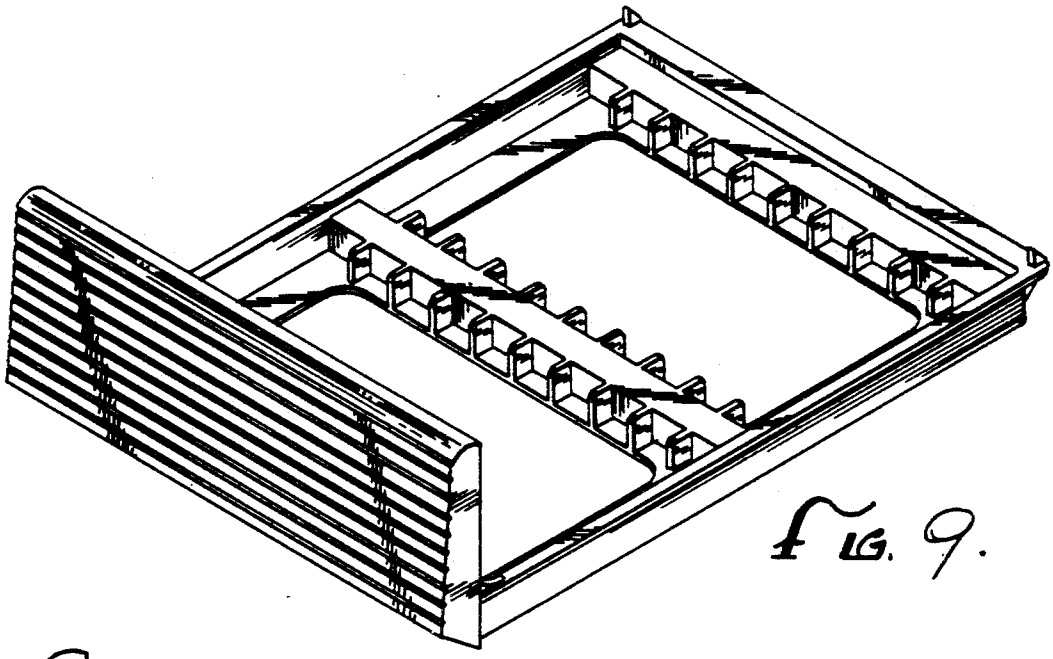

FIG. 9.

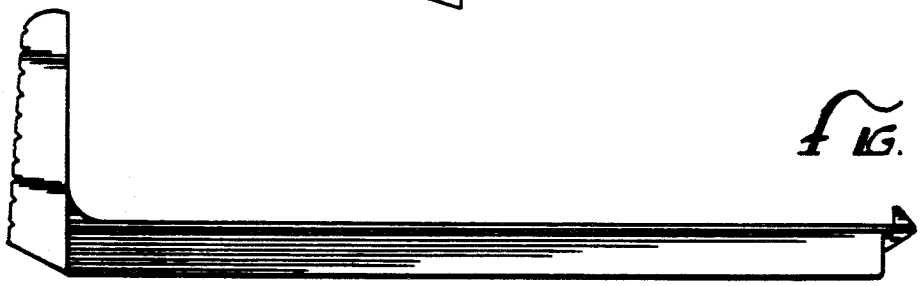

FIG. 10.

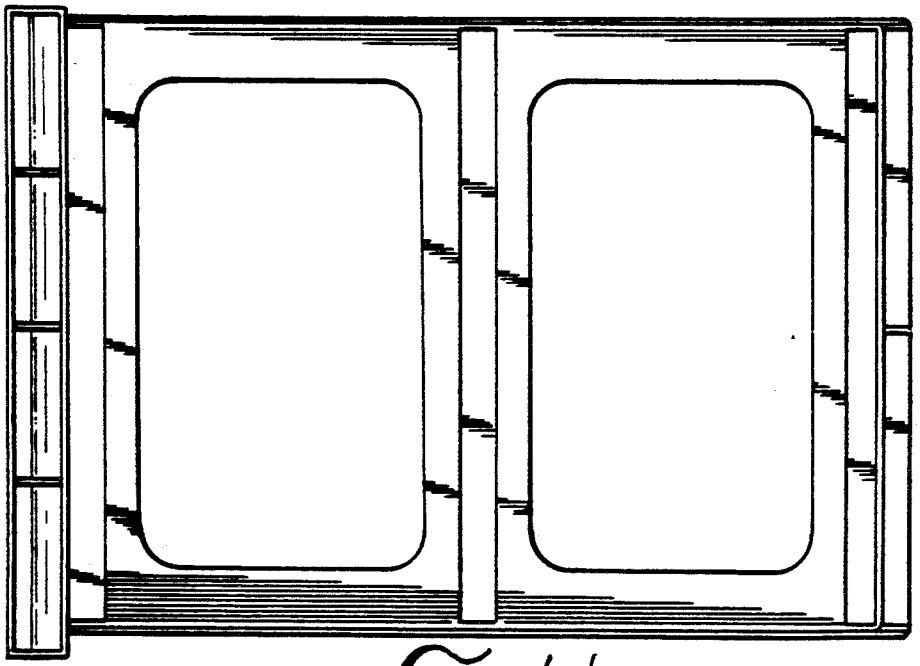

FIG. 11.