Nov. 22, 1966 S. N. MANN ETAL 3,286,663

OVER-BED TABLE

Filed May 26, 1965 2 Sheets-Sheet 1

FIG. 2.

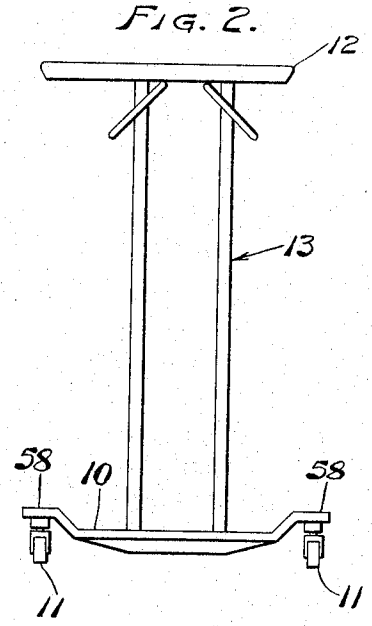

FIG. 1.

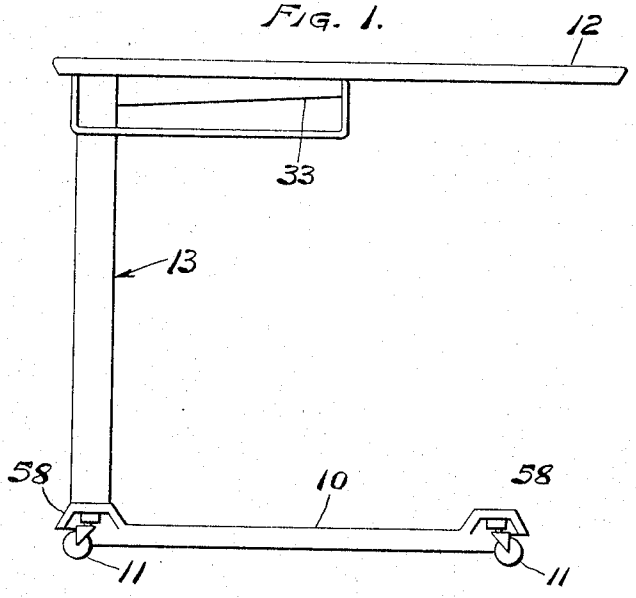

FIG. 5.

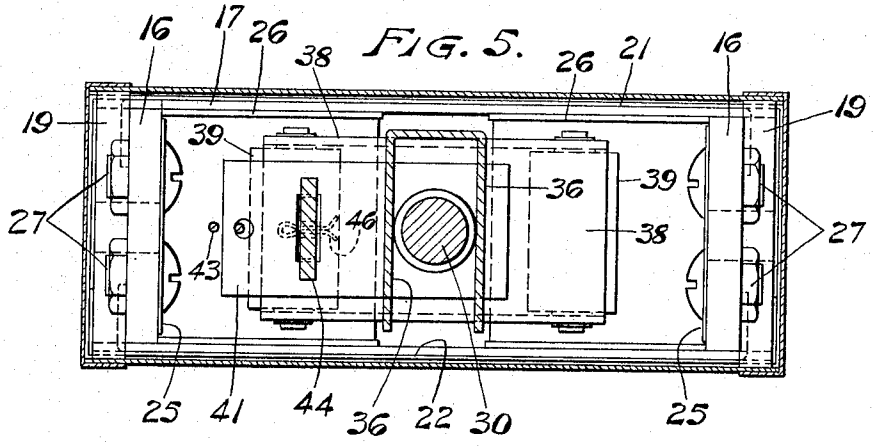

INVENTORS
STUART N. MANN &
WILLIAM GARFIELD STEEL

BY Christel & Bean

ATTORNEYS

Nov. 22, 1966 S. N. MANN ETAL 3,286,663

OVER-BED TABLE

Filed May 26, 1965 2 Sheets-Sheet 2

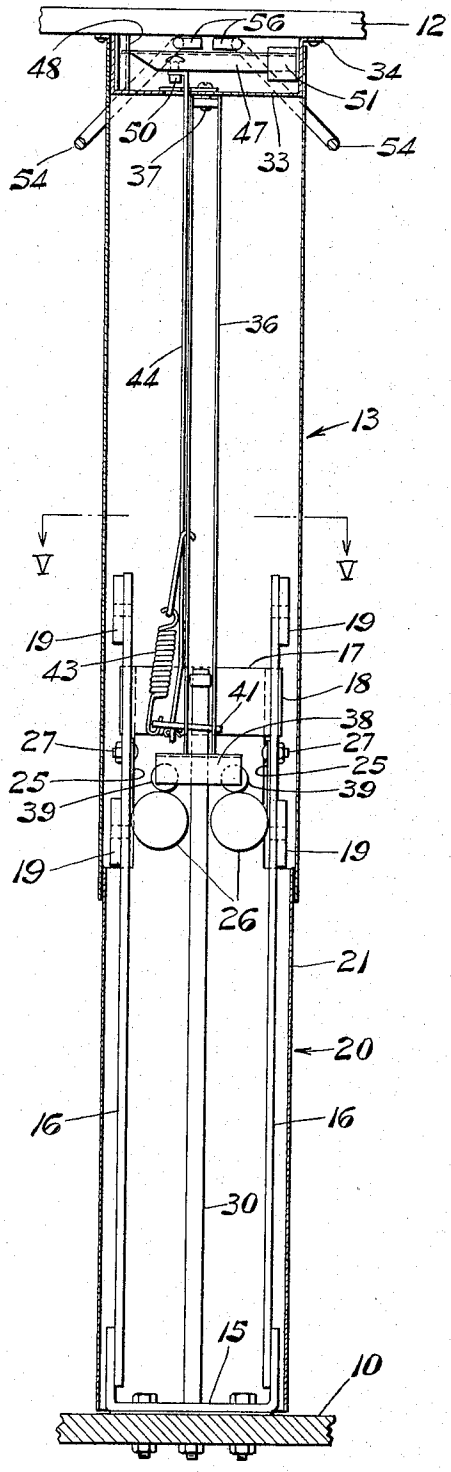

FIG. 3

FIG. 4.

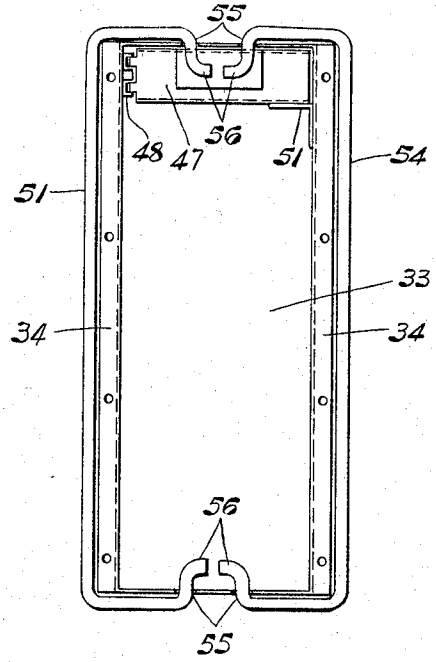

INVENTORS.
STUART N. MANN &
WILLIAM GARFIELD STEEL
BY
Christel & Bean
ATTORNEYS

United States Patent Office

3,286,663
Patented Nov. 22, 1966

3,286,663

OVER-BED TABLE

Stuart N. Mann, Derby, and William Garfield Steel, Tonawanda, N.Y., assignors to The Hard Manufacturing Co., Buffalo, N.Y.

Filed May 26, 1965, Ser. No. 458,859
2 Claims. (Cl. 108—144)

This invention relates to over-bed tables such as are commonly used in conjunction with hospital beds and for analogous purposes.

Over-bed tables sometimes referred to in the art as cantilever tables, generally comprise a base of substantial length mounted upon casters and a table top generally overlying the base. A column extends vertically between the base and the table top at one end of the base and a corresponding end of the table top so that the table may be rolled up to the side of the bed with the base extending beneath the bed and the table top extending over the surface of the bed and over an occupant of the bed.

It is desirable that over-bed tables of this type be vertically adjustable to dispose the table top at various heights to suit the convenience of the user and other variable factors. The present invention relates particularly to the construction of the adjustable column upon which the table top is supported and more particularly to the means for adjusting the same and for locking the table top in desired adjusted position.

The over-bed table construction of the present invention provides novel column design and arrangement whereby relative vertical movement incident to table top adjustment is accurately and smoothly guided by anti-friction rollers and also a novel counterbalance arrangement which provides uniform counterbalance forces throughout the normal range of vertical adjustment and a counterbalance force which is laterally balanced. Furthermore, the means for locking the table top in various positions is such that the table top position is infinitely adjustable throughout the effective range by means housed within the telescoping column members whereby the lower fixed column and the upper movable column telescope freely and fully and the exposed portions thereof are fully encased in all positions of vertical adjustment.

An important object of the present invention is attained by providing manual means for releasing the height adjustment locking means which is quickly and conveniently accessible from virtually any position about the table. This is important so that a nurse or attendant or the occupant of the bed can release the height adjustment from any position. Moreover release is automatically effected when, through inadvertence, the bed is raised upwardly while the table top is in an interfering position thereover, so that the bed then carries the table top upwardly therewith.

Due to the arrangement of the release means this automatic release will be properly effected despite variations in the position of the obstruction on the bed which causes the release, as when a patient's limb extends beneath the table top in various locations on the bed.

While a single specific embodiment of the principles of the present invention is illustrated in the accompanying drawing and described in detail in the following specification it is to be understood that such embodiment is by way of example only and that various mechanical

modifications may be made without departing from the spirit of the invention, the scope of which is limited only as defined in the appended claims.

In the drawings:

FIG. 1 is a general side elevational view of one form of the over-bed table of the present invention;

FIG. 2 is an end elevational view thereof, viewed from the left-hand side of FIG. 1;

FIG. 3 is an elevational view of the upright support portion of the structure shown in FIGS. 1 and 2 viewed from the right of FIG. 1, on an enlarged scale, and with portions of the casing broken away for added illustration;

FIG. 4 is a top plan view of the structure of FIG. 3 but with the table top element removed; and

FIG. 5 is a horizontal cross sectional view taken approximately on the line V—V of FIG. 3.

Like characters of reference denote like parts throughout the several figures of the drawings and referring particularly to FIGS. 1 and 2, the numeral **10** designates a base member having casters **11** at its corners and the numeral **12** designates a table top. The latter is supported upon the base **10** by a vertically adjustable post or column structure designated generally by the numeral **13**.

As is conventional, the column **13** is located at one end of the base **10** and the corresponding end of the overlying table top **12** whereby the apparatus may be moved up to a bed with the table top projecting over the bed area. The vertically adjustable column structure **13** comprises a lower portion fixed to and extending upwardly from base **10** and an upper portion fixed to and depending from table top **12** and adapted to telescope over the lower portion.

Referring first to such lower portion of column **13**, a U-shaped bracket **15** is bolted directly to base **10** and a pair of rigid bars **16** are fixed to bracket **15** and extend upwardly therefrom as clearly shown in FIG. 3. A pair of strap members **17** having flanged ends as at **18** are fixed across the upper ends of bars **17** to rigidify the lower column structure. A pair of vertically spaced anti-friction rollers **19** is fixed to each of the upright bars **16** to guide the upper telescoping portion of column **13** for vertical movement in a manner which will presently appear.

The portion of the lower fixed column structure which is exposed when the upper column structure is raised to maximum height is enclosed by a rectangular upright casing **20** consisting of a three sided sheet metal member **21** and a plate **22** which encloses the fourth side of the column structure. The member **21** has longitudinal edge flanges which engage over plate **22** to form a casing of box section. The upper end of plate **22** and the upper medial wall portion of member **22** are fixed against the outside surfaces of strap members **17**.

This completes the structure of the lower column excepting for a pair of counterbalancing spring devices **25** which comprise elongated relatively thin spring steel strips which are closely wound on spools **26** and are attached at their upper ends to the inner surfaces of the upright bars **16** as by bolt connections designated **27** in FIG. 3. An adjustment locking rod **30** is fixed at its lower end to the bracket **15** and base **10** and extends upwardly between the spring spools **26** for cooperation with vertical adjustment locking means which will presently be described.

The upper structure which is attached to and depends from the table top **12** includes a horizontally extending

housing member **33** in the shape of a rectangular pan having flanges **34** along its opposite longitudinal upper edges for attachment to the under side of table top **12**. A channel member **36** is fixed at its upper end to the under side of housing member **33** as shown at **37** in FIG. 3 and extends downwardly over the upper end of locking rod **30**.

Fixed to the lower end of channel member **36** is a downwardly facing channel shaped bearing member **38** which rotatably supports a pair of rollers **39** which are disposed to directly overlie the springs **25** which are wound upon spools **26**. Thus downward movement of table top **12** relative to the base structure projects the rollers **39** downwardly against the spring devices **25** and causes a downward unrolling movement of the spools **26** to unroll the spring devices **25** against the inner surfaces of upright members **16**. This provides an ideal counterbalance for the weight to the table top and contents wherein the counterbalancing resistance is substantially constant in various positions of vertical adjustment of the table top **12** and wherein the counterbalance forces are uniformly applied at opposite sides of the vertical centerline of the column structure.

The means provided for locking the table top **12** in various positions of height adjustment will now be described. This is accomplished by, in effect, locking channel **36** and locking rod **30** with respect to each other in various relative lengthwise positions. A locking plate **41** passes loosely through slots in the opposite flanges of channel member **36** and is provided with a hole through which the rod **30** passes. When locking plate **41** is substantially horizontal the rod **30** will pass freely through the hole in plate **41** but when the latter is canted as shown in FIG. 3 it binds upon rod **30** and, since plate **41** is constrained by the slots in channel member **36** through which it passes, the locking rod **30** and channel member **36** are effectively locked to each other.

Locking plate **41** is normally held in its canted locking position by an extension coil spring **43** which engages between a laterally projecting end of plate **41** and an aperture in one of the side flanges of channel member **36**. For releasing the locking plate **41** for vertical adjustment of table top **12** a release rod **44** extends vertically alongside of channel member **36** and connects at its lower end with locking plate **41**. Rod **44** has a reduced lower end portion which passes through a slot in plate **41** and a cotter pin **45** engages through rod **44** beneath locking plate **41**.

The upper end of rod **44** extends through the bottom of housing member **33** and into the interior thereof as shown in FIG. 3. Manual release means are provided for pressing downwardly upon rod **44** to release the height locking adjustment. A release lever **47** in the form of an inverted channel has ears projecting from its left-hand end as viewed in FIG. 3 which extend into slots in an anchor member **48** which is fixed within housing **33**, thus pivoting lever **47** for up and down movement. A medial portion of lever **47** rests upon a screw adjustment **50** which is carried by a flange at the upper end of release rod **44**. The right-hand end of lever **47**, as viewed in FIGS. 3 and 4, is retained against lateral displacement in housing **33** by a flange **51**.

A pair of wire loop or bail members **54** have bearing portions designated **55** in FIG. 4 which bear in notches in the upper edges of housing member **33**, being retained therein by securement of the housing member against the under side of table top **12**. The extremities of the bail members **54** are designated **56** and the bail members are normally retained in the position illustrated in FIG. 3, the weight of the medial portions of the bail members causing the extremities **56** to abut the under side of table top **12**. FIG. 3 illustrates the parts in the positions they occupy when the column structure is locked in a particular position of height adjustment.

When height adjustment is to be effected, one merely lifts the medial portion of one of the bail members **55**, whichever happens to be handier, and this rocks an extremity **56** of the particular bail member downwardly against lever **47** which moves release rod **44** downwardly against the resistance of spring **43**, thus moving the locking plate **41** to horizontal position to release the same from rod **30** and permit free up and down movement of channel member **36** and table top **12**.

It will be noted that the bail members extend substantially entirely about the housing **33** so that they are easily accessible from any position. More importantly, the disposition and extent of the bail members is such that if the bed of a patient or other user is raised and the table top **12** is inadvertently left in an overlying position with respect to the bed, upper portions of the bed or the patient will move upwardly against some portion of one of the bail members, thus releasing the table top locking means, whereupon the table top will be moved upwardly with the bed.

It will be noted that base **10** has a central portion which lies close to the floor and raised corners **58** for receiving the casters **11**. Thus the table may be used by a patient sitting alongside the same without undue discomfort, since the user may place his feet on base **10** because of its low position. Also, the lowness of the main portion of base **10** permits the table to be moved close under the wheels of a wheel chair.

We claim:

1. In an over-bed table, a horizontally extending base and a table top generally overlying said base, column means extending vertically between said base and said table top adjacent to a corresponding edge of each, said column means comprising a first hollow column member fixed to and extending upwardly from said base and a second hollow column member depending from said table top and telescoping over said first hollow column member, said members being relatively vertically movable for adjusting the height of the table top, said first column member including an upwardly extending locking member and said second column portion having a locking member therein extending downwardly into said first column member, means acting between said locking members for selectively locking them against relative vertical movement, and an upright release rod engageable at its lower end with said last mentioned means and extending upwardly within said second column member to a point beneath said table top, means at the under side of said table top movable to reciprocate said release rod to free said locking means, a pair of spiral springs attached at the outer end of each to opposite sides of the interior of said first column member and adapted to unroll downwardly, a pair of laterally spaced rollers at the lower end of said downwardly extending locking member for anti-friction engagement against the peripheries of said spiral springs to unroll the same and produce balanced forces at opposite sides of said column means to counterbalance said table top when said locking means is released.

2. In an over-bed table, a horizontally extending base and a table top generally overlying said base, column means extending vertically between said base and said table top adjacent to a corresponding edge of each, said column means comprising a first hollow column member fixed to and extending upwardly from said base and a second hollow column member depending from said table top and telescoping over said first hollow column member, said members being relatively vertically movable for adjusting the height of the table top, said first column member including an upwardly extending locking member and said second column portion having a locking member therein extending downwardly into said first column member, means acting between said locking members for selectively locking them against relative vertical movement, and an upright release rod engage-

able at its lower end with said last mentioned means and extending upwardly within said second column member to a point beneath said table top, means at the under side of said table top movable to reciprocate said release rod to free said locking means, a spiral spring attached at its outer end to the interior of said first column member and adapted to unroll downwardly thereagainst, a roller at the lower end of said downwardly extending locking member for antifriction engagement against the periphery of said spiral spring to unroll the same to counterbalance said table top when said locking means is released.

References Cited by the Examiner

UNITED STATES PATENTS

744,613	11/1903	Reimold	108—147
811,278	1/1906	Coy	108—146
2,051,530	8/1936	Parmley	5—86
2,685,487	8/1954	Woller	108—146
3,188,986	6/1965	La Vigne	108—146 X
3,194,187	7/1965	Linder et al.	108—146

JAMES T. McCALL, *Primary Examiner.*

FRANK B. SHERRY, *Examiner.*