(12) PATENT APPLICATION PUBLICATION
(19) INDIA
(22) Date of filing of Application :17/08/2021

(21) Application No.202121037188 A
(43) Publication Date : 24/09/2021

(54) Title of the invention : SMART TRAFFIC SIGNAL MANAGEMENT SYSTEM FOR ROADWAYS

(51) International classification	:G08G0001080000, G06N0003040000, G08G0001015000, G08G0001040000, G06T0007000000
(86) International Application No Filing Date	:NA :NA
(87) International Publication No	: NA
(61) Patent of Addition to Application Number Filing Date	:NA :NA
(62) Divisional to Application Number Filing Date	:NA :NA

(71)**Name of Applicant :**
1)DEEPRAJ CHOWDHURY
Address of Applicant :DEPT OF ELECTRONICS AND COMMUNICATION ENGINEERING, IIIT NAYA RAIPUR PLOT NO. 7, SECTOR 24, NEAR PURKHOTI MUKTANGAN, ATAL NAGAR, CHHATTISGARH- 493661 ---------- ----------
2)MAIFUZ ALI
3)DEEPIKA GUPTA
Name of Applicant : NA
Address of Applicant : NA
(72)**Name of Inventor :**
1)DEEPRAJ CHOWDHURY
Address of Applicant :DEPT OF ELECTRONICS AND COMMUNICATION ENGINEERING, IIIT NAYA RAIPUR PLOT NO. 7, SECTOR 24, NEAR PURKHOTI MUKTANGAN, ATAL NAGAR, CHHATTISGARH- 493661 ---------- ----------
2)AJOY DEY
Address of Applicant :DEPT OF ELECTRONICS AND TELECOMMUNICATIONS JADAVPUR UNIVERSITY KOLKATA - 700032 ---------- ----------
3)DEBARATI GHOSH
Address of Applicant :UNIVERSITY OF KALYANI, KALYANI, NADIA 741235 ---------- ----------
4)MAIFUZ ALI
Address of Applicant :DEPT OF ELECTRONICS AND COMMUNICATION ENGINEERING, IIIT NAYA RAIPUR PLOT NO. 7, SECTOR 24, NEAR PURKHOTI MUKTANGAN, ATAL NAGAR, CHHATTISGARH- 493661 ---------- ----------
5)DEEPIKA GUPTA
Address of Applicant :DEPT OF ELECTRONICS AND COMMUNICATION ENGINEERING, IIIT NAYA RAIPUR PLOT NO. 7, SECTOR 24, NEAR PURKHOTI MUKTANGAN, ATAL NAGAR, CHHATTISGARH- 493661 ---------- ----------

(57) Abstract :
SMART TRAFFIC SIGNAL MANAGEMENT SYSTEM FOR ROADWAYS The present invention relates a system for managing traffic signal of roadways, comprising: at least one sensor node (200) installed in each defined direction of a signal point (100); a central server (300) having an artificial intelligence (AI) tool (400); and at least one timer control circuit (500). The sensor node (200) includes camera (202) and microcontroller (204) which are configured to derive traffic information including type and number of vehicles present in each defined direction of the signal point (100). The central server (300) is configured to process the derived traffic information for managing/controlling signal (600) timing at the signal point (100) by using the timer control circuit (500). The AI tool (400) includes a first neural network trained model (402) and a second neural network trained model (404). The AI tool is able to detect emergency vehicles (VE) and to give them green signal on first priority basis. Further, the AI tool is configured with a time splitting module to split a threshold time limit of green signaling into multiple time slots allotted for different directions as per a ratio of number of vehicles present in the different directions, thus minimizing the overall waiting time of the vehicles in the traffic signal. Fig. 1

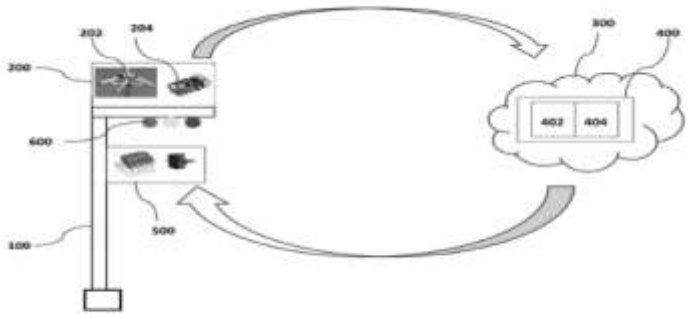

Fig. 1

No. of Pages : 22 No. of Claims : 8

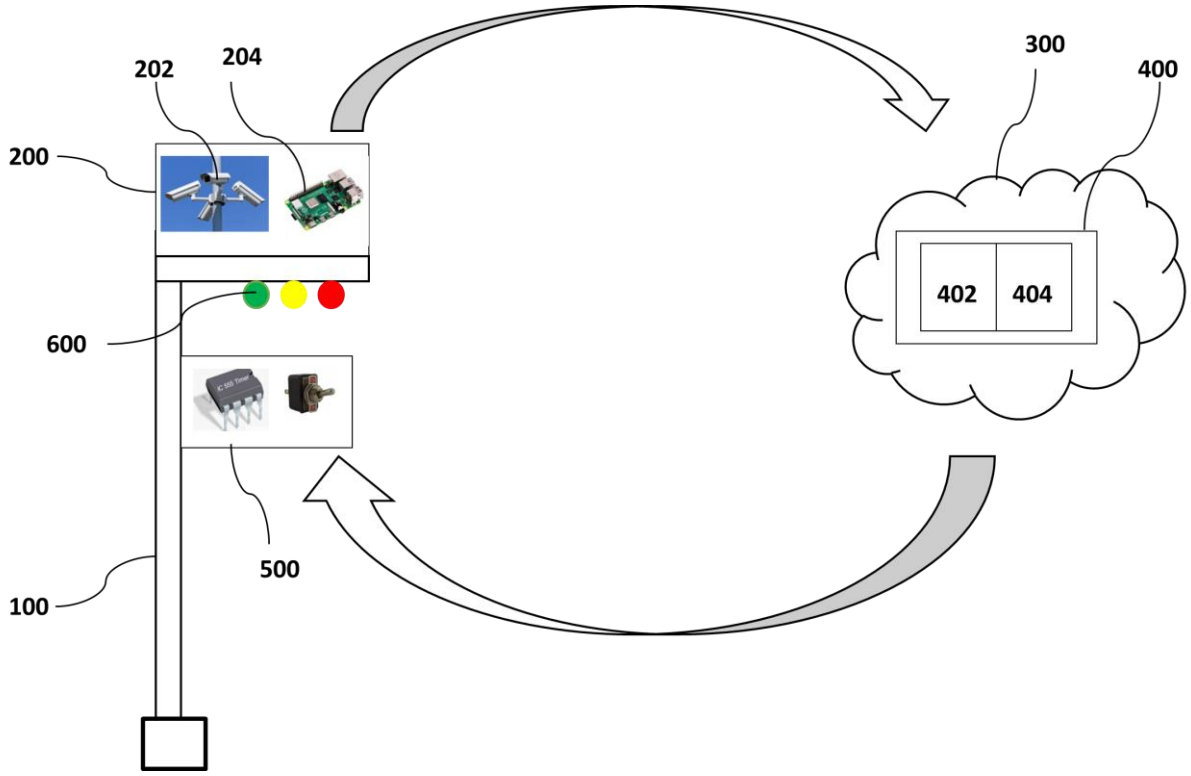

Fig. 1

SUMAN KUMAR DAS
(IN/PA 3260)
[Agent for the Applicant(s)]
Digitally Signed

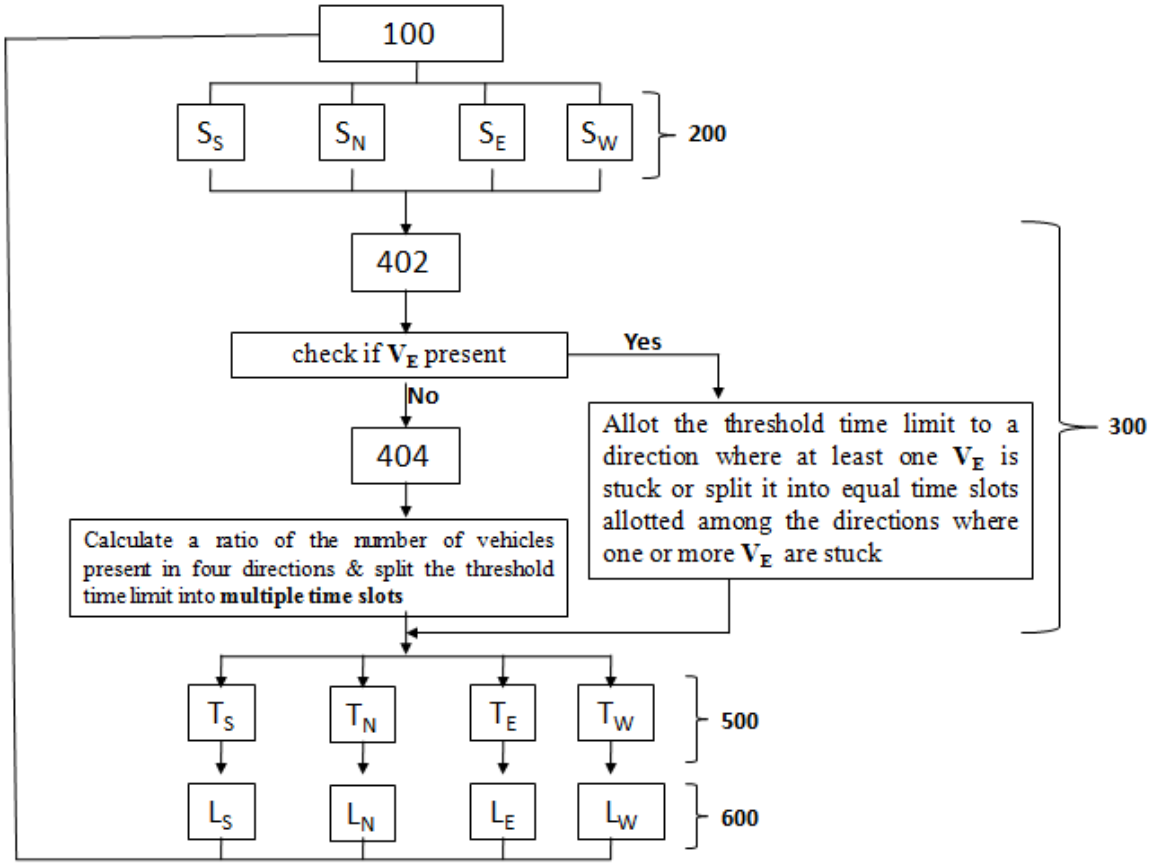

Fig. 2

SUMAN KUMAR DAS
(IN/PA 3260)
[Agent for the Applicant(s)]
Digitally Signed

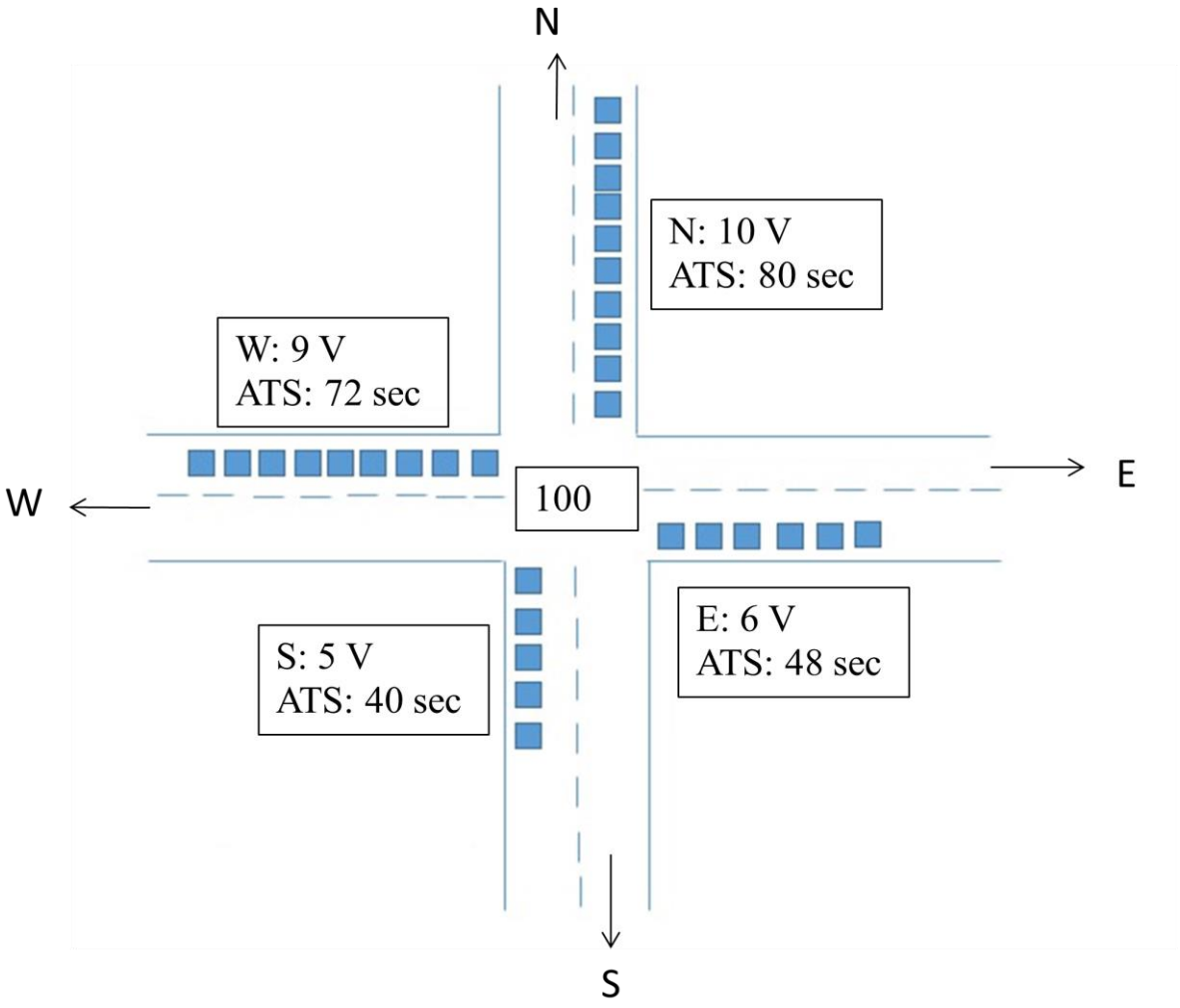

Fig. 3

SUMAN KUMAR DAS
(IN/PA 3260)
[Agent for the Applicant(s)]
Digitally Signed

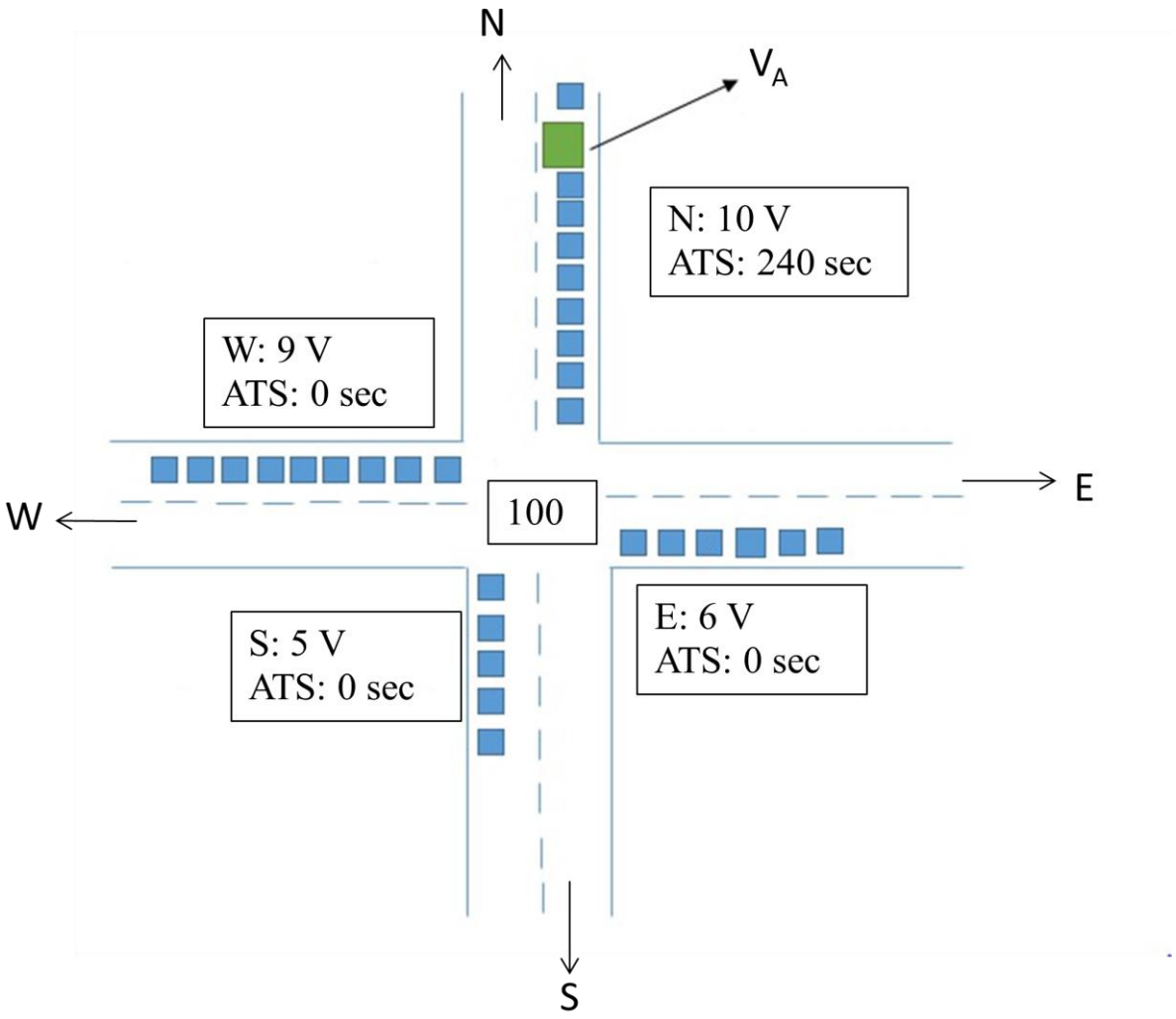

Fig. 4

SUMAN KUMAR DAS
(IN/PA 3260)
[Agent for the Applicant(s)]
Digitally Signed

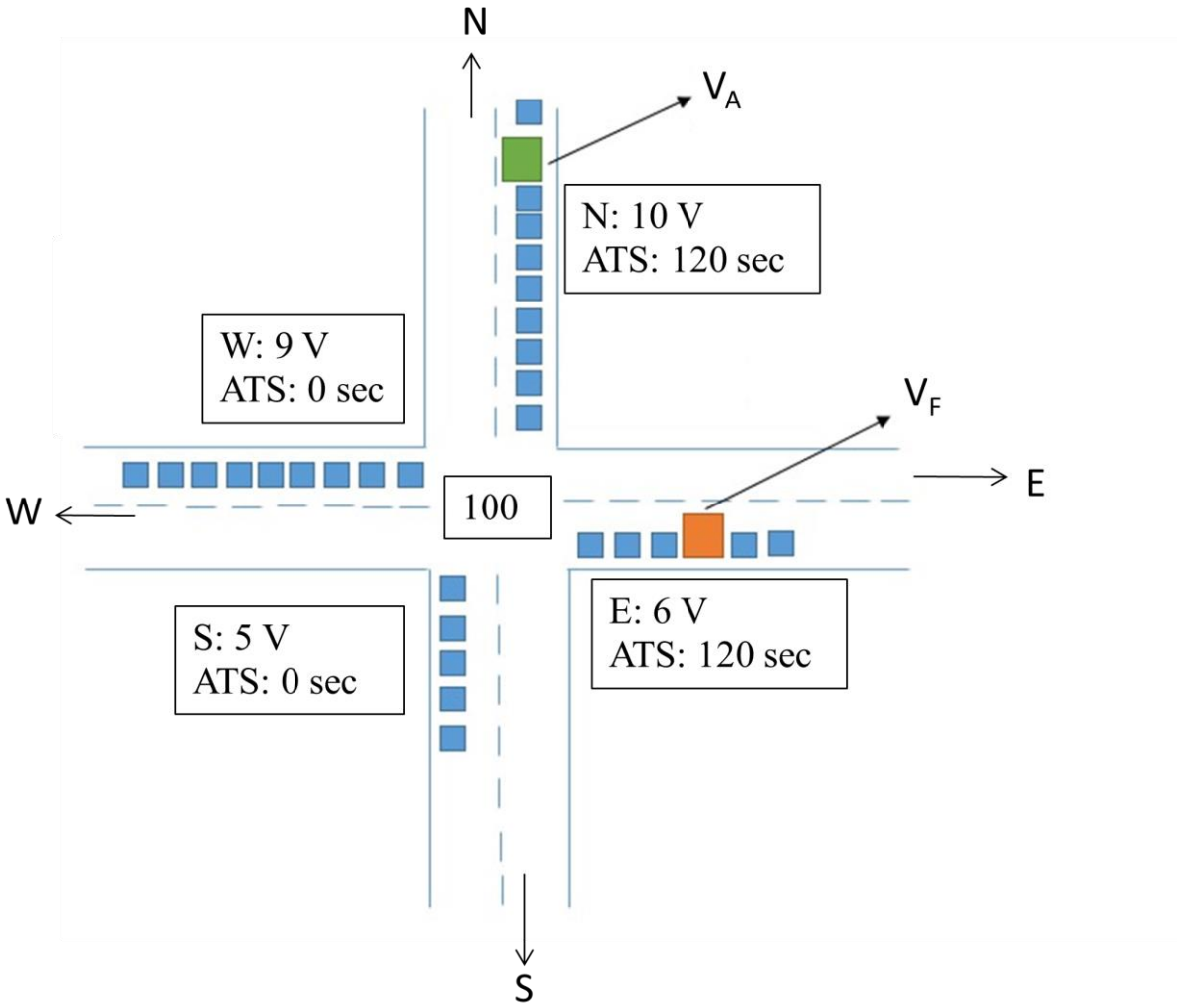

Fig. 5

SUMAN KUMAR DAS
(IN/PA 3260)
[Agent for the Applicant(s)]
Digitally Signed

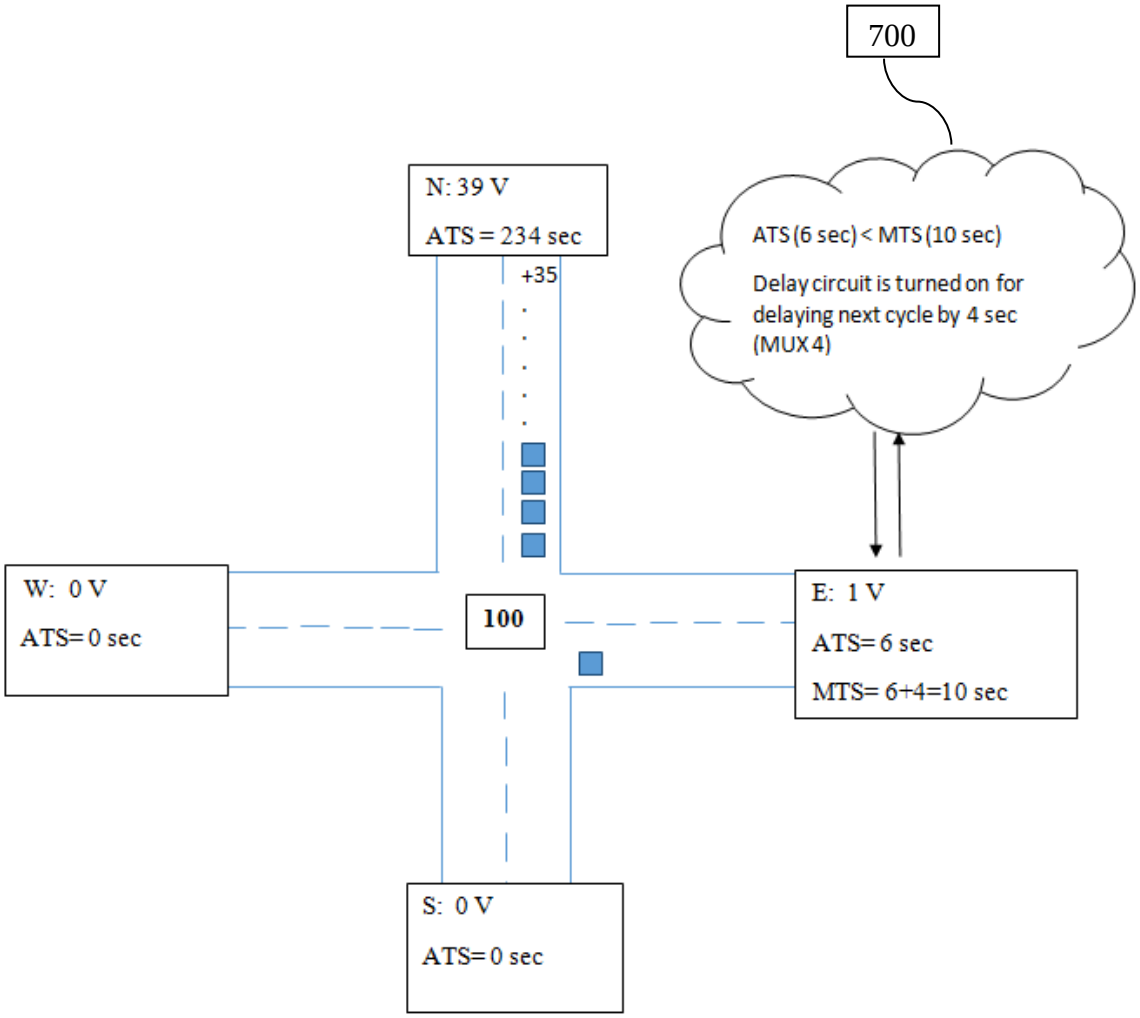

Fig. 6

SUMAN KUMAR DAS
(IN/PA 3260)
[Agent for the Applicant(s)]
Digitally Signed