(No Model.)

J. M. LONG.

PUNCHING MACHINE WORK HOLDER.

No. 456,578. Patented July 28, 1891.

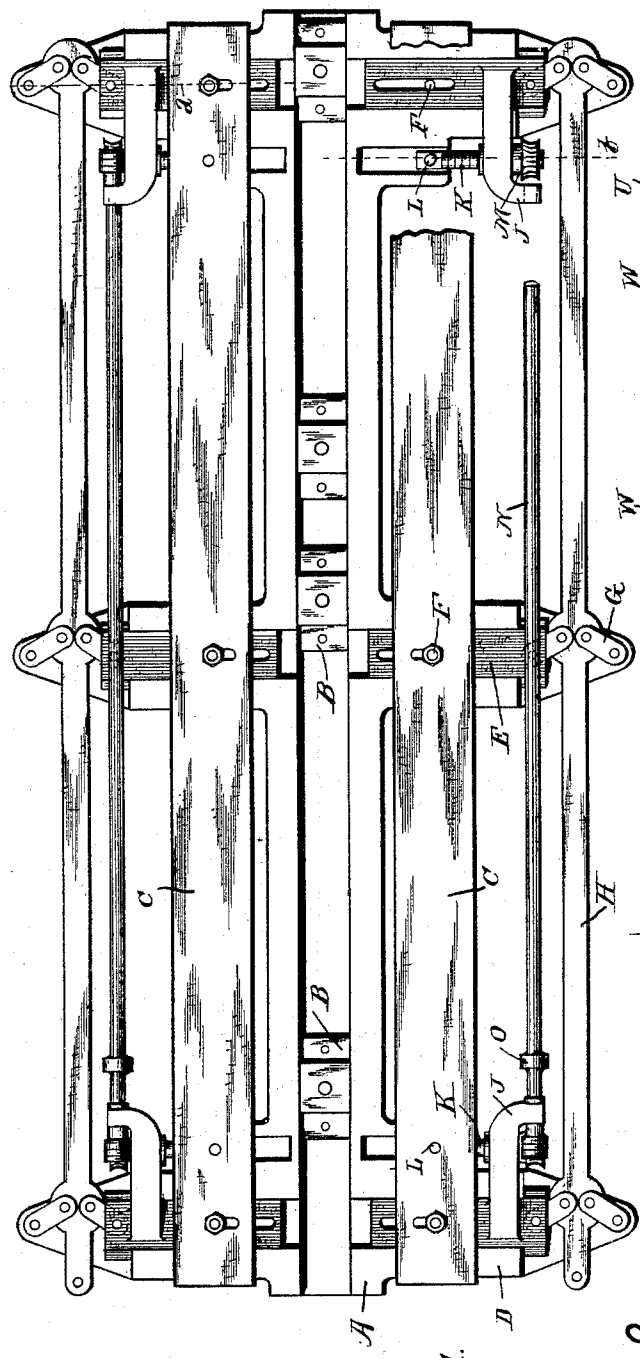

Fig. 1.

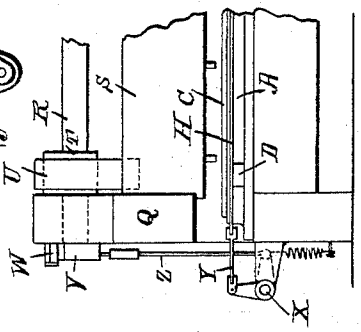

Fig. 4.

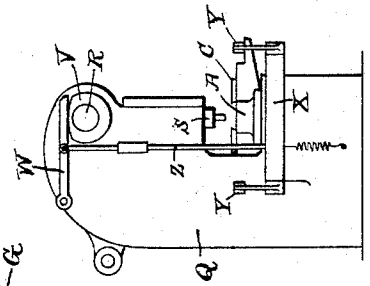

Fig. 3.

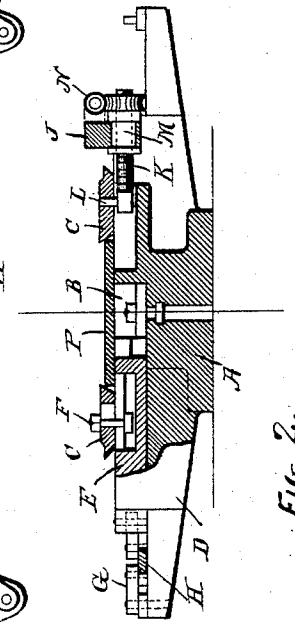

Fig. 2.

Witnesses:
P. P. Sheehan
W. S. Belden

John M. Long
Inventor
by James W. See
Attorney

THE NORRIS PETERS CO., PHOTO-LITHO., WASHINGTON, D. C.

UNITED STATES PATENT OFFICE.

JOHN M. LONG, OF HAMILTON, OHIO.

PUNCHING-MACHINE WORK-HOLDER.

SPECIFICATION forming part of Letters Patent No. 456,578, dated July 28, 1891.

Application filed March 6, 1891. Serial No. 384,011. (No model.)

To all whom it may concern:

Be it known that I, JOHN M. LONG, of Hamilton, Butler county, Ohio, have invented certain new and useful Improvements in Punching-Machine Work-Holders, of which the following is a specification.

This invention pertains to means for firmly and accurately holding work on the die of a punching-machine while the punch acts on it. Assume, as a mere example, that we have a long slab of metal in which we wish to punch a longitudinal series of holes centrally between the two edges of the slab. If the slabs vary somewhat in width, then fixed gages will not answer in bringing the holes central. By my improved system the gages are self-centering movable clamps and hold the work firmly, and also prevent its lifting as the punches rise.

My improvements will be readily understood from the following description, taken in connection with the accompanying drawings, in which—

Figure 1 is a plan of a work-holder exemplifying my invention, one of the clamp-bars being broken away at one end to show details of mechanism below it; Fig. 2, a transverse vertical section of the same in the plane of lines *a* and *b;* Fig. 3, a side elevation of an ordinary punching-machine, illustrating means by which my improved work-holder may be operated from a moving part of the machine; Fig. 4, a front elevation of one end of the punching-machine.

In the drawings, A indicates an ordinary die-block to bolt on the lower jaw of a punching-machine, as usual, and receive the dies, the particular form of die-block chosen for illustration being a long one adapted to receive a longitudinal series of dies; B, the usual dies held in the die-block and, if desired, adjustable along the die-block, the dies to be suited to the form and disposition of holes required in the work to be produced; C, a pair of clamp-bars resting on top of the die-block and adapted to be moved toward each other, so as to clamp between them the work which rests on the dies, it being understood that the inner edges of these clamp-bars will be of any chosen form best adapted to suit them to clamping engagement with the work which they are to hold on the dies, the exemplification showing these bars as having beveled lips; D, arms projecting transversely from the die-block to support the clamp-bars and furnish guides for the slides which carry the bars; E, slides fitted to reciprocate in these arms in a direction at right angles to the plane of the punches and dies; F, bolts securing the clamp-bars firmly to the slides, so that as the slides move in and out the clamp-bars are moved forcibly to and from each other, these bolts engaging slots in the clamp-bars and slides, so that the clamp-bars have a considerable range of adjustment for different widths of work; G, toggles connected with the outer ends of the slides E and having their abutments at the outer ends of the arms D; H, toggle-rods, one for each clamp-bar, connecting the toggles in series, so that as the toggle-bars reciprocate the slides and the clamp-bars carried by them are either forced inwardly or pulled outwardly; J, bearings carried by the end ones of the slides E; K, non-rotary screws attached at their inner ends to the clamp-bars and projecting outwardly from the bars; L, trunnions projecting upwardly from the inner ends of these screws through holes in the clamp-bars and serving as means by which endwise movement of the screws effects the transverse movement of the bars; M, rotary nuts on these screws, these nuts being journaled in the bearings J and provided with worm-wheels; N, an adjusting-rod at each side of the apparatus, extending from end to end thereof and journaled in the bearings J and having worms engaging the nuts M, whereby the rotation of a rod will serve to give uniform endwise adjustment to the two screws K, pertaining to a clamp-bar; O, a capstan-collar on each rod, illustrating means by which the rod may be turned, and P, in Fig. 2, a slab resting on the dies and clamped by the clamp-bars.

If a piece of work be laid upon the top of the dies and then the toggle-bars H be moved to the left, the clamp-bars will move inwardly and firmly clamp the slab while it is being punched, and it will hold the slab from lifting as the punches rise out of the work. If the clamp-bars have been adjusted symmetrically to the punches, the slab will be centered, even if the slabs vary somewhat in width, owing to the fact that both clamp-bars move

uniformly; but if the slabs are uniform, or centering is not essential, then one of the clamp-bars may be a fixed bar and the clamping and releasing performed by the movement of one of the bars only. The toggle-bars H may be moved endwise to effect the opening and closing of the clamp-bars by any suitable mechanism, and it may be operated automatically by the movements of the punching-machine, as hereinafter exemplified. By loosening bolts F and turning the worm-rods the bars may be adjusted in and out on the slides and then again firmly secured thereto, thus permitting the adjustment of the clamp-bars to suit various widths of work to be engaged, it being understood that the toggles have but little movement and that it is desirable that the clamp-bars be adjusted to properly engage the work when the toggles are in their position of most efficient pressure. The slots in the slides and clamp-bars permit quite a range of adjustment by means of the screws, and the clamp-bars may be removed and reversed, so as to employ their outer edges as the clamping edges, thus giving a still further range of adjustment. The trunnions L of the screws K engage their holes in the clamp-bars, but are separable, so as to permit the clamp-bars to be lifted off.

In Figs. 3 and 4 I illustrate an exemplifying means for operating my work-holder automatically from a moving part of the punching-machine, so that just before the punch enters the work the work will be clamped and held until the punch has done its work and risen therefrom, the work-holder thus acting as an automatic pull-off or stripper.

Referring to the figures, Q indicates the end housings of an ordinary multiple punching-machine; R, the cam-shaft thereof, which operates the punch-ram; S, the punch-ram carrying the punches; T, the cams on the cam-shaft for giving motion to the punch-ram; U, the connecting rods or pendulums connecting the cams with the punch-ram; V, a cam on the cam-shaft for giving motion to my clamp-bars; W, a lever oscillated by this cam; X, a rock-shaft having vertical arms, one for each of the toggle-rods H of my work-holder, and having a horizontal arm to be operated by the cam V; Y, links connecting the vertical arms of the rock-shaft with the toggle-rods H of the work-holder, and Z a link connecting lever W with the horizontal arm of the rock-shaft.

The cam V may be so formed that just before the punch enters the work the rock-shaft will be oscillated and the toggle-rods H pulled endwise to clamp the work, the clamping continuing until the punch has risen from the work, when the clamping will be released, which release will be effected either by positive motion of the cam or by a spring or by other means. The length of the link Z is to be accurately adjusted to give just the desired amount of pinch to the clamp-bars, or the link may be made somewhat elastic in the direction of its length, so that overstraining will do no harm.

I claim as my invention—

1. In a punching-machine work-holder, the combination, substantially as set forth, of a die-block having a die, slides fitted to reciprocate therein, mechanism to reciprocate the slides, clamp-bars secured to the slides, and adjusting-screws to regulate the position of the clamp-bars on the slides.

2. In a punching-machine work-holder, the combination, substantially as set forth, of a die-block having a die, slides fitted to reciprocate therein, mechanism to reciprocate the slides, clamp-bars secured to the slides, adjusting-screws to shift the clamp-bars on the slides, and rods geared to the screws to shift both ends of a clamp-bar in unison.

3. In a punching-machine work-holder, the combination, substantially as set forth, of a die-block having a die, a pair of clamp-bars supported thereby, toggles to move one clamp-bar toward the other, toggle-bars to operate the toggles, and connections from the toggle-bars to the punch-moving mechanism.

4. In a punching-machine work-holder, the combination, substantially as set forth, of a die-block having a die, a pair of clamp-bars thereon, and mechanism connected with said clamp-bars and with a moving part of the punching-machine to effect the opening and closing of the clamp-bars.

5. In a punching-machine work-holder, the combination, substantially as set forth, of a die-block having a die, a pair of clamp-bars supported thereby, a cam rotated by the mechanism of the punching-machine, and connections from said cam to said clamp-bars to open and close the clamp-bars.

JOHN M. LONG.

Witnesses:
J. W. SEE,
JAS. FITTON.