US00RE38281E

(19) **United States**
(12) **Reissued Patent**
Tisone

(10) **Patent Number: US RE38,281 E**
(45) **Date of Reissued Patent: *Oct. 21, 2003**

(54) **DISPENSING APPARATUS HAVING IMPROVED DYNAMIC RANGE**

(75) Inventor: **Thomas C. Tisone**, Orange, CA (US)

(73) Assignee: **Biodot, Inc.**, Irvine, CA (US)

(*) Notice: This patent is subject to a terminal disclaimer.

(21) Appl. No.: **09/897,788**

(22) Filed: **Jun. 29, 2001**

Related U.S. Patent Documents

Reissue of:
(64) Patent No.: **5,916,524**
Issued: **Jun. 29, 1999**
Appl. No.: **08/899,325**
Filed: **Jul. 23, 1997**

U.S. Applications:
(63) Continuation-in-part of application No. 08/687,712, filed on Jul. 26, 1996, now Pat. No. 5,743,960, and a continuation-in-part of application No. 08/686,957, filed on Jul. 26, 1996, now Pat. No. 5,741,554, and a continuation-in-part of application No. 08/687,711, filed on Jul. 26, 1996, now Pat. No. 5,738,728.

(51) **Int. Cl.**[7] **G01N 35/10**
(52) **U.S. Cl.** **422/100**; 73/864.15; 73/864.24; 73/864.25; 118/683; 118/305; 239/368; 239/369; 239/371; 422/81; 422/103; 436/46; 436/54; 436/180
(58) **Field of Search** 422/63–67, 81, 422/100, 103; 436/180, 43, 46, 49, 54, 174, 179; 73/864.15, 864.24, 864.25; 118/683, 305; 269/368, 369, 371

(56) **References Cited**

U.S. PATENT DOCUMENTS

2,264,564 A 12/1941 Connor
3,704,833 A 12/1972 Wheat

(List continued on next page.)

FOREIGN PATENT DOCUMENTS

EP 0 268 237 A2 5/1988
EP 0 326 510 A2 8/1989
FR 0 007 252 1/1980

OTHER PUBLICATIONS

IBC's 2nd Annual Conference on "MicroFabrication & Microfluidic Technologies. Advances in the Miniaturization of Bioanalytical Devices." Aug. 7–8, 1997. Renaissance Stanford Court Hotel, San Francisco, CA.
"IsoFlow" Linear Reagent Dispenser—Brochure by Imagene Technology.
Bio–Dot, Inc. Product Catalog.
Series XY–3000 Brochure—Aug. 1994.
BioJet Specification—Sep. 1995.
Series MD–1000 Brochure—Aug. 1994.
Bio–Dot AirJet–2000 Specification—Aug. 1994.
CV1000 Syringe Pump Dispenser—Aug. 1994.
BioDot, Inc. Brochure—Sep. 1995.
Series RR–3000 BioDot "Reel–To–Reel Membrane Handling Module with Dispensing Platform"—Not dated.

Primary Examiner—Jan Ludlow
(74) *Attorney, Agent, or Firm*—Knobbe, Martens, Olson & Bear LLP

(57) **ABSTRACT**

A method and apparatus for dispensing precise quantities of reagents is disclosed including a positive displacement syringe pump in series with a dispenser, such as an aerosol dispenser or solenoid valve dispenser. The pump is controlled by a stepper motor or the like to provide an incremental quantity or continuous flow of reagent to the dispenser. The pump and dispenser are operated in cooperation with one another such that the quantity and/or flow rate of liquid dispensed by the dispenser can be precisely metered substantially independently of the particular operating parameters of said dispenser to attain a desired flow rate, droplet size or mist quality, droplet frequency and/or droplet velocity.

53 Claims, 10 Drawing Sheets

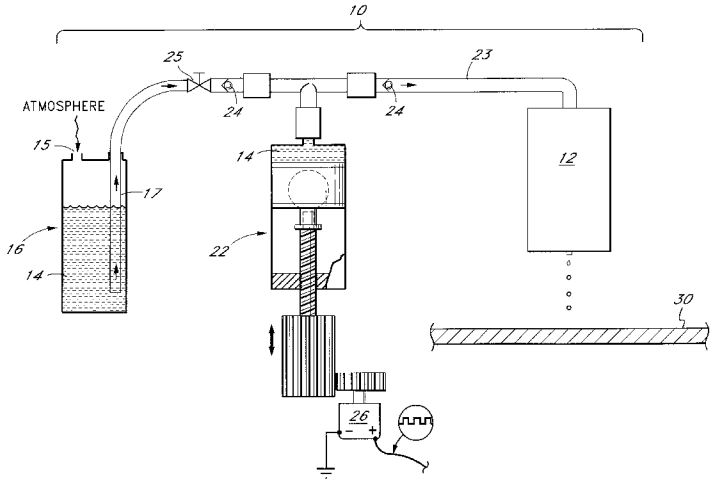

U.S. PATENT DOCUMENTS

4,121,466	A		10/1978	Reichler et al.
4,200,607	A		4/1980	Suzuki
4,207,074	A		6/1980	Suzuki
4,223,558	A		9/1980	Schmider et al.
4,318,884	A		3/1982	Suzuki
4,323,537	A		4/1982	Mody
4,369,664	A		1/1983	Bunce et al.
4,717,049	A		1/1988	Green et al.
4,818,492	A		4/1989	Shimizu
4,877,745	A		10/1989	Hayes et al.
4,922,852	A		5/1990	Price
4,926,701	A		5/1990	Tompkins
4,944,922	A		7/1990	Hayashi
5,004,159	A		4/1991	Kistner
5,056,462	A		10/1991	Perkins et al.
5,158,784	A		10/1992	Obi et al.
5,169,600	A		12/1992	Ishizaka et al.
5,175,086	A		12/1992	Takekawa et al.
5,183,742	A		2/1993	Omoto et al.
5,324,480	A		6/1994	Shumate et al.
5,334,353	A		8/1994	Blattner
5,338,688	A		8/1994	Deeg et al.
5,366,158	A		11/1994	Robisch et al.
5,385,844	A		1/1995	Kennamer et al.
5,405,050	A		4/1995	Walshe
5,464,739	A		11/1995	Johnson et al.
5,474,744	A		12/1995	Lerch
5,506,142	A		4/1996	Mahaffey et al.
5,509,966	A		4/1996	Sykes
5,551,487	A		9/1996	Gordon et al.
5,593,893	A		1/1997	Kobashi et al.
5,601,982	A		2/1997	Sargent et al.
5,658,802	A		8/1997	Hayes et al.
5,738,728	A	*	4/1998	Tisone
5,741,554	A		4/1998	Tisone
5,743,960	A		4/1998	Tisone
5,750,881	A		5/1998	Dorenkott et al.
5,756,050	A		5/1998	Ershow et al.
5,763,278	A		6/1998	Sickinger et al.
5,770,160	A		6/1998	Smith et al.
5,925,732	A		7/1999	Ecker et al.
6,083,762	A		7/2000	Papen et al.
6,203,759	B1		3/2001	Pelc et al.

* cited by examiner

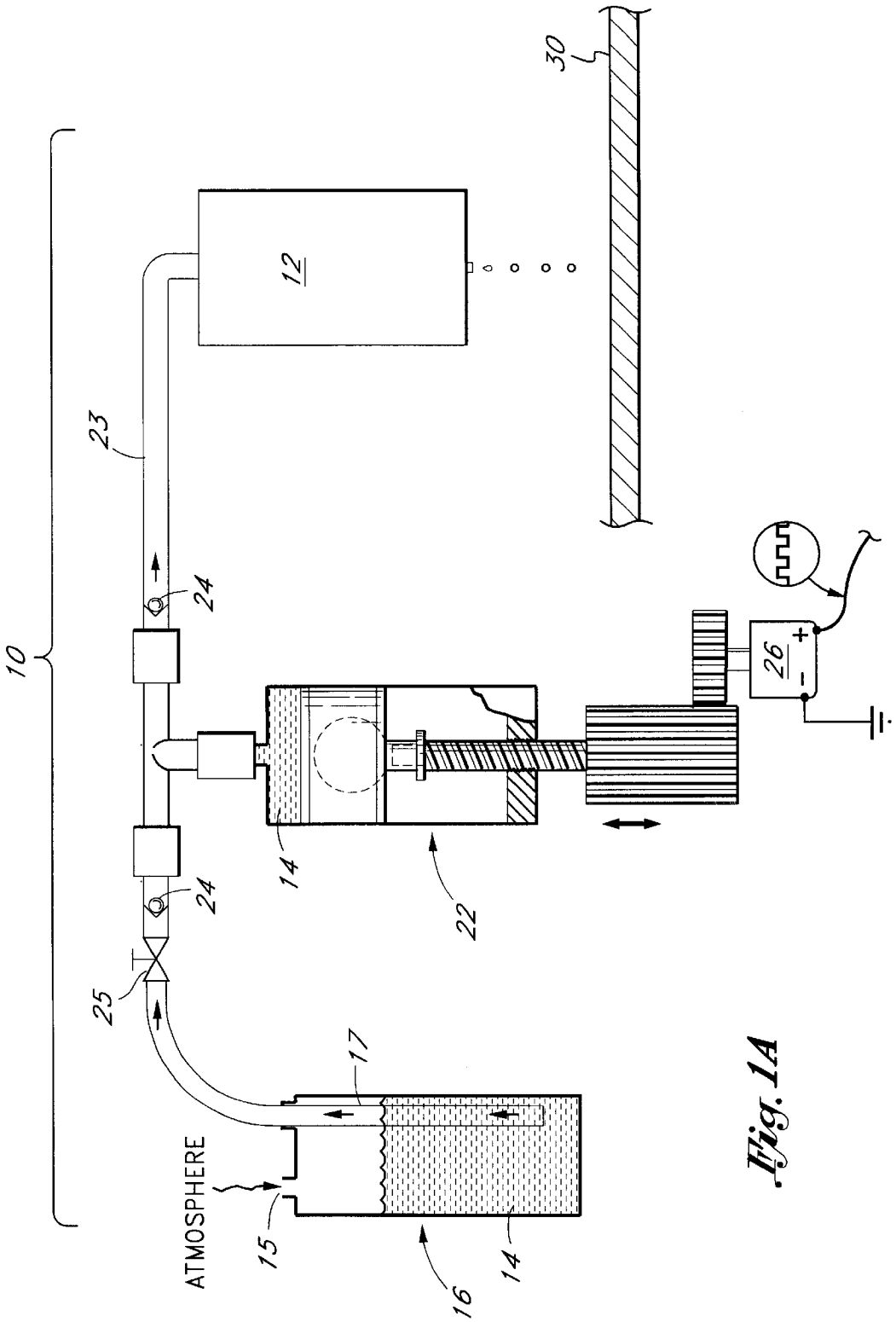

Fig. 1A

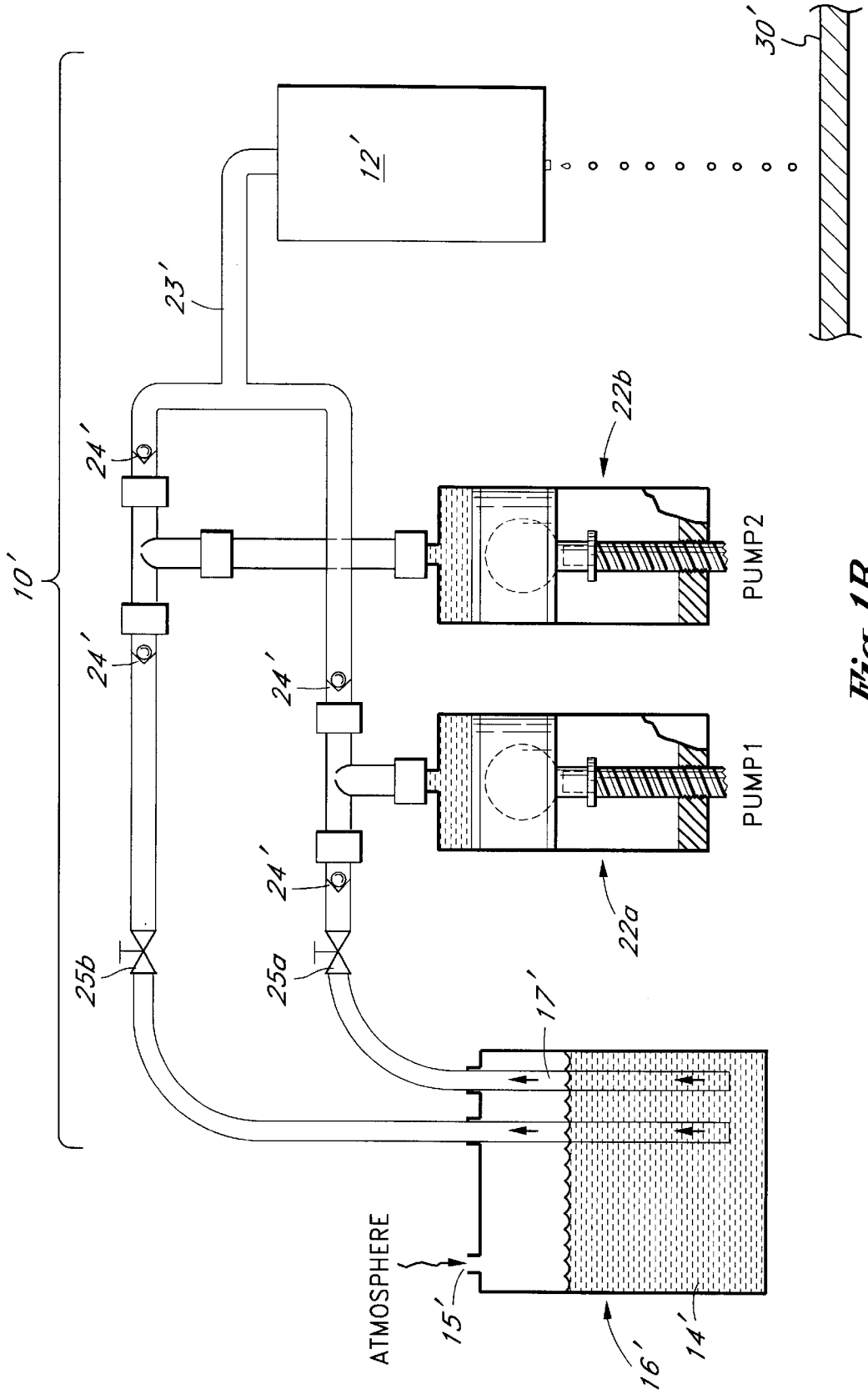
10'
12'
23'
30'
24'
24'
24'
24'
22b
22a
PUMP2
PUMP1
25b
25a
17'
ATMOSPHERE
15'
16'
14'

Fig. 1B

FIG. 2A
(Amended)

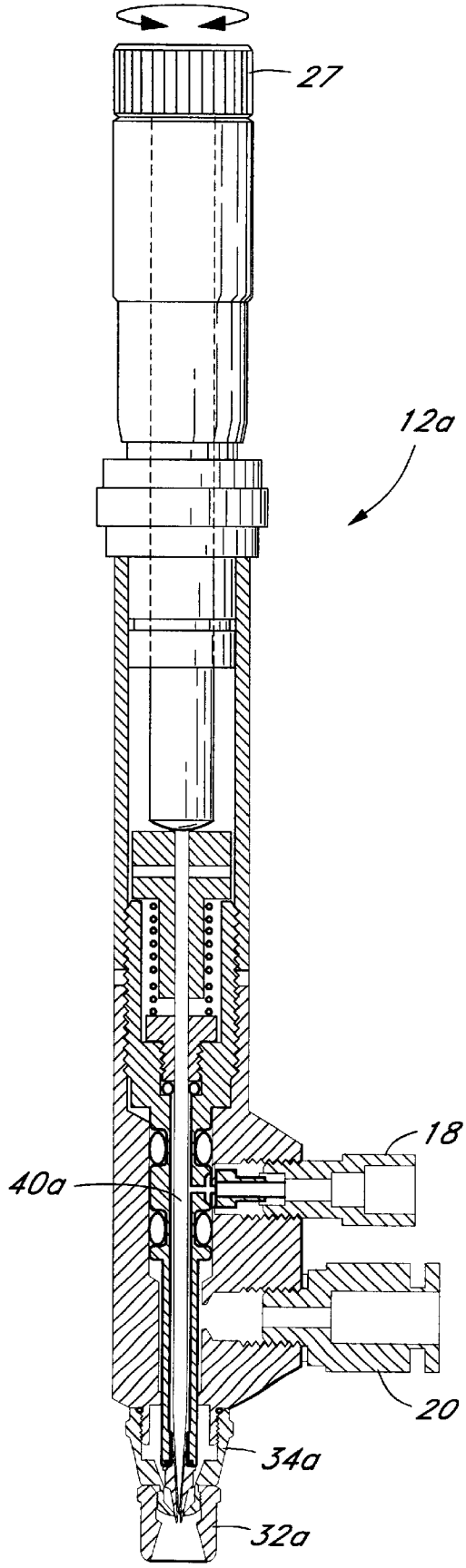

FIG. 2B
(Amended)

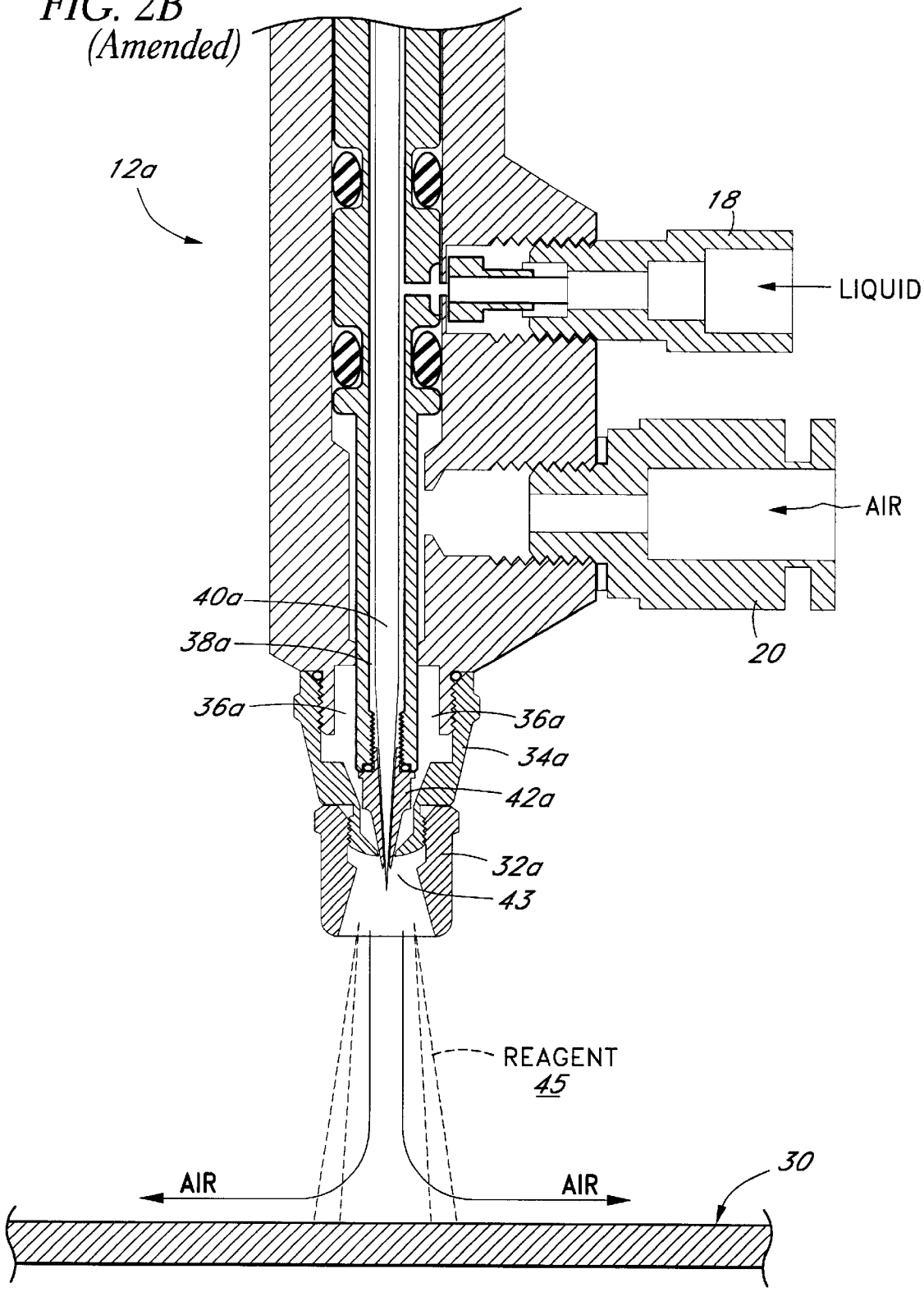

Fig. 2C

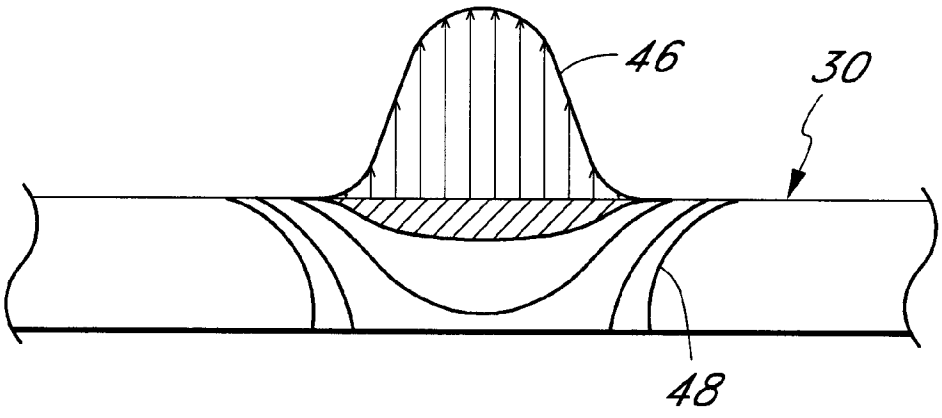

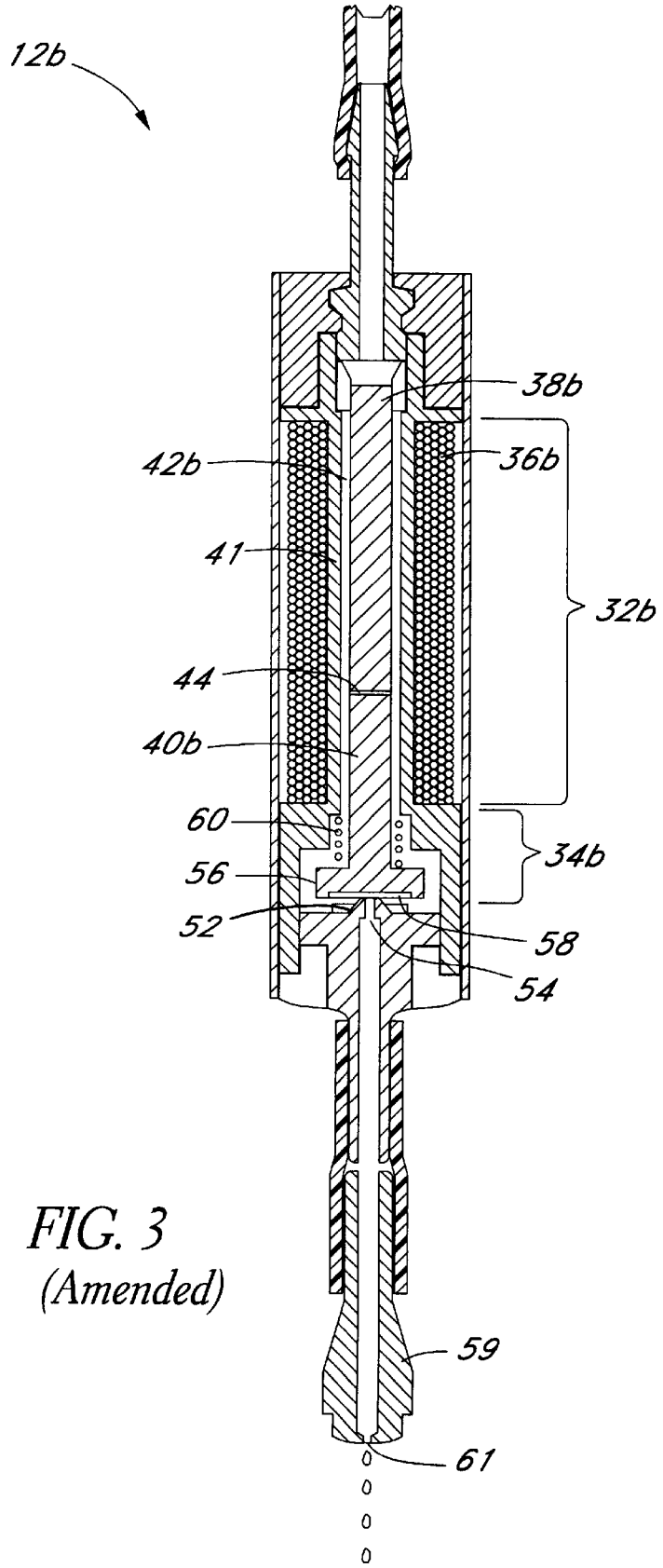

FIG. 3
(Amended)

Fig. 4

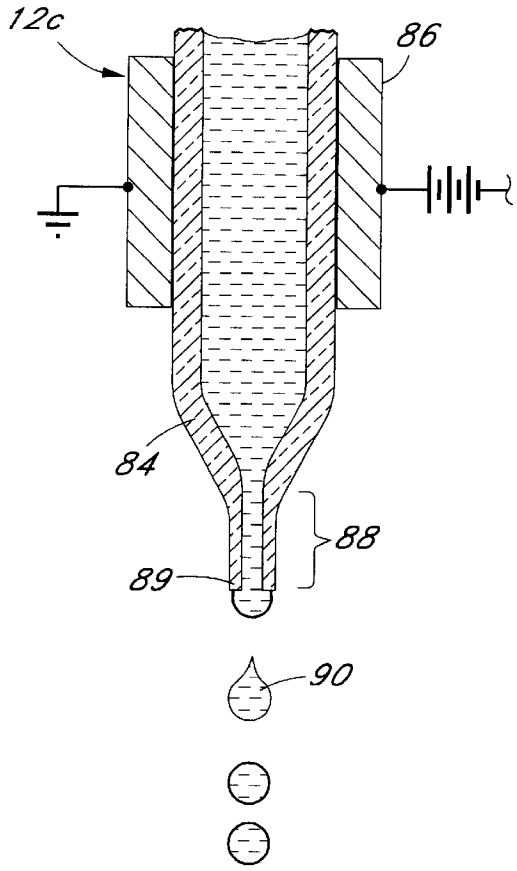

Fig. 5

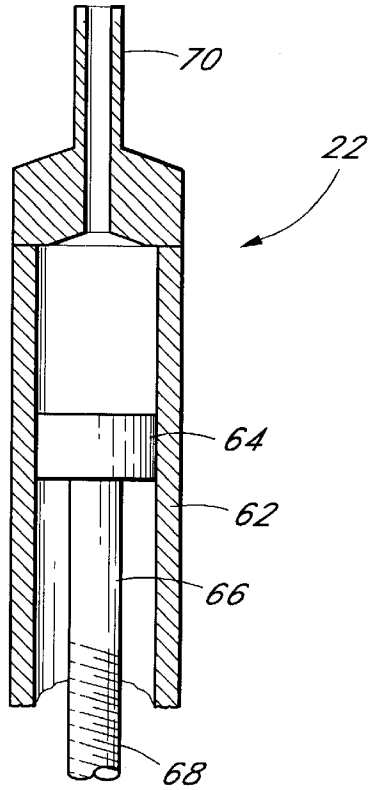

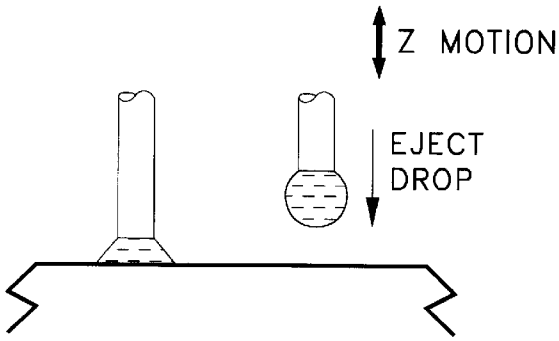

Fig. 7

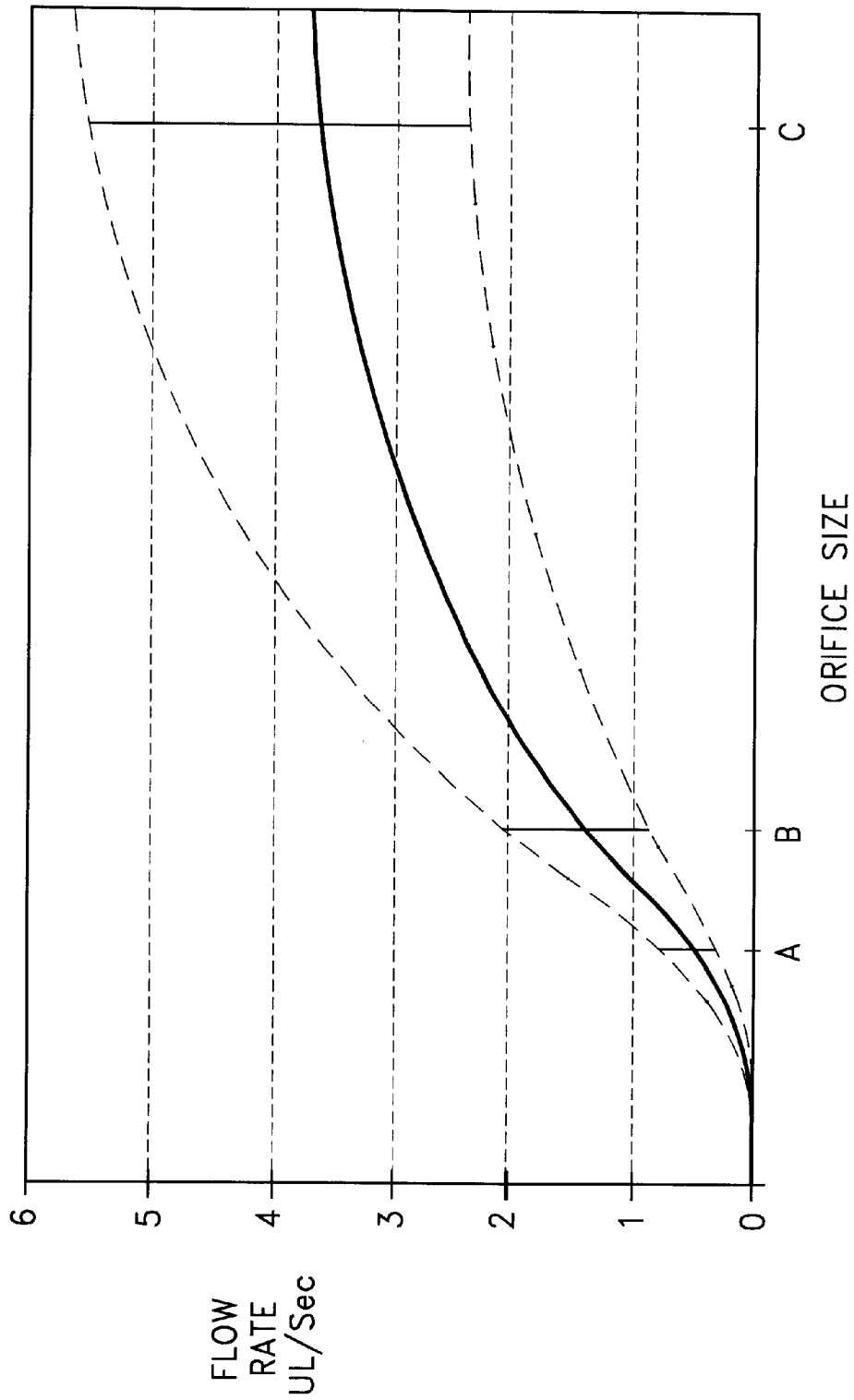

Fig. 6

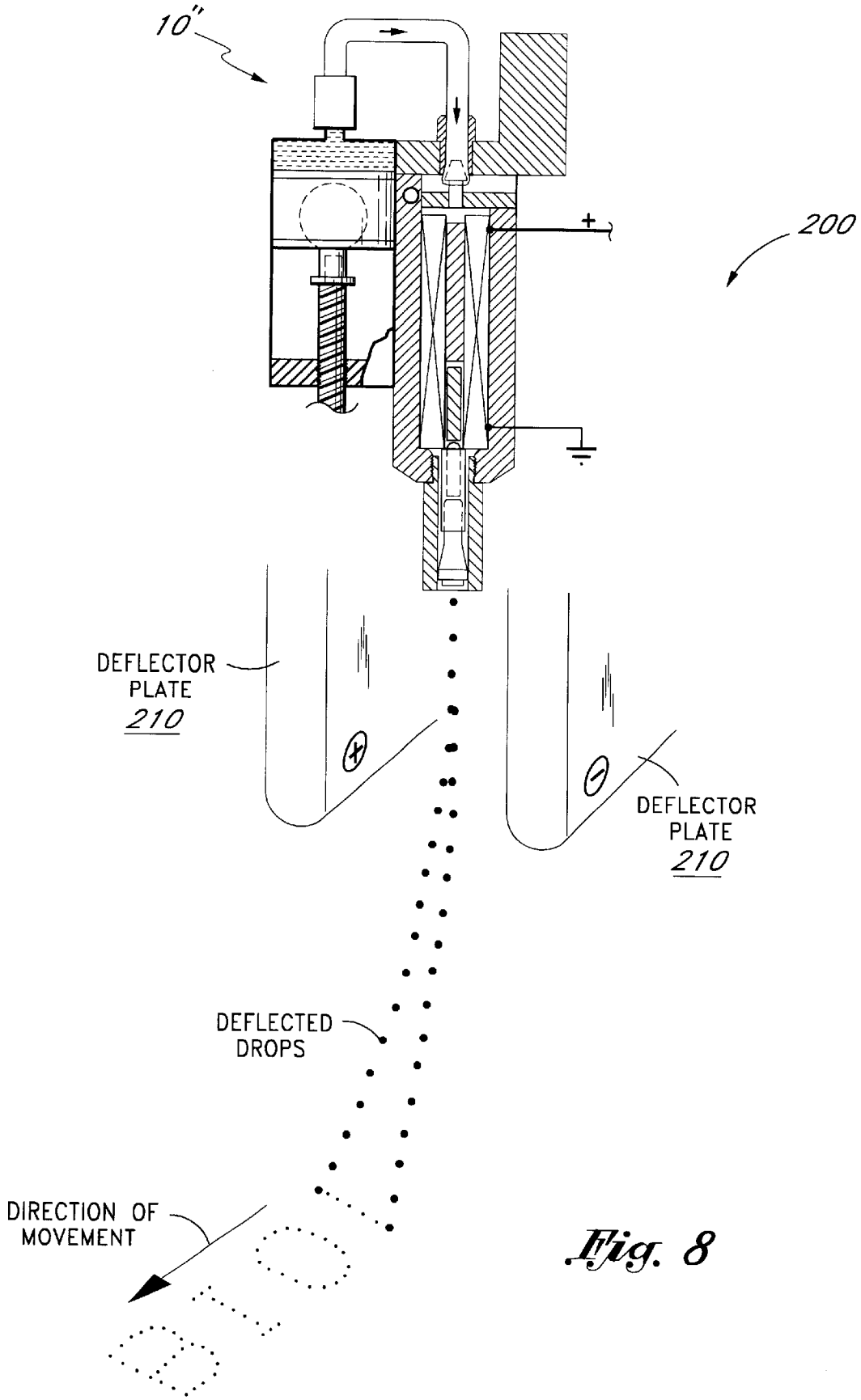
10''
200
+
DEFLECTOR PLATE 210
DEFLECTOR PLATE 210
DEFLECTED DROPS
DIRECTION OF MOVEMENT

Fig. 8

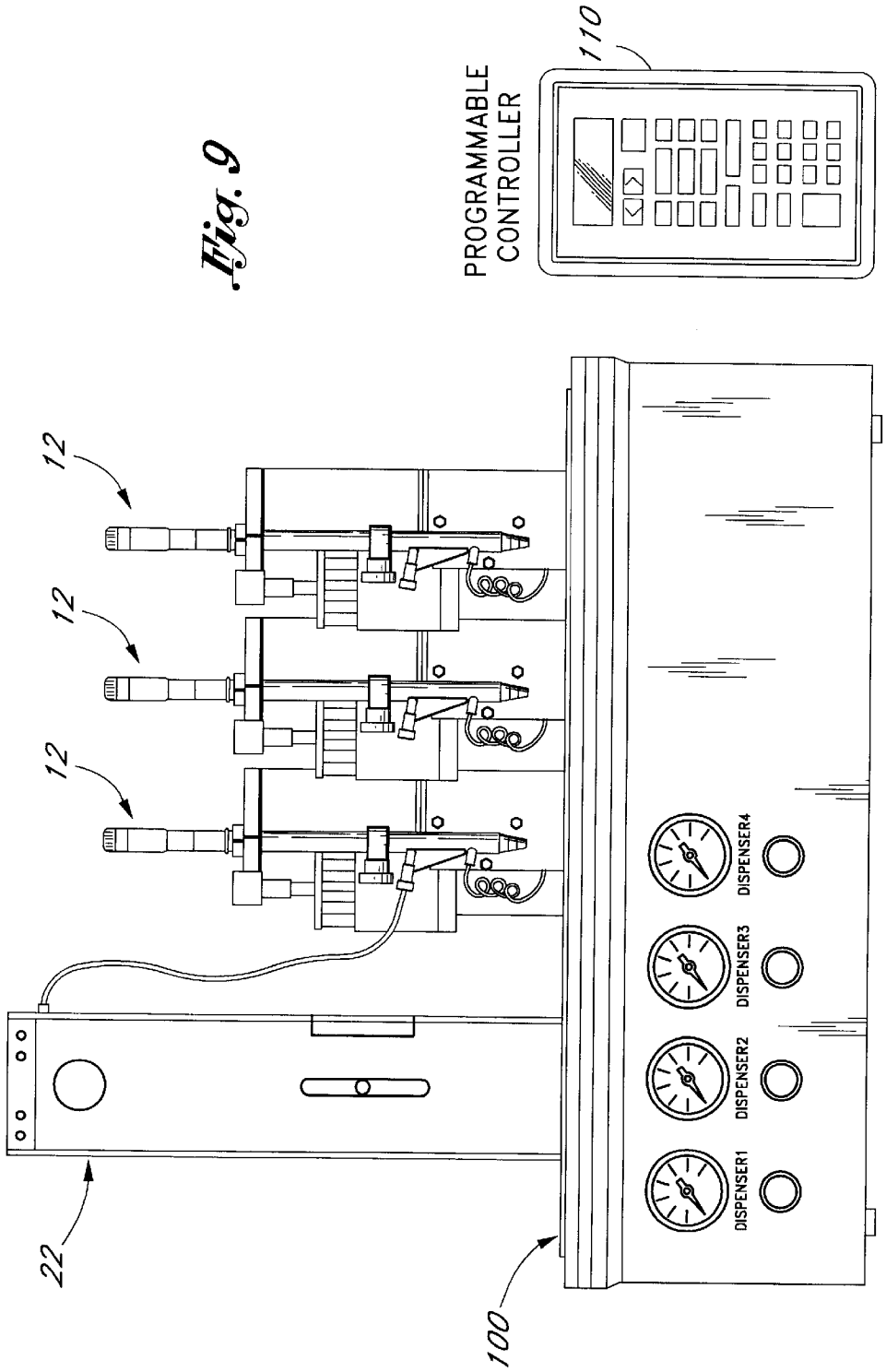
PROGRAMMABLE CONTROLLER
110
12
12
12
22
100
DISPENSER1
DISPENSER2
DISPENSER3
DISPENSER4

Fig. 9

DISPENSING APPARATUS HAVING IMPROVED DYNAMIC RANGE

Matter enclosed in heavy brackets [ ] appears in the original patent but forms no part of this reissue specification; matter printed in italics indicates the additions made by reissue.

This application is a continuation-in-part of U.S. application Ser. No. 08/687,712, filed Jul. 26, 1996, now U.S. Pat. No. 5,743,960, U.S. application Ser. No. 08/686,957, filed Jul. 26, 1996, now U.S. Pat. No. 5,741,554, and U.S. application Ser. No. 08/687,711, filed Jul. 26, 1996, now U.S. Pat. No. 5,738,728.

BACKGROUND OF THE INVENTION

1. Field of the Invention

The present invention relates generally to an improved method and apparatus for dispensing chemical reagents and other liquids onto a substrate and, in particular, to various methods and apparati particularly adapted for dispensing precise quantities of chemical reagents onto a receptive membrane, such as to form a diagnostic test strip, having improved dynamic range of operation.

2. Description of the Prior Art

Clinical testing of various bodily fluids conducted by medical personnel are well-established tools for medical diagnosis and treatment of various diseases and medical conditions. Such tests have become increasingly sophisticated, as medical advancements have led to many new ways of diagnosing and treating diseases.

The routine use of clinical testing for early screening and diagnosis of diseases or medical conditions has given rise to a heightened interest in simplified procedures for such clinical testing that do not require a high degree of skill or which persons may conduct on themselves for the purpose of acquiring information on a physiological relevant condition. Such tests may be carried out with or without consultation with a health care professional. Contemporary procedures of this type include blood glucose tests, ovulation tests, blood cholesterol tests and tests for the presence of human chorionic gonadotropin in urine, the basis of modern home pregnancy tests.

One of the most frequently used devices in clinical chemistry is the test strip or dip stick. These devices are characterized by their low cost and simplicity of use. Essentially, the test strip is placed in contact with a sample of the body fluid to be tested. Various reagents incorporated on the test strip react with one or more analytes present in the sample to provide a detectable signal.

Most test strips are chromogenic whereby a predetermined soluble constituent of the sample interacts with a particular reagent either to form a uniquely colored compound, as a qualitative indication of the presence or absence of the constituent, or to form a colored compound of variable color intensity, as a quantitative indication of the amount of the constituent present. These signals may be measured or detected either visually or via a specially calibrated machine.

For example, test strips for determining the presence or concentration of leukocyte cells, esterase or protease in a urine sample utilize chromogenetic esters which produce an alcohol product as a result of hydrolysis by esterase or protease. The intact chromogenetic ester has a color different from the alcohol hydrolysis product. The color change generated by hydrolysis of the chromogenetic ester, therefore provides a method of detecting the presence or concentration of esterase or protease, which in turn, is correlated to the presence or concentration of leukocyte cells. The degree and intensity of the color transition is proportional to the amount of leukocyte esterase or HLE detected in the urine. See U.S. Pat. No. 5,464,739.

The emergence and acceptance of such diagnostic test strips as a component of clinical testing and health care in general has led to the development of a number of quality diagnostic test strip products. Moreover, the range and availability of such products is likely to increase substantially in the future.

Because test strips are used to provide both quantitative and qualitative measurements, it is extremely important to provide uniformity in distribution of the reagents on the test strip substrate. The chemistry is often quite sensitive and medical practice requires that the testing system be extremely accurate. When automated systems are used, it is particularly important to ensure that the test strips are reliable and that the measurements taken are quantitatively accurate.

Application of one or more reagents to a test strip substrate is a highly difficult task. The viscosities and other flow properties of the reagents, their reactiveness with the substrate or other reagents vary from reagent to reagent, and even from lot to lot of the same reagent. It is also sometimes necessary or desirable to provide precise patterns of reagent on the test strip having predetermined reagent concentrations. For example, some test strips provide multiple test areas that are serially arranged so that multiple tests may be performed using a single test strip. U.S. Pat. No. 5,183,742, for instance, discloses a test strip having multiple side-by-side detection regions or zones for simultaneously performing various tests upon a sample of body fluid. Such test strip may be used to determine, for example, levels of glucose, protein, and the pH of a single blood sample. It is often difficult, however, to form sharp lines or other geometric shapes having uniform concentrations of reagent.

For several years the industry has been developing dispensing methods based on the use of either air brush dispensers or solenoid valve dispensers. Air brushes use pressurized air flowing across a needle valve opening to atomize the reagent into a mist which is then deposited onto the test strip substrate. The quality of the mist, reagent dispersion pattern and the amount of reagent flow onto the substrate is controlled by adjusting the needle valve opening and/or the pressure of the atomizing air flow. Solenoid valve dispensers generally comprise a small solenoid-activated valve which can be opened and closed electronically at high speeds. The solenoid valve is connected to a pressurized vessel or reservoir containing the fluid to be dispensed. In operation, the solenoid is energized by a pulse of electrical current, which opens the valve for a predetermined duty-cycle or open time. This allows a small volume of liquid to be forced through the nozzle forming a droplet which is then ejected from the valve onto the target substrate. The size and frequency of the droplets and the amount of reagent flow onto the substrate is typically controlled by adjusting the frequency and pulse-width of energizing current provided to the solenoid valve and/or by adjusting the pressure of the reservoir.

Currently available dispensing methods, however, are limited in the flexibility they have to independently adjust and regulate the output of the dispenser in terms of droplet size or mist quality, droplet velocity and flow rates of dispensed reagent. Flow rates can often drift due to changes

in temperature or the viscosity of the reagent. This can cause undesirable lot to lot variances of reagent coating concentrations or coating patterns. Many reagents that are used for diagnostic testing are so reactive with the receptive membrane or substrate that large droplets can form impressions on the membrane surface at the point of initial contact before the droplets flow together to form the desired pattern. As a result, it is sometimes desirable to dispense a fine mist or very small droplets of reagent onto the substrate. Often, however, a desired droplet size or mist quality is simply not attainable for a desired production flow rate. It is sometimes necessary, therefore, to perform production runs of test strips at slower than optimal speeds in order to ensure adequate results. This can increases the cost of production significantly. Certain dispensers, such as solenoid valves, are also susceptible to clogging by small air or gas bubbles forming in the valve itself or in the lines or conduits which supply reagent or other liquids to the dispenser. This is a major reliability problem with many conventional solenoid valve dispensers.

While some of these problems can be controlled or mitigated by adding surfactants or various other chemical additives to modify the surface tension or other flow characteristics of the droplets, compatible chemistry is not available for all reagents. Also the use of surfactants and other chemicals can often lead to other problems either in the test strip itself or in the dispensing apparatus or production processes.

SUMMARY OF THE INVENTION

The reagent dispensing method and apparatus in accordance with the present invention can dispense desired quantities of chemical reagents or other liquids onto a substrate, such as a receptive membrane, while advantageously providing the ability to independently and precisely adjust droplet size or mist quality, droplet velocity and reagent flow rates, both in terms of per unit time or per unit distance. Thus, the present invention provides new devices and methods of dispensing precise quantities of liquids having improved performance and dynamic range of operation.

In accordance with one preferred embodiment the present invention comprises an improved apparatus for dispensing precise quantities of liquid onto a substrate. The apparatus comprises a dispenser having an inlet and an outlet and being adapted to form droplets of liquid having a predetermined size and/or quality. The droplets are emitted by the dispenser so as to be deposited onto a receptive substrate. A positive displacement pump is provided in series with the inlet of the dispenser for metering predetermined quantities of liquid provided to the dispenser. In this manner, the quantity and/or flow rate of liquid dispensed by the dispenser can be precisely metered substantially independently of the particular operating parameters of the dispenser.

In accordance with another preferred embodiment the present invention comprises a method or apparatus for dispensing a reagent onto a substrate. A positive displacement syringe pump is provided in series with a reagent dispenser. The pump is controlled via a stepper motor or the like to provide precision incremental or continuous flow of reagent to the dispenser. The dispenser is selectively operated to form droplets or a mist of droplets of a predetermined droplet size and/or quality which are then deposited onto the target substrate. Advantageously, the droplet size, mist quality, droplet velocity and/or flow rate of the reagent can be precisely controlled independently of the particular system operating parameters of the dispenser.

In accordance with another preferred embodiment the present invention comprises an apparatus for dispensing a liquid onto a substrate, comprising a dispenser having an inlet and an outlet and a valve adapted to be opened and closed at a predetermined frequency and duty cycle to form droplets which are deposited onto the substrate. A positive displacement pump, such as a stepper-motor-operated syringe pump, is hydraulically arranged in series with the inlet of the dispenser for metering predetermined quantities of liquid to the dispenser. The pump and dispenser are operated in cooperation with one another such that the quantity and/or flow rate of liquid dispensed by the dispenser can be precisely metered substantially independently of the particular operating parameters of said dispenser. In this manner, the size, frequency, and velocity of droplets dispensed by said dispenser can each be adjusted substantially independently of the quantity and/or flow rate of liquid being dispensed.

In accordance with another preferred embodiment the present invention comprises an apparatus as described above in combination with a carriage adapted for X, X-Y or X-Y-Z motion relative to the dispenser. The dispenser and carriage are arranged and controlled in a coordinated manner to form droplets of reagent, ink, liquid toner or other liquid in accordance with a predetermined desired matrix or pattern. If desired, an array of dispensers and associated positive displacement pumps may be provided and the outlets of the dispensers being arranged in a desired pattern suitable for attaining a desired print matrix or dot pattern.

These and other embodiments and modes of carrying out the present invention will be readily ascertainable from the following detailed description of the preferred modes, having reference to the attached drawings, the invention not being limited to any particular preferred embodiment.

BRIEF DESCRIPTION OF THE DRAWINGS

FIG. **1**A is a schematic drawing of a precision metered dispensing apparatus having features in accordance with the present invention;

FIG. **1**B is a schematic drawing of an alternative embodiment of a precision metered dispensing apparatus particularly adapted for continuous web production operation and having features in accordance with the present invention;

FIGS. **2**A and **2**B are cross-sectional and detail views, respectfully, of an air brush dispenser having features in accordance with the present invention;

FIG. **2**C is a graphical representation of the test strip substrate of FIG. **2**B illustrating surface concentration of dispensed reagent and the resulting concentration gradients of the absorbed reagent;

FIG. **3** is a cross-sectional view of a solenoid valve dispenser having features in accordance with the present invention;

FIG. **4** is a cross-sectional view of an optional piezoelectric dispenser having features in accordance with the present invention;

FIG. **5** is a cross-sectional detail view of the syringe pump of FIG. **1**;

FIG. **6** is a graph comparatively illustrating the range of flow rates attainable with a precision metered aerosol dispensing apparatus constructed and operated in accordance with the present invention;

FIG. **7** is a schematic drawing illustrating two possible modes of operation of a solenoid valve dispenser constructed and operated in accordance with the present invention;

FIG. **8** is a schematic view of an electrostatic printer for use in accordance with one embodiment of the present invention; and

FIG. **9** is a front elevational view of an optional dispenser platform and multi-head dispenser for use in accordance with one embodiment of the present invention.

DETAILED DESCRIPTION OF THE PREFERRED EMBODIMENTS

FIG. **1**A is a schematic drawing of a precision metered dispensing apparatus **10** having features in accordance with the present invention. The dispensing apparatus **10** generally comprises a dispenser **12** for dispensing reagent **14** from a reservoir **16** and a positive displacement syringe pump **22** intermediate the reservoir **16** and the dispenser **12** for precisely metering the volume and/or flow rate of reagent dispensed. The dispenser **12** is operated to provide individual droplets or a spray of reagent, as desired, at the predetermined incremental quantity or flow rate.

FIG. **1**B is a schematic drawing of an alternative embodiment of a precision metered dispensing apparatus **10'** particularly adapted for continuous web production operation and having features in accordance with the present invention. For convenience of description and ease of understanding like reference numerals are used to refer to like components previously identified and described in FIG. **1**A. The dispensing apparatus **10'** generally comprises a dispenser **12'** for dispensing reagent **14'** from a reservoir **16'**. As described above, the dispenser **12'** can be selectively operated to provide individual droplets or a spray pattern of reagent, as desired, at the predetermined incremental quantity or metered flow rate.

In this case, however, tandem positive displacement syringe pumps **22**a, **22**b are disposed intermediate the reservoir **16'** and the dispenser **12'** for precisely and continuously metering the volume and/or flow rate of reagent dispensed. The pumps **22**a, **22**b are preferably connected in parallel, as shown, and are isolated from one another by appropriate check valves **24'** such that each syringe pump **22**a, **22**b is capable of independently metering a volume and/or flow rate of reagent to be dispensed. This particular dispensing apparatus configuration has significant advantages for continuous web production applications since the syringe pumps **22**a, **22**b can be operated in alternating succession while allowing the non-dispensing syringe pump to draw additional reagent **14'** from the reservoir **16'**. In this manner, continuous web production is facilitated without interruption. Of course, one or more additional syringe pumps may also be used in a similar manner, if desired, such as for dispensing a wash fluid or other suitable reagents or fluids. Alternatively, if desired, one or more continuous positive displacement pumps, such as a peristaltic pump, may be used for continuous web production.

The dispensers **12** and **12'**, described above, may comprise any one of a number of suitable dispensers well known in the art for dispensing a liquid, such as an air brush dispenser, a solenoid valve dispenser or a piezoelectric dispenser. Several particularly preferred examples are described below for illustrative purposes. Those skilled in the art will readily appreciate that a wide variety of other suitable dispensers may also be used to achieve the benefits and advantages taught herein.

Air Brush Dispenser

FIGS. **2**A and **2**B are cross-sectional and detail views, respectfully, of an air brush dispenser **12**a, for use in accordance with one embodiment of the present invention. The dispenser **12**a generally comprises a nozzle portion **[32]** *32a* and a manifold portion **[34]** *34a*. The manifold **[34]** *34a* allows compressed air to enter into a first annular chamber **[36]** *36a* and allows reagent to enter into a second annular chamber **[38]** *38a* formed between a needle valve **[40]** *40a* and a corresponding orifice **[42]** *42a*. The needle valve **[40]** *40a* is fitted within and extends through the orifice **[42]** *42a*, as shown. It is preferably axially adjustable in accordance with well-known needle valve adjustment techniques. The position of the needle valve **[40]** *40a* relative to the orifice **[42]** *42a* determines the effective size of the resulting needle valve opening **43**, and thus the amount of reagent flow for a given pressure differential.

Pressurized air flows over the needle valve opening **43** creating a venturi effect which draws reagent through the orifice **[42]** *42a* onto the tip of the needle valve **[40]** *40a*. The pressurized air accelerates past the orifice **[42]** *42a* and the needle valve opening **43** over the tip of the needle **[40]** *40a*. The resulting high velocity air atomizes the reagent **14** flowing down the needle **[40]** *40a*. This creates an aerosol mist **45** which is ejected from the nozzle **[32]** *32a* along with the excess airflow. In a conventional air brush dispenser, the volume of reagent dispensed by the nozzle **[32]** *32a* is determined by the pressure differential of the compressed air source relative to atmospheric pressure, the size of the needle valve opening **43**, and the viscosity and other flow characteristics of the reagent **14**.

In accordance with one embodiment of the present invention, however, a positive displacement pump **22** is provided in series between the reservoir **16** and the air brush **12**a as shown in FIG. **1**. The orifice **[42]** *42a* now admits a flow of reagent as determined solely by the positive displacement pump **22**. The reagent is ejected out of the orifice opening **[42]** *42a* and mixes with the pressurized air flowing out of the nozzle **[32]** *32a*. Advantageously, in accordance with the present invention absolute volume or flow rate is an input parameter controlled by the metering pump, rather than an output parameter which must be calibrated by trial and error adjustment. Thus, the air brush can be used to deliver precise quantities and flow rates of reagent onto a test strip substrate. This substrate is preferably a receptive membrane adapted to bond with the reagent so as to form a diagnostic test strip. However, the substrate **30** may also be paper, celluous, plastic or any wet or dry surface capable of receiving a dispensed reagent or other liquid.

As discussed in more detail below, a reagent dispensing apparatus and method using the combination of an air brush dispenser and a metering pump provides a new dimension of control which provides additional production capabilities not achievable with conventional air brush dispensers. Unlike conventional methods of operating an air brush dispenser, which typically provide only a single stable operating point for a given input air pressure and needle valve opening, the method and apparatus of the present invention provides a wide range of metered flow rates for achieving a stable dispersion pattern. The limits of this range can be determined experimentally. An even wider range of production flow rates can be achieved using a single pressure setting and a series of adjustable orifice openings as illustrated in FIG. **6**, discussed later.

FIG. **2**C is a graphical representation of the test strip membrane **30** of FIG. **2**B, illustrating surface concentration **46** of dispensed and the resulting concentration gradients **48** of the absorbed reagent in the membrane **30**. For stable dispersion patterns, the surface reagent concentration **46** assumes a standard Gausian distribution, as shown. The width or standard deviation of the distribution pattern will

depend upon the shape of the dispersion pattern created by the nozzle **[32]** *32a* (FIG. 2B). This is dependent primarily on the shape of the exit nozzle **[32]** *32a*, the needle valve **[40]** *40a* and the input air pressure. Higher input pressures will generally result in wider dispersion patterns.

Solenoid Valve Dispenser

FIG. **3** is a cross-sectional view of a solenoid valve dispenser **12**b for use in accordance with another embodiment of the present invention. Solenoid valve dispensers of this type are commonly used for ink-jet printing and are commercially available from sources such as The Lee Company of Westbrook, Conn. The dispenser **12**b generally comprises a solenoid portion **[32]** *32b* and a valve portion **[34]** *34b*. The solenoid portion **[32]** *32b* comprises an electromagnetic coil or winding **[36]** *36b*, a static core **[38]** *38b* and a movable plunger **[40]** *40b*. The static core **[38]** *38b* and movable plunger **[40]** *40b* are disposed within a hollow cylindrical sleeve **41** and are preferably spaced at least slightly away from the inner walls of the sleeve **41** so as to form an annular passage **[42]** *42b* through which the reagent or other liquid to be dispensed may flow. The static core **[38]** *38b* and movable plunger **[40]** *40b* are preferably formed of a ferrous or magnetic material, such as iron, and are separated by a small gap **44**. Those skilled in the art. will appreciate that when the solenoid coil **[36]** *36b* is energized a magnetic field is created which draws the plunger **[40]** *40b* upward toward the static core **[38]** *38b*, closing the gap **44** and opening the valve **[34]** *34b*.

The valve portion **[34]** *34b* comprises a valve seat **52**, having an orifice opening **54**, and a stopper **56** having a valve face **58** adapted to seal against the valve seat **52**. The stopper **56** is in mechanical communication with the plunger **[40]** *40b* and is spring biased toward the valve seat **52** via coil spring **60**. Again, those skilled in the art will readily appreciate that as the plunger **[40]** *40b* moves up and down, the valve **[34]** *34b* will open and close, accordingly. Moreover, each time the valve **[34]** *34b* opens and closes, a volume of liquid is forced through the valve orifice **54** to form a pulse or pressure wave which ejects a droplet of liquid from the exit orifice **61** of the nozzle tip **59**.

Conventionally, a pressurized reservoir (not shown) having a predetermined constant pressure is used to force liquid reagent or other liquid through the valve orifice **54** during the time interval in which the valve **[34]** *34b* is open. Under controlled conditions, such dispensers may have a repeatability of ±2% with a minimum drop size of about 30–35 nanoliters. The size of the droplet will be determined by system operating parameters such as the reservoir pressure, valve open time or duty-cycle, and the viscosity and other flow characteristics of the particular reagent or liquid being dispensed. Of course, certain fixed parameters, such the size and shape of the nozzle **59**, will also play an important role in the operational characteristics of the valve in terms of droplet size and repeatability. In general, however, droplet size will increase with increasing reservoir pressure and valve open time.

In accordance with the present invention, however, a positive displacement pump **22** is provided in series between the supply reservoir **16** and the solenoid valve dispenser **12**b, as shown in FIG. **1**. For a given range of flow rates the valve orifice **54** (FIG. **3**) now admits a quantity and/or flow rate of reagent as determined solely by the positive displacement pump **22**. For example, the flow rate could be set to deliver 1 microliter per second of reagent. The pump **22** will then deliver a steady flow of reagent to the solenoid valve dispenser **12**b at the programmed rate. As the solenoid valve is opened and closed, a series of droplets will be formed at the desired volume flow rate and ejected onto the target substrate **30**. This substrate is preferably a receptive membrane adapted to bond with the reagent so as to form a diagnostic test strip. Alternatively, the substrate **30** may be paper, celluous, plastic or any other wet or dry surface capable of receiving a dispensed reagent or other liquid.

Advantageously, within a certain operating range the size of the droplets can be adjusted without affecting the flow rate of reagent simply by changing the frequency of the energizing pulses **13** provided to the solenoid valve dispenser **12**b. Of course, there are physical limitations of valve open time or duty-cycle necessary to achieve stable droplet formation. If the open time is too short relative to the flow rate provided by the metering pump **22**, the pressure will increase and possibly prevent the valve from opening or functioning properly. If the open time is too long relative to the flow rate, then drop formation may not be uniform for each open/close cycle. Nevertheless, for a given flow rate of reagent provided by the pump **22** there will be a range of compatible frequencies and/or valve open times or duty-cycles in which stable dispensing operations may be achieved at the desired flow rate and droplet size. This range may be determined experimentally for a given production set up.

Another significant advantage of the present invention is that the velocity of individual droplets can be independently adjusted without affecting the flow rate of reagent or droplet size. This can be accomplished, for example, by varying the duty cycle of the energizing pulses **13** provided to the solenoid valve dispenser **12**b.

For example, at a drop volume of 83.3 nL the drop can be formed by using 20 syringe steps with 1 valve opening using a 100 uL syringe with a 24,000 step resolution. Using an open time of 5% will result in a higher drop velocity than using an open time of 7%. This is because with the shorter open time the pressure build up in the hydraulic line is greater than 7%.

Again, there are physical limitations posed by the length of duty-cycle necessary to achieve stable droplet formation, as noted above. Nevertheless, for a given flow rate and droplet size there will be a range of compatible duty-cycles in which stable dispensing operations may be achieved at the desired flow rate, droplet size and velocity. Again, this range may be determined experimentally for a given production set up.

As discussed in more detail below, dispensing a reagent by using a combination of a solenoid valve dispenser and a metering pump provides a new dimension of control which provides additional production capabilities not achievable with conventional solenoid valve dispensers. Unlike conventional solenoid valve dispensers, which typically have only a single flow rate or operating point for a given set of system operating parameters (e.g. reservoir pressure, valve frequency and duty cycle), the present invention provides a wide dynamic range of metered flow rates, droplet size, droplet frequency and droplet velocity for achieving stable dispensing operation. Moreover, because the solenoid valve dispenser **12**b is forced to deliver precise quantities and/or flow rates of reagent, the solenoid valve dispenser is not as susceptible to clogging due to air or gas bubbles. Rather, any air or gas bubbles tend to be recondensed or ejected out of the solenoid valve dispenser **12**b by operation of the positive displacement pump **22**.

Piezoelectric Dispenser

FIG. **4** shows a cross-sectional view of an optional piezoelectric dispenser **12**c which may also have advantageous use in accordance with the present invention. The

piezoelectric dispenser generally comprises a capillary tube **84** made of glass or other suitable material and a piezoelectric constrictor **86** disposed around the capillary tube **84**, as shown. The capillary tube **84** has a nozzle portion **88** of a reduced diameter. When the capillary tube **84** is constricted by the piezoelectric constrictor **86**, droplets **90** are formed at the exit orifice **89** of the nozzle portion **88**. Advantageously, the dynamics of the piezoelectric dispenser **12**c are such that it is able to operate at higher frequencies and shorter duty cycles than typical solenoid valve dispensers, resulting in even smaller droplets **90**. Operation of the piezoelectric dispenser in terms of adjusting droplet size, frequency, velocity and flow rates is substantially the same as that described above in connection with the solenoid valve dispenser **12**b of FIG. **3** and, therefore, will not be repeated here.

Syringe Pump

A positive displacement pump for use in accordance with one particular embodiment of the present invention may be any one of several varieties of commercially available pumping devices for metering precise quantities of liquid. A syringe-type pump **22**, as shown in FIGS. **1**A and **1**B, is preferred because of its convenience and commercial availability. A wide variety of other pumps may used, however, to achieve the benefits and advantages as disclosed herein. These may include, without limitation, rotary pumps, peristaltic pumps, squash-plate pumps, and the like. As illustrated in more detail in FIG. **5**, the syringe pump **22** generally comprises a syringe housing **62** of a predetermined volume and a plunger **64** which is sealed against the syringe housing by O-rings or the like. The plunger **64** mechanically engages a plunger shaft **66** having a lead screw portion **68** adapted to thread in and out of a base support (not shown). Those skilled in the art will readily appreciate that as the lead screw portion **68** of the plunger shaft **66** is rotated the plunger **64** will be displaced axially, forcing reagent from the syringe housing **62** into the exit tube **70**. Any number of suitable motors or mechanical actuators may be used to drive the lead screw **68**. Preferably, a stepper motor **26** (FIG. **1**) or other incremental or continuous actuator device is used so that the amount and/or flow rate of reagent can be precisely regulated.

Suitable syringe pumps are commercially available, such as the Bio-Dot CV1000 Syringe Pump Dispenser, available from Bio-Dot, Inc. of Irvine, Calif. This particular syringe pump incorporates an electronically controlled stepper motor for providing precision liquid handling using a variety of syringe sizes. The CV1000 is powered by a single 24 DC volt power supply and is controlled via an industry-standard RS232 or RS485 bus interface. The syringe pump may have anywhere from 3,000–24,000 steps, although higher resolution pumps having 48,000 steps or more may also be used to enjoy the benefits of the invention herein disclosed. Higher resolution pumps, such as piezoelectric pumps, may also be used to provide even finer resolutions as desired. The lead screw **68** may optionally be fitted with an optical encoder or similar device to detect any lost steps. Alternatively, the lead screw of the metering pump can be replaced with a piezoelectric slide to provide both smaller volume increments and also faster acceleration/deceleration characteristics. Multiple syringe pumps may also be used in parallel, for example, for delivering varying concentrations of reagent and/or other liquids to the dispenser or for alternating dispensing operations between two or more reagents. This could have application, for instance, to ink jet printing using one or more colored inks or liquid toners.

The travel of the plunger **64** is preferably about 60 mm. Plunger speeds may range from 0.8 seconds per stroke with a 10-step minimum for low-resolution pumping or 1.5 seconds per stroke with a 20-step minimum for high-speed resolution pumping. The stroke speed may vary depending upon the syringe size and the tubing used. Syringes may vary from less than 50 microliters to 25 milliliters, or more as needed. For most reagent dispensing applications it should be adequate to provide a syringe having a volume from about 500 microliters to about 25 milliliters. The minimum incremental displacement volume of the pump will depend on the pump resolution and syringe volume. For example, for a syringe housing volume of 500 ml and 12,000 step resolution pump the minimum incremental displacement volume will be about 42 nanoliters. Minimum incremental displacement volumes from about 2.1 nanoliters to 2.1 milliliters are preferred, although higher or lower incremental displacement volumes may also be used while still enjoying the benefits of the present invention.

The syringe housing **62** may be made from any one of a number of suitable bio compatible materials such as glass, Teflon™ or Kel-F. The plunger **64** is preferably formed of virgin Teflon™. Referring to FIG. **1**, the syringe is connected to the reservoir **16** and the dispenser **12** using a Teflon tubing **23**, such as ¼-inch O.D. tubing provided with luer-type fittings for connection to the syringe and dispenser. Various check valves **24** or shut-off valves **25** may also be used, as desired or needed, to direct the flow of reagent to and from the reservoir **16**, syringe pump **22** and dispenser **12**c.

Reagent Reservoir

The reagent reservoir **16** may be any one of a number of suitable receptacles capable of allowing a liquid reagent **14** to be siphoned into pump **22**. The reservoir may be pressurized, as desired, but is preferable vented to the atmosphere, as shown, via a vent opening **15**. The particular size and shape of the reservoir **16** is relatively unimportant.

A siphon tube **17** extends downward into the reservoir **16** to a desired depth sufficient to allow siphoning of reagent **14**. Preferably the siphon tube **17** extends as deep as possible into the reservoir **16** without causing blockage of the lower inlet portion of the tube **17**. Optionally, the lower inlet portion of the tube **17** may be cut at an angle or have other features as necessary to desirable to provide consistent and reliable siphoning of reagent **14**.

Operation

As indicated above, a key operational advantage achieved by the present invention is that over a certain dynamic range the flow of reagent, droplet size or mist quality, droplet frequency, and/or droplet velocity may be controlled substantially independently of one another and of the particular flow characteristics of the reagent and operating parameters of the dispenser **12**. For example, the size of droplets formed by the dispenser can be adjusted without affecting the flow rate of reagent metered by the pump by changing the operating frequency (for solenoid valve or piezoelectric dispenser) or by adjusting the exit orifice size (for an air brush dispenser). The quantity or flow rate of reagent dispensed is substantially unaffected because it is precisely controlled by the positive displacement pump **22**. This has particular advantage, for example, in applications requiring the dispensing of very small droplets or for dispensing higher viscosity reagents, since the reagent flow can be precisely controlled without substantial regard to the system operating parameters otherwise required to achieve stable dispensing operations. FIG. **6** comparatively illustrates the range of flow rates and operating conditions for given orifice openings attainable in accordance with the present invention using an air brush dispenser, versus conventional dispensing methods using an air brush dispenser.

Similarly, with a conventional solenoid valve dispenser in order to obtain very small droplets, one must attempt to shorten the open time or duty cycle of the valve. However, as the valve open time is shortened, the flow rate of reagent decreases such that the cycle frequency of the valve must be increased to compensate. At a certain point the flow characteristics of the reagent will limit the ability to achieve uniform formation of droplets when the valve open time is very small. Moreover, even if stable dispensing operation could be achieved by increasing the reservoir pressure, such increased pressure will tend to increase the droplet size and flow rate of reagent, necessitating even further adjustments to achieve stable dispensing operation at the desired flow rate and droplet size.

The present invention, however, overcomes these and other problems of the prior art by precisely metering the quantity and/or flow rate of the reagent. Advantageously, the amount of reagent can be precisely regulated over a wide dynamic range without being substantially affected by the particular operating parameters of the dispenser. This feature enables droplet size, droplet frequency, droplet velocity and other system parameters to be varied dramatically from one range to another at a given flow rate. Thus, the present invention not only provides a method for precise metering of reagent, but also adds a new dimension of operation a dispenser not before possible.

Another important operational advantage is that the range of droplet sizes attainable with the present invention is much wider than achieved with conventional solenoid valve dispensers. The method and apparatus of the present invention using the solenoid valve dispenser, for example, is capable of attaining minimum stable droplet sizes in the range of 1–4 nanoliters, compared with 30–35 nanoliters for most conventional solenoid valve dispensers. In principle, even smaller droplet sizes (on the order of 0.54 nanoliters or smaller) should be attainable in accordance with the present invention using syringe pumps having a resolution of 48,000 steps and a syringe volume of 25 microliters. Drop formation experiments have demonstrated the ability to dispense 4.16-nanoliter drops with very good repeatability using a nozzle **59** (FIG. **3**) having an exit orifice **61** of about 175 microns in diameter. A smaller exit orifice **61** having a diameter in the range of 75–125 microns should provide stable formation and dispensing of even smaller droplets in accordance with the present invention.

On the other hand, with the same setup one can program drop sizes or volume delivered up into the range of 1 uL by pulsing the syringe many times per valve opening and by increasing the valve open time to allow the larger volume to flow through the open valve. For example, for a drop size of 4.16 nL, the preferred setting would be 1 syringe step, 1 valve opening and the open time would be 2% or about 0.2 millisecond. For a drop size of 1,000 nL or 1.0 uL, the preferred setting would be 240 syringe steps, 1 valve opening and the open time would be in the range of 25%–30% or 2.5 to 3.5 milliseconds. One can also deliver the larger volumes in a high frequency burst of smaller drops. For example, one can deliver 4.16 uL as 100 drops of 41.67 nL each using a frequency of 100 Hz and an open time of 6% or 0.6 milliseconds.

Thus, the range of droplet sizes attainable for stable dispensing operation may vary by a factor of about 250 or more. This feature of the present invention has particular advantage for high production manufacturing and processing of diagnostic test strips. In certain production applications, for example, it may be desirable to dispense very small droplets or fine mists of reagent to provide optimal coating characteristics. At the same time, it may be desirable to provide high reagent flow rates for increased production levels. With a conventional solenoid valve dispenser, for example, to increase the output flow rate the valve frequency or the length of the valve open time must be increased. But the longer the valve open time is, the larger the droplets will be. There is also an operational limit for a given valve and exit orifice to how short the open time of the valve can be and how high the operating frequency can be while still attaining stable operation.

The present invention, however, allows the use of much shorter valve open times to attain stable operation at high flow rates by positively displacing the reagent through the valve opening. In other words, the flow of reagent is not substantially affected by the particular operating frequency of the valve or the length of the open time. It is dependent only on the displacement of the syringe pump, which acts as the forcing function for the entire system.

Of course, as noted above, there will be a maximum range of operation for a solenoid valve dispenser operating at given operating frequency and valve open time. The higher limit will be the maximum amount of reagent that can be forced through the valve at maximum design pressure for the given operating frequency and valve open time. The lower limit will be determined by the stability of droplet formation. If the valve open time and/or operating frequency are too small for a given flow rate, the pressures in the dispenser will become too great, causing possible rupture or malfunction of the system. If the valve open time and/or operating frequency are too large for a given flow rate, the drop formation may not be uniform for each open/close cycle. Nevertheless, for a given flow rate of reagent provided by the pump **22** there will be a range of compatible frequencies and/or valve open times for which stable operation may be achieved. This range may be determined experimentally by adjusting the operating frequency and open time of the valve to achieve stable droplet formation. Similar advantages can be achieved with air brush dispensers or other types of dispensers.

X-Y-Z Dispensing Platform

In a particularly preferred mode of operation, a dispenser may be integrated to an X, X-Y, or X-Y-Z platform wherein the programmed motion control can be coordinated with the metering pump to deliver a desired volume per unit length, with the ability to also independently control the frequency and droplet size of the reagent being dispensed. For example, it is possible to deliver reagent at a rate of 1 microliter per centimeter at a constant table speed with a droplet size ranging between 4 and 100 nanoliters. The droplet size for a given dispenser flow rate can be controlled by adjusting the operation frequency of the solenoid valve. In this context, there are several particularly desirable modes of operation: (1) line or continuous dispensing; (2) spot or "dot" dispensing; (3) aspirating; and (4) dot matrix printing. Each of these preferred modes of operation is addressed below:

Continuous Dispensing

In the continuous dispensing mode, the metering pump is set to a prescribed flow rate to deliver a metered volume of reagent in volume-per-unit time. For example, the flow rate could be programmed to deliver 1 microliter per second. The syringe will then pump reagent to the solenoid valve **12** at the predetermined rate. By opening and closing the valve during this flow, droplets will be formed according to the open time and operating frequency of the valve. Thus, in the continuous dispensing mode, the system is not only capable of delivering precise metered flow rates of reagent, but this

can be done with independent control of table speed, reagent concentration per unit length and droplet size.

If the solenoid valve dispenser is placed very close to the substrate, as shown in FIG. **7** (to the left), then reagent will flow directly onto the substrate providing a continuous line. This mode of continuous operation may provide particular advantage where reagent patterns having very sharp lines are necessary or desirable. If desired, a continuous drive reagent pump may also be used to assure a steady flow of reagent to the solenoid valve dispenser. More commonly, however, the solenoid valve dispenser will be spaced at least slightly away from the substrate, as shown in FIG. **7** (to the right). In this mode, discrete droplets will be formed which are ejected onto the substrate to form the desired pattern. The size of each droplet will determine the effective resolution of the resulting pattern formed on the substrate. It is convenient to express this resolution in terms of dots per inch or "dpi." The present invention should be capable of achieving dispensing resolutions in the range of 300–600 dpi or higher.

Dot Dispensing

In the dot dispensing mode, individual droplets can be dispensed at preprogrammed positions. This can be accomplished by synchronizing the solenoid valve and displacement pump with the X, X-Y or X-Y-Z platform. The metering pump is incremented to create a hydraulic pressure wave. The solenoid valve is coordinated to open and close at predetermined times relative to the pump increment. The valve may be initially opened either be before or after the pump is incremented. While the valve is open the pressure wave pushes a volume of fluid down the nozzle forming a droplet at the exit orifice at the time of peak pressure amplitude. The droplet will have a size determined by the incremental volume provided by the metering pump. For example, a 50-microliter syringe pump with a 12,000 step resolution will provide an incremental displacement volume of 4.16 nanoliters.

The timing and duration of each valve cycle relative to the hydraulic pressure wave created by the pump can be determined experimentally to achieve stable dispensing operation having the desired droplet size. If the wavelength of the hydraulic pressure wave is too large relative to the valve open time, the pressure wave may actually force the valve shut. If the wavelength is about equal to or shorter than the valve open time, then a pulse of fluid will be displaced forming a droplet. Again, the size or volume of the droplet will be determined primarily by the incremental displacement volume of the syringe pump.

If the valve open time is large relative to the pressure wavelength then several pulses or displacements may travel through the valve during the time in which it is open. This may be acceptable or even desirable for some applications, such as where bursts of droplets are desired at a programmed valve frequency. For example, the dispensing apparatus can be programmed to produce 10 drops at 100 Hz to yield a composite drop size of about 41.6 nanoliters. This mode of operation can provide the ability to dispense drop sizes down to less than 1 nanoliter with the appropriate nozzle design. It will depend on the resolution of the metering pump and the minimum valve open/close time and the size of the exit orifice. If the valve is left open too long, however, then the system may not maintain enough pressure to eject droplets. To achieve the most stable dispensing operation, the valve open time should be about consistent with the droplet volume or composite droplet volume dispensed.

The timing, frequency and duty cycle of the solenoid valve relative to the syringe pump and movable carriage/platform can be coordinated or synchronized by any one of a number controllers well known in the art. Typical controllers are microprocessor based and provide any one of a number of output control pulses or electrical signals of predetermined phase, pulse width and/or frequency. These signals may be used, for example, to control and coordinate the syringe pump, movable carriage/platform and solenoid valve dispenser in accordance with the present invention.

There may also be some optimum phasing of the pressure pulse relative to the open/close times of the solenoid valve. Stable operation has been observed, for instance, when the valve open time is adjusted to be an even multiple of the pulse width of the pump increment, with the open/close time of the valve being synchronized to be in phase with the resulting pressure wave. For example, with a 50-microliter syringe pump operating at 12,000-step resolution, the incremental displacement volume will be about 4.16 nanoliters. Therefore, stable operation should be possible with droplet sizes of some multiple of 4.16 nanoliters. The minimum droplet size for stable operation may be increased or decreased accordingly by adjusting the resolution of the pump or by increasing the size of the syringe. For a large droplet, say 9×4.16 nanoliters=33.28 nanoliters, it may be preferred to open the valve longer than for smaller droplets in order to get more uniform lines and stable operation. Again, the range of stable operation can be readily determined experimentally for each desired operating mode.

Aspirating

Another preferred mode of operation is aspirating ("sucking") precise quantities of reagent or other liquids from a sample or reservoir. This mode may be used, for example, in a "suck and spit" operation whereby a precise quantity of fluid is aspirated from one vial containing a sample fluid and then dispensed into another vial or onto a diagnostic test strip for testing or further processing. The dispenser/aspirator may be a simple nozzle or needle ("aspirating tube") or, more preferably, it may be a solenoid valve dispenser. The metering pump and dispenser/aspirator are preferably synchronized or coordinated with an X, X-Y or X-Y-Z movable platform.

In operation the metering pump is filled with a wash fluid such as distilled water. The tip of the dispenser or aspirating tube is placed into the fluid to be aspirated and the metering pump is decremented to draw a precise quantity of the fluid into the tip of the dispenser or aspirating tube. It is generally desirable to only aspirate a small volume of reagent into the tip of the solenoid valve dispenser that does not pass into the valve. The metering pump is then incremented to dispense a precise portion of the fluid into a receiving receptacle or substrate. The remaining fluid is dispensed into a waste/wash receptacle along with a predetermined quantity of the wash. This ensures that the fluid sample does not get diluted with the wash fluid and the sample is flushed out after each aspirate and dispense cycle.

This mode of operation has particular advantage for dispensing high viscosity reagents. Conventional solenoid valve dispensers typically do not work very well with solutions having a viscosity above about 5 centipoise. But there are many applications where it is desirable to dispense reagents having high viscosities. Advantageously, the present invention, when used in the aspirate/dispense mode, provides a solution to this problem. Again, in the aspirate/dispense mode the system will be filled with a wash fluid such as water or a water-based solution having a low viscosity. The reagent is first aspirated then dispensed, followed by washing of the valve by dispensing excess wash fluid.

In the case of a viscous reagent, the present invention can aspirate and dispense such reagents very effectively by

decreasing the speed of aspiration. This allows more time for the more viscous fluid to flow into the tip of the solenoid valve dispenser or aspirating tube. Because the viscous fluid will then be hydraulically coupled to the wash fluid, it can now be dispensed from the nozzle effectively, since the system is driven by positive displacement and the fluids are incompressible. Using this mode, the present invention can dispense reagents of a viscosity that cannot typically be directly dispensed.

Printing

Another possibly desirable mode of operation may be to use the drop dispensing capability of the present invention in conjunction with electrostatic, dot matrix, or other printing techniques to create printed patterns, lines and other geometric shapes on a substrate. In this case the metering pump may be used as an internal forcing function to control quantitatively the droplet size of each dot in a matrix pattern. By superimposing programmed dispensing frequency function and selective charging and deflecting of droplets, the present invention can provide drop-on-demand printing having extended capabilities for finer dot sizes and printing resolution.

For example, a dispensing apparatus **10**" having features of the present invention may be in used in conjunction with an electrostatic printing head **200**, such as shown in FIG. **8** to create a dot matrix pattern on a substrate. The dispensing apparatus can be programmed to dispense droplets of a predetermined size and frequency pattern. These droplets can be electrically charged such that they may be deflected by an electric field generated between a pair of deflector plates **210**. The amount of charge put on a droplet is variable, and thus, the amount of deflection is also variable. The electronics may be arranged and adjusted such that droplets can be placed in any number of predetermined positions. Selective charging and deflecting of individual droplets may be used to form a desired dot matrix pattern, as shown. Alternatively, multiple dispensers and pumps may be arranged to form an array of drop-on-demand dispensers for simple dot matrix printing operations.

Dispensing Platforms

As noted above, the dispensing apparatus in accordance with the present invention may also be mounted on any one of a number of membrane placement and handling modules. For instance, a single platform **100** may be used to mount multiple dispensers to handle one or more reagents, as shown in FIG. **9**. Such dispensing platforms may be microprocessor-based and are preferably controlled through an industry standard input/output I-O controller (not shown), such as an RS232 interface. A remote programmable controller **110** may also be used, as desired, to control the various dispensing equipment and platforms or to program a central I/O controller. The invention is also well suited for use with individual membrane strip handling modules and continuous reel-to-reel handling modules. An individual membrane strip module may incorporate an X-Y table motion for dispensing. The reel-to-reel platform may incorporate constant-speed membrane transport with mountings attached for motion of one or more dispensers. A drying oven (not shown) may also be used to increase production throughput, as desired.

It will be appreciated by those skilled in the art that the methods and apparati disclosed in accordance with the present invention can be used to dispense a wide variety of liquids, reagents and other substances and a variety of substrates. Although the invention has been disclosed in the context of certain preferred embodiments, those skilled in the art will readily appreciate that the present invention extends beyond the specifically disclosed embodiments to other alternative embodiments of the invention. Thus, it is intended that the scope of the invention should not be limited by the particular disclosed embodiments described above, but should be determined only by a fair reading of the claims that follow.

What is claimed is:

1. An apparatus for dispensing predetermined quantities of liquid onto a substrate, comprising:

a dispenser having an inlet and an outlet and being adapted to form droplets of said liquid having a size in the range of about 1–4 nanoliters to one microliter which are deposited onto said substrate; and

a metering pump hydraulically arranged in series with the inlet of said dispenser for metering predetermined quantities of said liquid to said dispenser;

whereby the quantity and/or flow rate of liquid dispensed by said dispenser is metered substantially independently of operating parameters of the dispenser.

2. The apparatus of claim **1** wherein the quantity and/or flow rate of liquid dispensed by said dispenser is precisely metered substantially independently of the droplet size or quality of said liquid being dispensed.

3. The apparatus of claim **1** wherein said dispenser comprises an aerosol dispenser having an outlet comprising an air passage terminating in a nozzle and an inlet comprising a liquid passage terminating in a venturi orifice for mixing said liquid with a flow of air to form an aerosol mist proximate said substrate.

4. The apparatus of claim **3** wherein said aerosol dispenser comprises an adjustable needle valve for adjusting the size of an orifice through which said liquid is dispersed.

5. The apparatus of claim **1** wherein said dispenser comprises a valve adapted to be opened and closed at a predetermined frequency and duty cycle to form droplets of said liquid which are deposited onto said substrate.

6. The apparatus of claim **5** wherein said valve is actuated by an electric solenoid.

7. The apparatus of claim **5** wherein said valve is actuated by a piezoelectric constrictor device.

8. The apparatus of claim **5** wherein the frequency and duty cycle of said valve can each be adjusted substantially independently for a given quantity or flow rate of liquid to produce droplets of a desired size, frequency and/or exit velocity.

9. The apparatus of claim **1** in combination with a carriage adapted for X, X-Y or X-Y-Z motion relative to said dispenser for movably transporting said substrate and wherein said dispenser is mounted in juxtaposition with said carriage.

10. The combination of claim **9** further comprising a controller in communication with said metering pump and said carriage for coordinating the output of said pump with the motion of said carriage so that said liquid may be dispensed in precise quantities of flow per unit length and such flow is precisely metered substantially without being affected by the [particular-operating] *operating* parameters of said dispenser.

11. The combination of claim **9** further comprising an array of dispensers and metering pumps, the outlets of said dispensers being arranged in a desired pattern suitable for attaining a desired print matrix or dot pattern.

12. The apparatus of claim **1** wherein said liquid comprises a chemical reagent.

13. The apparatus of claim **1** wherein said liquid comprises a chemical reagent and said substrate comprises a diagnostic test strip membrane.

14. The apparatus of claim **1** wherein said metering pump comprises a syringe pump.

15. The apparatus of claim **14** wherein said syringe pump comprises a syringe housing, a plunger axially displaceable within said syringe housing and plunger shaft having a lead screw formed thereon.

16. The apparatus of claim **15** wherein said lead screw is sized and positioned such that when said lead screw is rotated, said plunger is displaced axially, causing a predetermined quantity of said liquid to be delivered to said inlet of said dispenser.

17. The apparatus of claim **15** wherein said syringe housing has a displacement volume of between about 25 microliters about 25 milliliters.

18. The apparatus of claim **1** wherein said metering pump comprises a stepper motor adapted to cause said pump to dispense predetermined incremental quantities or flow rates of said liquid to said dispenser.

19. The apparatus of claim **18** wherein said metering pump has an incremental displacement volume of between about 0.42 nanoliters and 2.1 microliters.

20. The apparatus of claim **18** wherein said metering pump has an incremental displacement volume of less than about 4.2 nanoliters.

21. The apparatus of claim **18** wherein said metering pump has a resolution of between about 3,000 and 48,000 steps.

22. The apparatus of claim **18** wherein said metering pump has a resolution of at least about 12,000 steps.

23. The apparatus of claim **1** further comprising a second metering pump hydraulically coupled to said first metering pump for providing continuous web production capability.

24. The apparatus of claim **1** wherein said dispenser and metering pump are configured so as to provide a range of selectable droplet sizes attainable for stable operation varying by a factor of greater than about 250.

25. The apparatus of claim **1** wherein said dispenser and metering pump are configured so as to provide selectable droplet sizes ranging from less than about 4.2 nanoliters to greater than about 1 microliter.

26. An apparatus for dispensing a liquid onto a substrate, comprising:

a dispenser having an inlet and an outlet and a valve adapted to be opened and closed at a predetermined frequency and duty cycle to form droplets of said liquid which are deposited onto said substrate; and

a positive displacement pump hydraulically arranged in series with the inlet of said dispenser for metering predetermined quantities of said liquid to said dispenser;

whereby the quantity and/or flow rate of liquid dispensed by said dispenser [can be] *is* precisely metered substantially independently of [the particular] operating parameters of said dispenser.

27. The apparatus of claim **26** wherein the size, frequency, and velocity of droplets dispensed by said dispenser each is adjusted substantially independently of the quantity and/or flow rate of liquid being dispensed.

28. The apparatus of claim **26** wherein said valve is actuated by an electric solenoid.

29. The apparatus of claim **26** wherein said valve is actuated by a piezoelectric constrictor device.

30. The apparatus of claim **26** wherein the frequency and duty cycle of said valve each is adjusted substantially independently for a given quantity or flow rate of liquid to produce droplets of a desired size, frequency and/or exit velocity.

31. The apparatus of claim **26** wherein said positive displacement pump comprises a syringe pump.

32. The apparatus of claim **31** wherein said syringe pump comprises a syringe housing, a plunger axially displaceable within said syringe housing and plunger shaft having a lead screw formed thereon.

33. The apparatus of claim **32** wherein said lead screw is sized and positioned such that when said lead screw is rotated, said plunger is displaced axially, causing a predetermined quantity of said liquid to be delivered to said inlet of said dispenser.

34. The apparatus of claim **33** wherein said positive displacement pump further comprises a stepper motor adapted to cause said pump to dispense predetermined incremental quantities or flow rates of said liquid to said dispenser.

35. The apparatus of claim **26** wherein said dispenser and positive displacement pump are configured so as to provide a range of selectable droplet sizes attainable for stable operation varying by a factor of greater than about 250.

36. The apparatus of claim **1** wherein said dispenser and metering pump are configured so as to provide selectable droplet sizes in the range of about 0.54 nanoliters.

37. An apparatus for dispensing predetermined quantities of liquid onto a substrate, comprising:

a dispenser having an inlet and an outlet and being adapted to form droplets of said liquid having a size in the range of about 1–4 nanoliters to one microliter which are deposited onto said substrate; and

a pump hydraulically arranged in series with the inlet of said dispenser for metering predetermined quantities of said liquid to said dispenser;

said dispenser and pump being selected and configured so as to provide a range of selectable droplet sizes attainable for stable operation varying by a factor of greater than about 250 and whereby the quantity and/or flow rate of liquid dispensed by said dispenser is metered substantially independently of [the] operating parameters of the dispenser.

38. The apparatus of claim **37** wherein said dispenser comprises a valve adapted to be opened and closed at a predetermined frequency and duty cycle to form droplets of said liquid which are deposited onto said substrate.

39. The apparatus of claim **38** wherein said valve is actuated by an electric solenoid.

40. The apparatus of claim **38** wherein said valve is actuated by a piezoelectric constrictor device.

41. The apparatus of claim **38** wherein the frequency and duty cycle of said valve [can each be] *each is* adjusted substantially independently for a given quantity or flow rate of liquid to produce droplets of a desired size, frequency and/or exit velocity.

42. The apparatus of claim **37** in combination with a carriage adapted for X, X-Y or X-Y-Z motion relative to said dispenser for movably transporting said substrate and wherein said dispenser is mounted in juxtaposition with said carriage.

43. The combination of claim **42** further comprising a controller in communication with said pump and said carriage for coordinating the output of said pump with the motion of said carriage so that said liquid may be dispensed in precise quantities of flow per unit length and such flow is precisely metered substantially without being affected by the [particular] operating parameters of said dispenser.

44. The combination of claim **43** further comprising an array of dispensers and pumps, the outlets of said dispensers being arranged in a desired pattern suitable for attaining a desired print matrix or dot pattern.

45. The apparatus of claim **37** wherein said pump comprises a syringe pump.

46. The apparatus of claim **45** wherein said syringe pump comprises a syringe housing, a plunger axially displaceable within said syringe housing and plunger shaft having a lead screw formed thereon.

47. The apparatus of claim **45** wherein said syringe housing has a displacement volume of between about 25 microliters about 25 milliliters.

48. The apparatus of claim **37** wherein said pump comprises a stepper motor adapted to cause said pump to dispense predetermined incremental quantities or flow rates of said liquid to said dispenser.

49. The apparatus of claim **48** wherein said pump has an incremental displacement volume of between about 0.42 nanoliters and 2.1 microliters.

50. The apparatus of claim **48** wherein said pump has an incremental displacement volume of less than about 4.2 nanoliters.

51. The apparatus of claim **37** wherein said dispenser and pump are configured so as to provide selectable droplet sizes ranging from less than about 4.2 nanoliters to greater than about 1 microliter.

52. The apparatus of claim **37** wherein said dispenser and pump are configured so as to provide selectable droplet sizes in the range of about 0.54 nanoliters.

53. The apparatus of claim **1** wherein the dispenser is adapted to form droplets of said liquid having a size of about 0.54 nanoliters.

* * * * *

UNITED STATES PATENT AND TRADEMARK OFFICE

CERTIFICATE OF CORRECTION

PATENT NO. : RE 38,281 E
APPLICATION NO. : 09/897788
DATED : October 21, 2003
INVENTOR(S) : Thomas C. Tisone

It is certified that error appears in the above-identified patent and that said Letters Patent is hereby corrected as shown below:

At column 1, line 8, above "*This application* ..." please insert --*RELATED APPLICATIONS*--.

Signed and Sealed this

Seventeenth Day of July, 2007

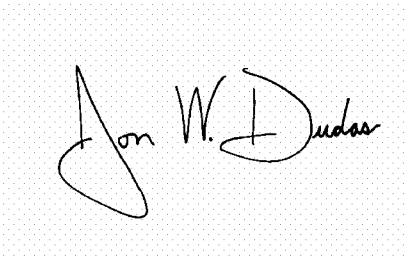

JON W. DUDAS
Director of the United States Patent and Trademark Office