(12) INTERNATIONAL APPLICATION PUBLISHED UNDER THE PATENT COOPERATION TREATY (PCT)

(19) World Intellectual Property Organization
International Bureau

(43) International Publication Date
22 March 2018 (22.03.2018)

WIPO | PCT

(10) International Publication Number
WO 2018/052767 A1

(51) International Patent Classification:
C01B 7/03 (2006.01) *C01D 5/02* (2006.01)

(21) International Application Number:
PCT/US2017/050156

(22) International Filing Date:
06 September 2017 (06.09.2017)

(25) Filing Language: English

(26) Publication Language: English

(30) Priority Data:
62/393,934 13 September 2016 (13.09.2016) US

(71) Applicant: **VEOLIA WATER TECHNOLOGIES, INC.** [US/US]; Airside Business Park, 250 Airside Drive, Moon Township, Pennsylvania 15108 (US).

(72) Inventors: **BESSENET, Sebastien**; 55351 Columbia Street, Naperville, Illinois 60563 (US). **LE FLAMMEC, Didier**; 27 Rue Basse, 78730 Saint Arnoult en Yvelines (FR).

(74) Agent: **COATS, Larry L.**; Coats & Bennett, PLLC, 1400 Crescent Green, Suite 300, Cary, North Carolina 27518 (US).

(81) Designated States *(unless otherwise indicated, for every kind of national protection available)*: AE, AG, AL, AM, AO, AT, AU, AZ, BA, BB, BG, BH, BN, BR, BW, BY, BZ, CA, CH, CL, CN, CO, CR, CU, CZ, DE, DJ, DK, DM, DO, DZ, EC, EE, EG, ES, FI, GB, GD, GE, GH, GM, GT, HN, HR, HU, ID, IL, IN, IR, IS, JO, JP, KE, KG, KH, KN, KP, KR, KW, KZ, LA, LC, LK, LR, LS, LU, LY, MA, MD, ME, MG, MK, MN, MW, MX, MY, MZ, NA, NG, NI, NO, NZ, OM, PA, PE, PG, PH, PL, PT, QA, RO, RS, RU, RW, SA, SC, SD, SE, SG, SK, SL, SM, ST, SV, SY, TH, TJ, TM, TN, TR, TT, TZ, UA, UG, US, UZ, VC, VN, ZA, ZM, ZW.

(84) Designated States *(unless otherwise indicated, for every kind of regional protection available)*: ARIPO (BW, GH, GM, KE, LR, LS, MW, MZ, NA, RW, SD, SL, ST, SZ, TZ, UG, ZM, ZW), Eurasian (AM, AZ, BY, KG, KZ, RU, TJ, TM), European (AL, AT, BE, BG, CH, CY, CZ, DE, DK, EE, ES, FI, FR, GB, GR, HR, HU, IE, IS, IT, LT, LU, LV, MC, MK, MT, NL, NO, PL, PT, RO, RS, SE, SI, SK, SM,

(54) Title: METHOD FOR PRODUCING POTASSIUM SULFATE FROM POTASSIUM CHLORIDE AND SULFURIC ACID

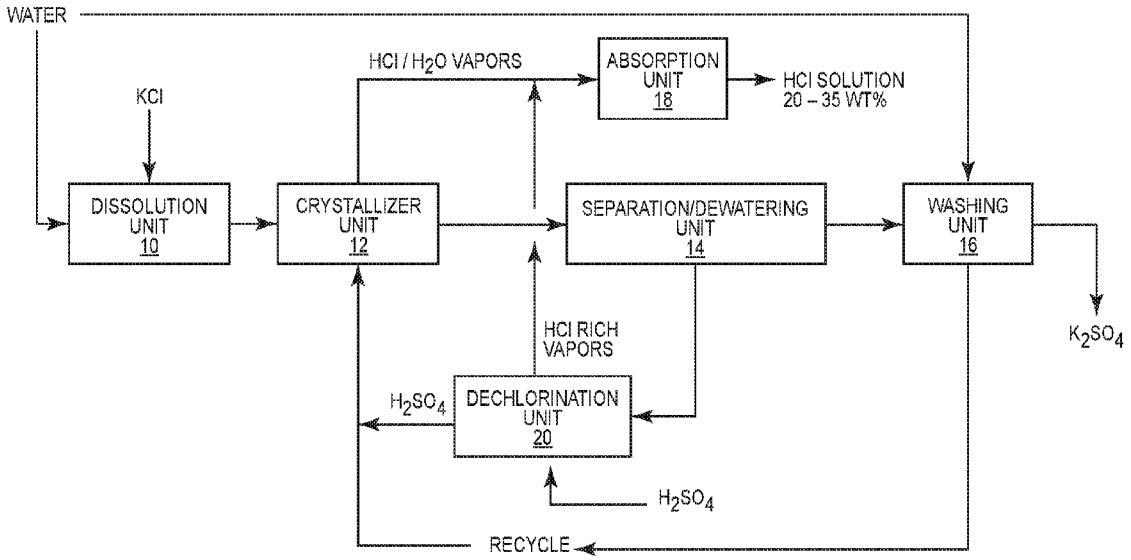

FIG. 1

(57) Abstract: A process is provided for producing potassium sulfate from potassium chloride and sulfuric acid. The process entails mixing potassium chloride with the water to form a potassium chloride slurry which is mixed with recycled sulfuric acid to form a K^+, Ct', SO_4^{2-}" acid mixture. This mixture is subjected to a crystallization process that produces potassium sulfate crystals and a hydrochloric acid-water vapor. The hydrochloric acid is separated from the hydrochloric acid- water vapor to form a hydrochloric acid solution.

[Continued on next page]

WO 2018/052767 A1

TR), OAPI (BF, BJ, CF, CG, CI, CM, GA, GN, GQ, GW, KM, ML, MR, NE, SN, TD, TG).

Declarations under Rule 4.17:

— *as to applicant's entitlement to apply for and be granted a patent (Rule 4.17(ii))*

— *as to the applicant's entitlement to claim the priority of the earlier application (Rule 4.17(iii))*

Published:

— *with international search report (Art. 21(3))*

METHOD FOR PRODUCING POTASSIUM SULFATE FROM POTASSIUM CHLORIDE AND SULFURIC ACID

FIELD OF THE INVENTION

The present invention relates to systems and processes for producing potassium sulfate from potassium chloride and sulfuric acid.

BACKGROUND OF THE INVENTION

The production of potassium sulfate from potassium chloride and sulfuric acid has been extensively evaluated in the past due to its rarity and commercial value. A Mannheim furnace, which utilizes high temperatures ranging from 450-600 ^{0}C to promote the dry conversion of KCl to K_2SO_4, is conventionally used. Among the drawbacks to this process, one stands out. This process requires large amount of energy, so much energy that the feasibility of the process in some cases in questionable.

US patent 3,998,935 describes a method in which KCl is reacted with a hot solution of $KHSO_4$ to produce K_2SO_4 by cooling crystallization. However, because direct contact occurs in a separate reactor followed by the cooling crystallization step, a three stage reaction is required for the method to be completed. Further, this method produces an excess of $KHSO_4$ at some input concentrations.

The method described in US patent 4,045,543 attempts to reduce the complexity of the method described in US patent 3,998,935 by eliminating the crystallization of an intermediate salt. This is accomplished by a four stage process: reaction, evaporation, crystallization, and filtration. The primary drawback here, however, is that the process is not economically favorable due to the required step of HCl evaporation which produces a relatively low concentrated solution.

US Patent 4,436,710 suggests a method in which a moderately high temperature (290-350 ^{0}C) is used to form a mixed salt of K_2SO_4 and $KHSO_4$. This is followed by a dissolution step in aqueous phase and cooling crystallization to produce K_2SO_4, and is in essence a Mannheim-like process step followed by two crystallization steps. As such, it does not substantially improve on energy requirements.

The process described in US patent 4,588,573 uses the approach of US patents 3,998,935 and 4,045,543 by reacting KCl and H_2SO_4 while evolving an HCl/H_2O distillate. The solution is cooled for crystallization of highly acidic mixed salts, which are converted stepwise from $KH_3(SO_4)_2$ to $KHSO_4$ to K_2SO_4. However, this is a multistage process and utilizes an arrangement similar to that described in US patent 3,998,935.

Finally, WO 03/074424 presents an approach wherein a double salt, K_3HSO_4, is separated and converted to K_2SO_4 by dilution into water.

All of the above processes are multi-stage and fairly complex processes, often requiring the production of intermediate salts, or are energy intensive and therefore not economically feasible. Further, the use of cooling crystallization often results in significant KCl crystallization, which is an undesirable impurity in the K_2SO_4 salts. Therefore, there is a need for a relatively simple process for producing K_2SO_4 that, compared to many conventional processes, consumes less energy, and does not include multiple stage complex processes and processes that require cooling crystallization.

SUMMARY OF THE INVENTION

The present invention discloses a method in which the reactants, KCl and H_2SO_4, are not directly contacted in a first process unit. Instead, a KCl slurry or solution is contacted with a recycled H_2SO_4 rich stream in an evaporative crystallizer, producing crystallized K_2SO_4 and a vapor mixture of HCl and H_2O. At this point, the vapor mixture of HCl and H_2O may be treated in separate processes to recover a more concentrated HCl if desired. Further, the crystallized K_2SO_4 may at this point undergo further processes for cleaning and/or improving quality. Commercial grade H_2SO_4 is introduced in the tank that collects the mother liquor or filtrate coming from the separation / dewatering unit. Residual Chloride in the filtrate is pushed out of the liquid to the vapors. The resulting solution is the recycled H_2SO_4 rich stream.

In one embodiment of the present invention, there is disclosed a method for producing potassium sulfate and hydrochloric acid. The method entails mixing water with potassium chloride to form a potassium chloride slurry or solution. The potassium chloride slurry or solution is mixed with recycled sulfuric acid to form a K^+, Cl^-, SO_4^{2-} acid mixture. Thereafter, the K^+, Cl^-, SO_4^{2-} acid mixture is directed to an evaporative crystallizer unit where a crystallization process takes place and which produces a concentrate containing potassium sulfate crystals and a hydrochloric acid-water vapor. The concentrate containing the potassium sulfate crystals is directed to a solids-liquid separator and the potassium sulfate crystals are separated from the concentrate, yielding a filtrate. Thereafter, the potassium sulfate crystals are washed. Further, as an option, the process includes separating the hydrochloric acid from the hydrochloric acid-water vapor to form a hydrochloric acid solution. As an option, the concentrate produced includes crystals comprising potassium and sulfate. The potassium and sulfate crystals may be in the form of potassium sulfate (K_2SO_4), potassium bisulfate ($KHSO_4$) or a mixture of both.

Other objects and advantages of the present invention will become apparent and obvious from a study of the following description and the accompanying drawings which are merely illustrative of such invention.

DESCRIPTION OF THE DRAWINGS

Figure 1 is a schematic illustration of a basic process for producing potassium sulfate and hydrochloric acid.

Figure 2 is a schematic illustration of a potassium sulfate production process similar in many respects to that shown in Figure 1 but including additional processes for treating the HCl/ H_2O vapors produced by the crystallizer to produce a more concentrated HCl solution.

Figure 3 is a schematic illustration of a potassium sulfate production process similar to Figure 2 but includes another alternative process for treating the HCl/ H_2O vapors produced by the crystallizer to produce a more concentrated HCl solution.

Figure 4 is yet another alternative design for a potassium sulfate production process where the crystallized potassium sulfate is subjected to additional washings to increase the quality of potassium sulfate produced.

Figure 5 is a schematic illustration of a process for producing potassium sulfate and hydrochloric acid but including an option for precipitating magnesium and calcium salts which may be added to the potassium sulfate or to a waste stream.

Figure 6 comprises solubility diagrams for K_2SO_4, H_2SO_4 and H_2O.

DESCRIPTION OF EXEMPLARY EMBODIMENTS

The present invention may be applied in a number of exemplary embodiments. At a basic level, the present invention follows a method in which a potassium chloride (KCl) slurry or solution is contacted with a recycled H_2SO_4 rich stream in an evaporative crystallizer. The crystallization process produces the desired product, crystallized K_2SO_4, and a vapor mixture of HCl and H_2O. Each of these products may then undergo further treatment; for example, the HCl/H_2O vapor may be processed to produce a concentrated HCl solution, while the crystallized K_2SO_4 may undergo cleaning processes.

Figure 1 shows an exemplary embodiment. Water and potassium chloride are first introduced in a dissolution unit 10, producing the KCl slurry or solution which is directed to a crystallizer unit 12. A recycled H_2SO_4 rich stream is also directed to the crystallizer unit 12, and reacts with the KCl slurry to produce K_2SO_4 and HCl, and H_2O. Alternatively, the recycled H_2SO_4 rich stream is mixed with the KCl slurry upstream of the crystallizer unit 12. Crystallizer unit 12 should be set and controlled such that very little to no chloride salt will crystallize with the K_2SO_4. After evaporative crystallization occurs, the crystallizer unit 12 produces a concentrate containing crystallized K_2SO_4 and an HCl/H_2O vapor. In some cases and as an option, the concentrate produced by the crystallizer unit 12 includes crystals comprising potassium sulfate or potassium bisulfate or mixtures of both. The concentrate containing the crystallized K_2SO_4 is sent to a separation and dewatering unit 14, whereupon the solid salt crystals are separated from the concentrate to yield a filtrate. The solids, including K_2SO_4 crystals are then directed to a washing unit 16 to ensure that no entrained liquor, which might affect the salt quality after drying, remains. After washing, the final desired K_2SO_4 product is collected.

The filtrate produced by the solids-liquid separation or dewatering unit 14 is directed to a dechlorination unit 20. This unit removes almost all Chloride from the filtrate to produce HCl rich

vapors, which are then combined with the HCl/H_2O vapor produced by the crystallizer unit 12. H_2SO_4 is added to the remaining filtrate in the dechlorination unit 20, producing an H_2SO_4 rich solution. This further has the effect of increasing the acidity of the H_2SO_4 rich solution high enough such that the residual chloride in the filtrate forms concentrated HCl, while the potassium bisulfate remains soluble. At this stage, impurities from the raw KCl, such as magnesium and calcium, may be removed as precipitated sulfate solids to improve the quality of the final potassium and sulfate crystals. The liquid solution produced by mixing the filtrate from the separation/dewatering unit 14 with H_2SO_4 is combined with the waste stream produced from the washing unit 16 to produce a recycled H_2SO_4 rich stream, which is directed back to the crystallizer unit 12 for reaction. The HCl rich vapors from the dechlorination unit 20 and the HCl/H_2O vapor from crystallizer unit 12 are directed to an absorption unit 18, producing a high concentration HCl solution. This high concentration HCl solution in one embodiment is about 20-35% HCl by weight.

Because the exact composition of the HCl/H_2O vapor from crystallizer unit 12 and thus the final concentration of the HCl solution is governed by the acidity level in the liquor in the crystallizer unit 12 and the residual potassium content after crystallization, instances may occur in which the final HCl solution does not meet a desired or threshold concentration. Therefore, in cases where the concentration of HCl in the vapor produced by the crystallizer unit 12 is relatively low, it may be desirable to provide a concentration process that increases the HCl concentration.

Figure 2 illustrates an alternate process similar to that of Figure 1, but including an HCl scrubber or condenser unit 24. The HCl/H_2O vapor from crystallizer unit 12 is directed to the scrubber or condenser unit 24, which produces H_2O vapor and a concentrated HCl solution (for example in the range of 16-20% by weight). This concentrated solution is then directed to an optional extractive distillation or dual pressure unit 26, generating highly concentrated HCl vapors which can be directed to the absorption unit 18 to produce an HCl solution having a purity of approximately 20-35 wt. %.

In the case that the HCl solution has a lower concentration than desired but is close to the required concentration for reuse, Figure 3 describes an alternative method to Figure 2. The method described is similar to that in Figure 2, but replaces the HCl scrubber or condenser unit 24 with an extractive distillation-HCl vapors dehydration unit 28, into which a feed of H_2SO_4 is provided. With an input stream of low concentration HCl/H_2O vapor, the unit 28 produces a concentrated HCl/H_2O vapor and a diluted H_2SO_4 solution, which may be recycled to the crystallizer unit 12.

Finally, depending on other constituents such as chloride and potassium bisulfate content in the crystallized K_2SO_4, the produced K_2SO_4 salt may require additional cleaning to improve quality. Figure 4 describes an exemplary embodiment of the present invention in which, after undergoing the process steps described in Figure 1, the crystallized K_2SO_4 is directed to a

wash leg 30 and contacted with a counter-current flow of a potassium sulfate solution. This wash leg aims to increase the quality of the K_2SO_4 and may be paired with a dosage of a neutralizing base, such as KOH, in a second washing and dewatering unit 32 to further reduce the chloride and salt acidity. This further has the effect of converting possible residual potassium bisulfate into potassium sulfate. The KOH may be sprayed as a solution onto the crystals and/or in the K_2SO_4 dissolution tank 34.

Figure 5 shows another embodiment of the process of the present invention. It is similar in many respects to the process shown in Figure 1 and described above. However, as an option, the H_2SO_4–rich solution produced by the dechlorination unit 20 is directed to a separation/dewatering unit 36. Calcium and magnesium salts are precipitated and filtered and may be either added to the K_2SO_4 final product or to a waste stream in cases where a high K_2SO_4 purity is required.

The drawings show the production of K_2SO_4. It is appreciated by those skilled in the art that the process may also produce KCl and $KHSO_4$. Indeed, in some instances the quantity of KCl and/or $KHSO_4$ may actually exceed the quantity of K_2SO_4 produced. Therefore, the mixing of the potassium chloride slurry or solution with sulfuric acid will form a K^+, Cl^-, SO_4^{2-} acid mixture and once subjected to a crystallization process produces a concentrate containing sulfate and potassium salts.

There are numerous advantages to the process described above. The present invention provides a process that rearranges the reactant flows into a one-stage crystallization process that enhances hydrochloric acid recovery in optimum conditions while allowing crystallization of potassium sulfate at medium acidity levels. In particular, the potassium chloride and sulfuric acid reactants are not injected at the same process step in order to shift the acidity profile compared to some conventional processes. The hydrochloric acid/water evaporation and K_2SO_4 crystallization are potentially performed in the same process unit. The reactants and products are expected to have a better and at least the same quality as conventional potassium sulfate production processes while resulting in significantly lower investment costs, as well as lower operation and maintenance costs. Also, the operating temperature is kept high enough to limit any potassium chloride co-precipitation with the potassium sulfate crystals. The process also provides a first washing and dewatering step for the potassium sulfate crystals which allows for displacing the solution acidity to a specific dechlorination step. The process also describes an optional second washing/dewatering step that allows for adjusting the potassium sulfate crystal properties to meet highest quality requirements.

The present invention may, of course, be carried out in other specific ways than those herein set forth without departing from the scope and the essential characteristics of the invention. The present embodiments are therefore to be construed in all aspects as illustrative and not restrictive and all changes coming within the meaning and equivalency range of the appended claims are intended to be embraced therein.

CLAIMS

What is claimed is:

1. A method for producing potassium sulfate and hydrochloric acid comprising:

mixing water with potassium chloride to form a potassium chloride slurry or solution;

mixing the potassium chloride slurry or solution with recycled sulfuric acid to form a K^+, Cl^-, SO_4^{2-} acid mixture;

subjecting the K^+, Cl^-, SO_4^{2-} acid mixture to an evaporative crystallization process and producing a concentrate containing potassium sulfate crystals and a hydrochloric acid-water vapor;

directing the concentrate containing the potassium sulfate crystals to a solids-liquid separator and separating the potassium sulfate crystals from the concentrate and yielding a filtrate; and

washing the potassium sulfate crystals with water.

2. The method of claim 1 wherein after separating the potassium sulfate crystals from the concentrate, mixing the filtrate with a source of sulfuric acid to produce a hydrochloric acid vapor and a stream of sulfuric acid that forms at least a part of the recycled sulfuric acid mixed with the potassium chloride slurry or solution; and mixing the hydrochloric acid vapor with the hydrochloric acid/vapor produced by the crystallizer unit.

3. The method of claim 2 wherein the filtrate includes dissolved salts and after mixing the sulfuric acid with the filtrate, precipitating the dissolved salts from the filtrate-sulfuric acid mixture.

4. The method of claim 1 including concentrating the hydrochloric acid/water vapor produced by the crystallization process to form a vapor stream having a higher hydrochloric acid concentration than the hydrochloric acid/water vapor produced by the crystallization process.

5. The method of claim 1 further including:

mixing sulfuric acid with the filtrate to form a sulfuric acid-rich stream;

wherein washing the potassium sulfate crystals with water produces a waste stream; and

mixing the waste stream with the sulfuric acid-rich stream and recycling the resulting mixture to the crystallization process.

6. The method of claim 1 wherein the evaporative crystallization process is carried out in a crystallizer unit and the method includes directing the filtrate to a dechlorination unit and mixing

sulfuric acid with the filtrate to produce a sulfuric acid-rich stream and recycling the sulfuric acid-rich stream to the crystallizer unit.

7. The method of claim 1 including directing the hydrochloric acid-water vapor through an absorption unit and producing a hydrochloric acid solution.

8. The method of claim 1 including directing the hydrochloric acid-water vapor to hydrochloric acid scrubber or condenser unit which produces water vapor and a hydrochloride acid solution and thereafter subjecting the hydrochloride acid solution to treatment in an absorption unit to concentrate the hydrochloric acid solution.

9. The method of claim 8 wherein before subjecting the hydrochloric acid to treatment in the absorption unit, treating the hydrochloric acid solution in an extractive distillation or dual pressure unit.

10. The method of claim 1 including directing the hydrochloric acid-water vapor to an extractive distillation-HCl vapor dehydration unit into which a feed of H_2SO_4 is provided which in turn produces a concentrated HCl/H_2O vapor and a diluted H_2SO_4 solution which is recycled to the crystallization process.

11. The method of claim 10 wherein the concentrated HCl/H_20 vapor is directed to an absorption unit which produces an HCl solution.

12. The method of claim 1 wherein the crystallized potassium sulfate is directed to a wash leg and contacted with a countercurrent flow of a potassium sulfate solution.

13. The method of claim 1 further including separating the hydrochloric acid from the hydrochloric acid/water vapor to form a hydrochloric acid solution.

14. The method of claim 1 including spraying a KOH solution onto the potassium sulfate crystals to neutralize residual acid on the crystals or mother liquor moisture on the crystals.

15. A method for producing potassium sulfate and hydrochloric acid comprising:
mixing water with potassium chloride to form a potassium chloride slurry or solution;
mixing the potassium chloride slurry or solution with recycled sulfuric acid to form a K^+, Cl^-, SO_4^{2-} acid mixture;

subjecting the K^+, Cl^-, SO_4^{2-} acid mixture to an evaporative crystallization process and producing a concentrate containing crystals comprising potassium and sulfate in the form of K_2SO_4, $KHSO_4$, or a mixture of both;

directing the concentrate containing said crystals of potassium and sulfate to a solids-liquid separator and separating said crystals comprising potassium and sulfate from the concentrate and yielding a filtrate; and

washing the crystals comprising potassium and sulfate with water.

16. The method of claim 15 wherein after separating said crystals comprising potassium and sulfate from the concentrate, mixing the filtrate with a source of sulfuric acid to produce a hydrochloric acid vapor and a stream of sulfuric acid that forms at least a part of the recycled sulfuric acid mixed with the potassium chloride slurry or solution; and mixing the hydrochloric acid vapor with the hydrochloric acid/vapor produced by the crystallizer unit.

17. The method of claim 16 wherein the filtrate includes dissolved salts and after mixing the sulfuric acid with the filtrate, precipitating the dissolved salts from the filtrate-sulfuric acid mixture.

18. The method of claim 15 including concentrating the hydrochloric acid/water vapor produced by the crystallization process to form a vapor stream having a higher hydrochloric acid concentration than the hydrochloric acid/water vapor produced by the crystallization process.

19. The method of claim 15 further including:

mixing sulfuric acid with the filtrate to form a sulfuric acid-rich stream;

wherein washing the crystals comprising potassium and sulfate with water produces a waste stream; and

mixing the waste stream with the sulfuric acid-rich stream and recycling the resulting mixture to the crystallization process.

20. The method of claim 15 wherein the evaporative crystallization process is carried out in a crystallizer unit and the method includes directing the filtrate to a dechlorination unit and mixing sulfuric acid with the filtrate to produce a sulfuric acid-rich stream and recycling the sulfuric acid-rich stream to the crystallizer unit.

21. The method of claim 15 including directing the hydrochloric acid-water vapor through an absorption unit and producing a hydrochloric acid solution.

22. The method of claim 15 including directing the hydrochloric acid-water vapor to hydrochloric acid scrubber or condenser unit which produces water vapor and a hydrochloride acid solution and thereafter subjecting the hydrochloride acid solution to treatment in an absorption unit to concentrate the hydrochloric acid solution.

23. The method of claim 22 wherein before subjecting the hydrochloric acid to treatment in the absorption unit, treating the hydrochloric acid solution in an extractive distillation or dual pressure unit.

24. The method of claim 15 including directing the hydrochloric acid-water vapor to an extractive distillation-HCl vapor dehydration unit into which a feed of H_2SO_4 is provided which in turn produces a concentrated HCl/H_2O vapor and a diluted H_2SO_4 solution which is recycled to the crystallization process.

25. The method of claim 24 wherein the concentrated HCl/H_20 vapor is directed to an absorption unit which produces an HCl solution.

26. The method of claim 15 wherein the crystals comprising potassium and sulfate is directed to a wash system and contacted with a countercurrent flow of a potassium sulfate solution.

27. The method of claim 15 further including separating the hydrochloric acid from the hydrochloric acid/water vapor to form a hydrochloric acid solution.

28. The method of claim 15 further including spraying a KOH solution on the crystals comprising potassium and sulfate to neutralize residual acid or mother liquor moisture on the crystals.

29. A method for producing potassium sulfate and hydrochloric acid comprising:

mixing water with potassium chloride to form a potassium chloride slurry or solution;

mixing the potassium chloride slurry or solution with recycled sulfuric acid to form a K^+, Cl^-, SO_4^{2-} acid mixture;

subjecting the K^+, Cl^-, SO_4^{2-} acid mixture to an evaporative crystallization process and producing a concentrate containing potassium sulfate crystals and a hydrochloric acid-water vapor;

directing the concentrate containing the potassium sulfate crystals to a solids-liquid separator and separating the potassium sulfate crystals from the concentrate and yielding a filtrate;

washing the potassium sulfate crystals with water; and

separating the hydrochloric acid from the hydrochloric acid/water vapor to form a hydrochloric acid solution.

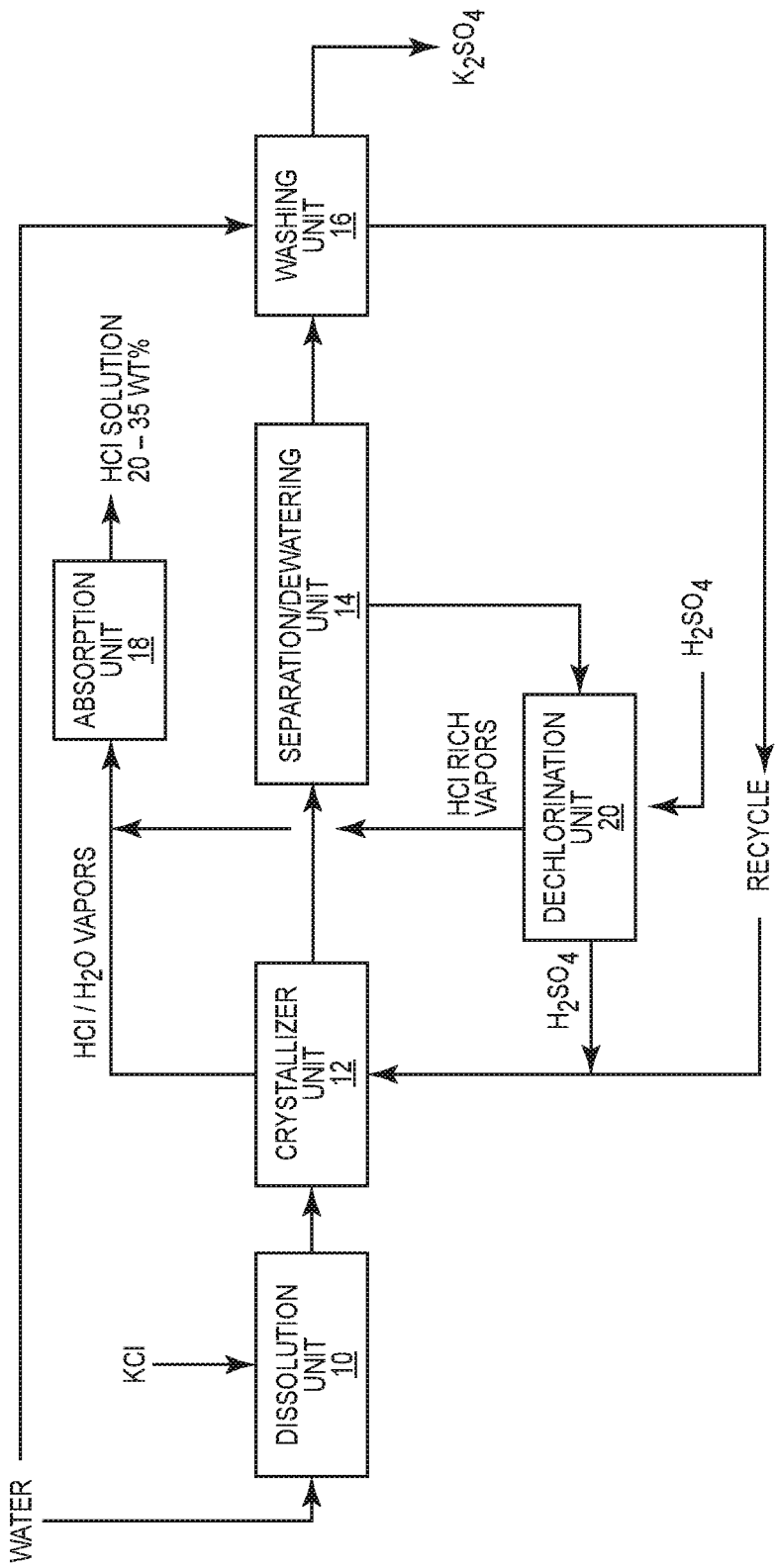
WATER
KCl
DISSOLUTION UNIT 10
CRYSTALLIZER UNIT 12
HCl / H_2O VAPORS
ABSORPTION UNIT 18
HCl SOLUTION 20 – 35 WT%
SEPARATION/DEWATERING UNIT 14
HCl RICH VAPORS
DECHLORINATION UNIT 20
H_2SO_4
H_2SO_4
WASHING UNIT 16
K_2SO_4
RECYCLE

FIG. 1

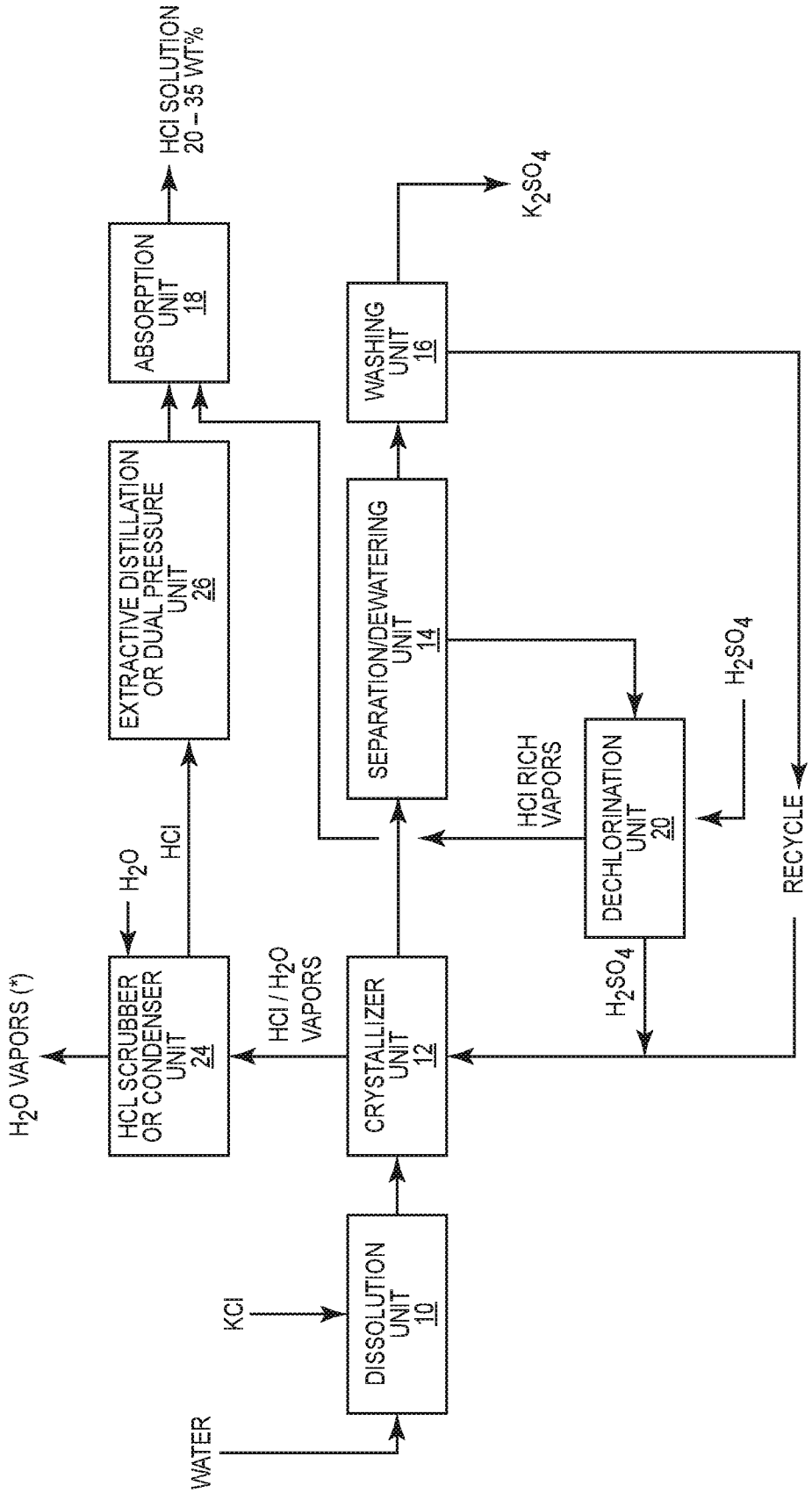
WATER
KCl
DISSOLUTION UNIT 10
CRYSTALLIZER UNIT 12
HCl / H2O VAPORS
HCL SCRUBBER OR CONDENSER UNIT 24
H2O VAPORS (*)
H2O
HCl
EXTRACTIVE DISTILLATION OR DUAL PRESSURE UNIT 26
ABSORPTION UNIT 18
HCl SOLUTION 20 – 35 WT%
SEPARATION/DEWATERING UNIT 14
WASHING UNIT 16
K2SO4
HCl RICH VAPORS
DECHLORINATION UNIT 20
H2SO4
H2SO4
RECYCLE

FIG. 2

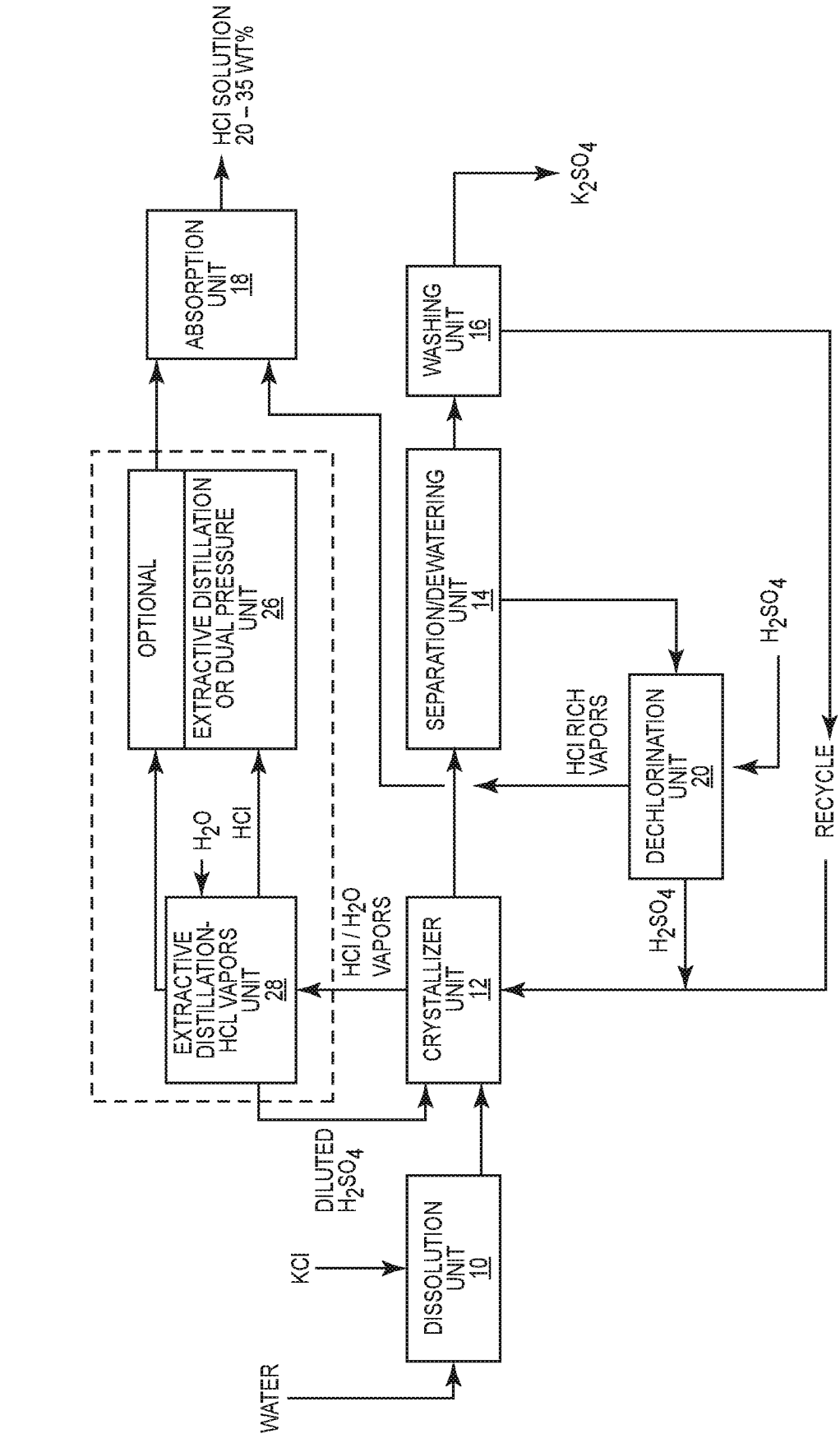
WATER
KCl
DILUTED H_2SO_4
DISSOLUTION UNIT 10
CRYSTALLIZER UNIT 12
EXTRACTIVE DISTILLATION-HCL VAPORS UNIT 28
H_2O
HCl
HCl / H_2O VAPORS
OPTIONAL
EXTRACTIVE DISTILLATION OR DUAL PRESSURE UNIT 26
ABSORPTION UNIT 18
HCl SOLUTION 20 – 35 WT%
SEPARATION/DEWATERING UNIT 14
WASHING UNIT 16
K_2SO_4
HCl RICH VAPORS
DECHLORINATION UNIT 20
H_2SO_4
H_2SO_4
RECYCLE

FIG. 3

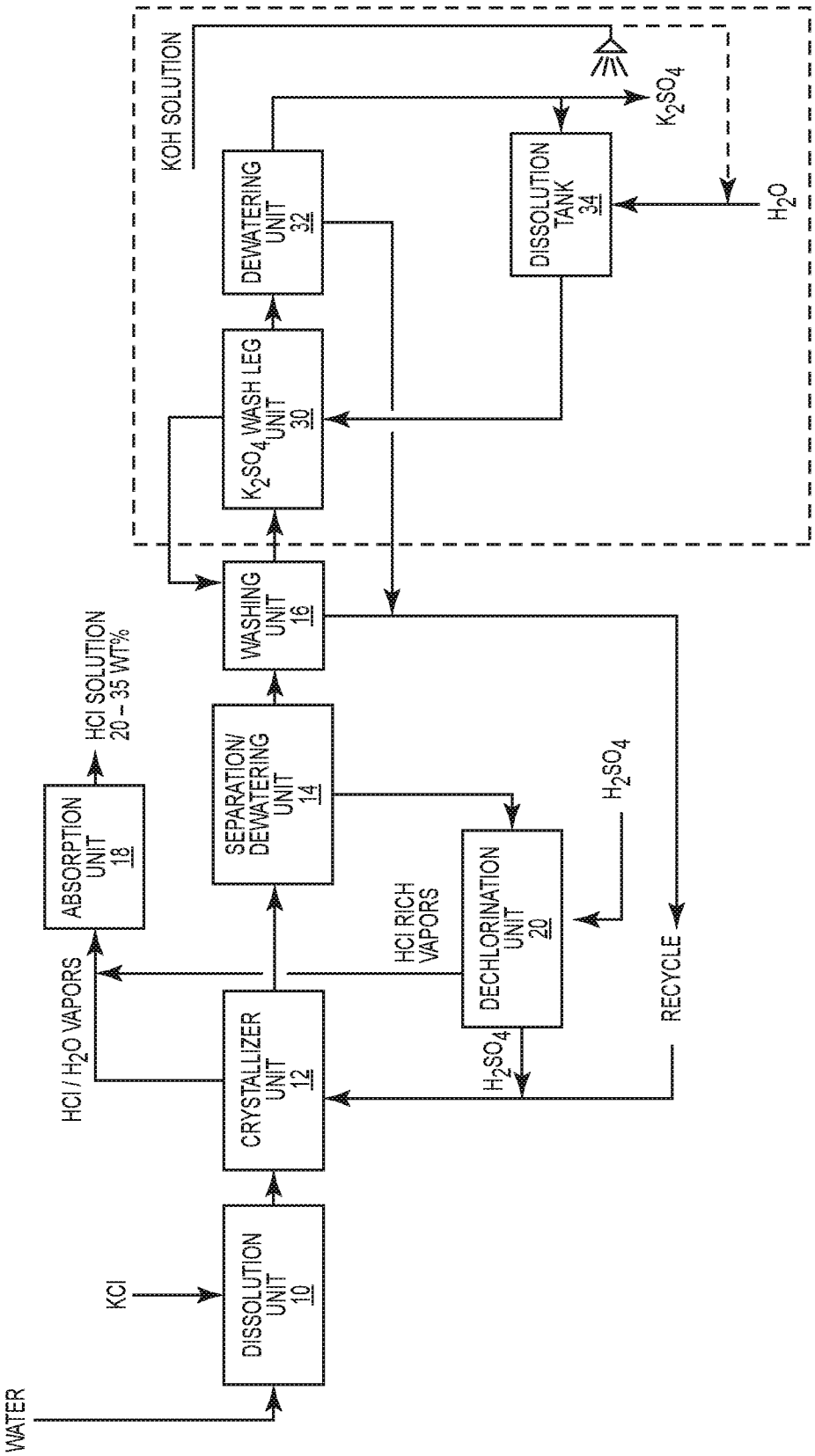
WATER
KCl
DISSOLUTION UNIT 10
CRYSTALLIZER UNIT 12
HCl / H_2O VAPORS
ABSORPTION UNIT 18
HCl SOLUTION 20 – 35 WT%
SEPARATION/ DEWATERING UNIT 14
HCl RICH VAPORS
DECHLORINATION UNIT 20
H_2SO_4
H_2SO_4
RECYCLE
WASHING UNIT 16
K_2SO_4 WASH LEG UNIT 30
DEWATERING UNIT 32
KOH SOLUTION
DISSOLUTION TANK 34
K_2SO_4
H_2O

FIG. 4

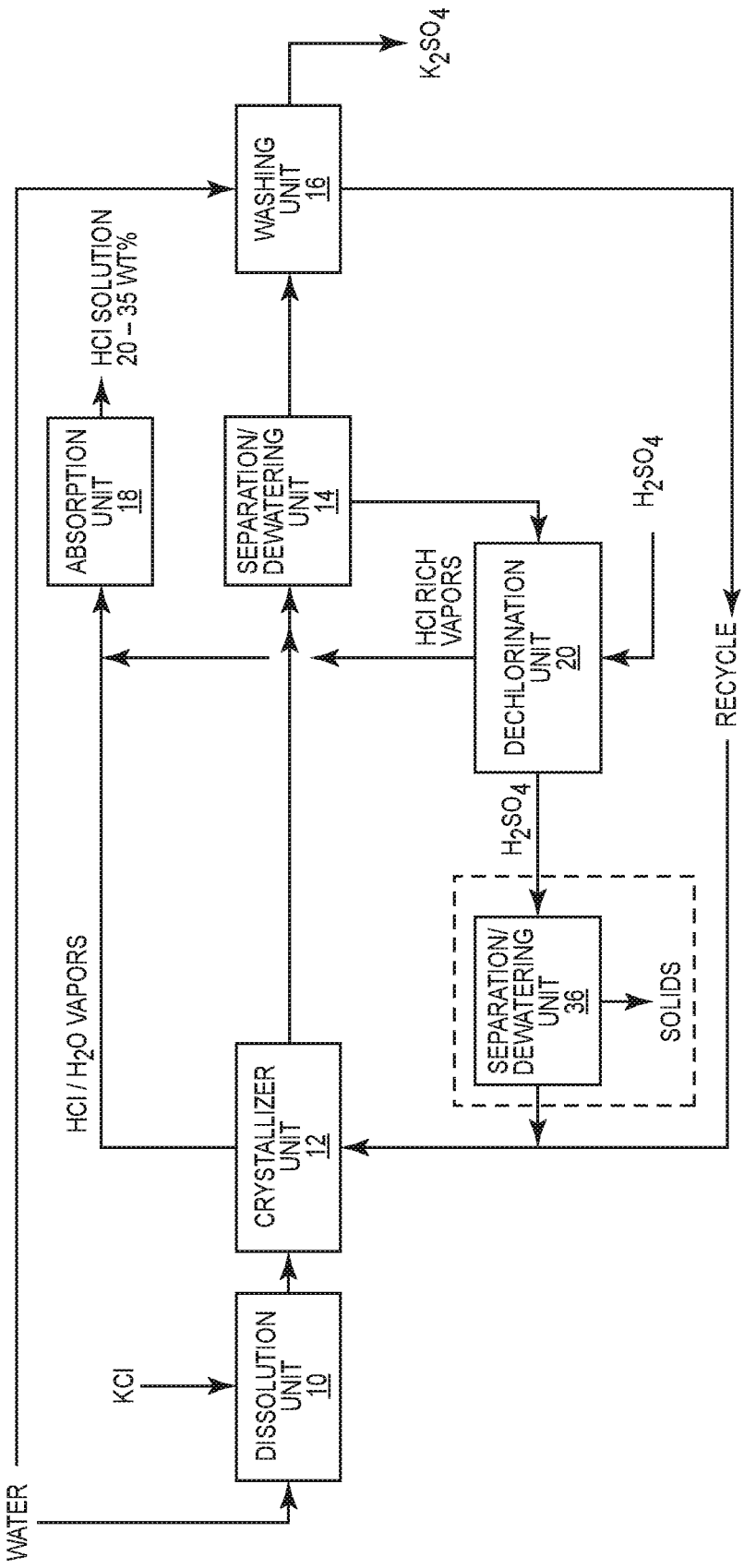
WATER
KCl
DISSOLUTION UNIT 10
CRYSTALLIZER UNIT 12
HCl / H2O VAPORS
ABSORPTION UNIT 18
HCl SOLUTION 20 – 35 WT%
SEPARATION/ DEWATERING UNIT 14
WASHING UNIT 16
K2SO4
HCl RICH VAPORS
DECHLORINATION UNIT 20
H2SO4
H2SO4
SEPARATION/ DEWATERING UNIT 36
SOLIDS
RECYCLE

FIG. 5

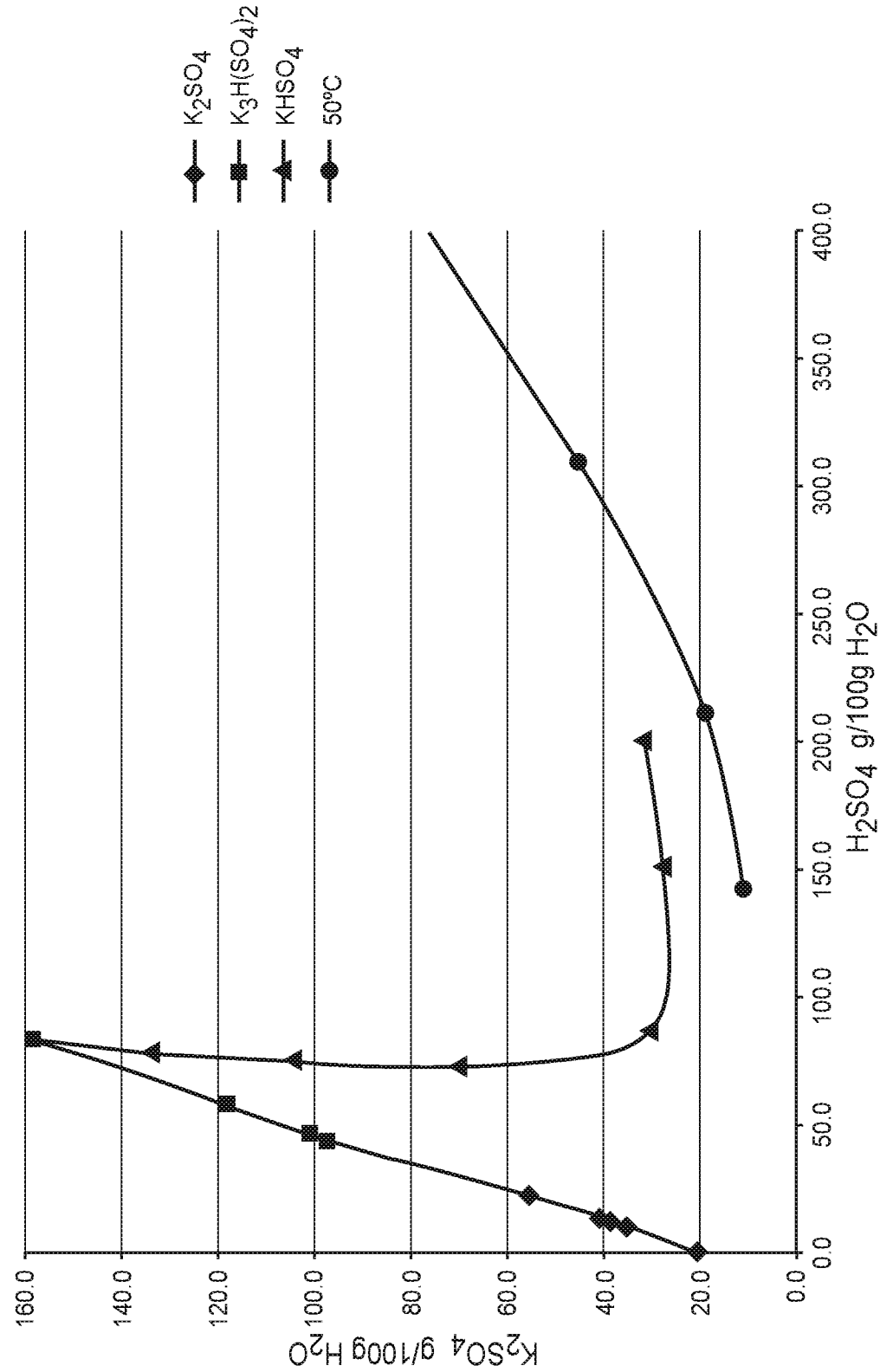
K2SO4
K3H(SO4)2
KHSO4
50°C
K2SO4 g/100g H2O
H2SO4 g/100g H2O
0.0
20.0
40.0
60.0
80.0
100.0
120.0
140.0
160.0
0.0
50.0
100.0
150.0
200.0
250.0
300.0
350.0
400.0

FIG. 6

INTERNATIONAL SEARCH REPORT

International application No
PCT/US2017/050156

A. CLASSIFICATION OF SUBJECT MATTER
INV. C01B7/03 C01D5/02
ADD.

According to International Patent Classification (IPC) or to both national classification and IPC

B. FIELDS SEARCHED

Minimum documentation searched (classification system followed by classification symbols)
C01B C01D

Documentation searched other than minimum documentation to the extent that such documents are included in the fields searched

Electronic data base consulted during the international search (name of data base and, where practicable, search terms used)
EPO-Internal, BIOSIS, CHEM ABS Data, COMPENDEX, EMBASE, INSPEC, WPI Data

C. DOCUMENTS CONSIDERED TO BE RELEVANT

Category*	Citation of document, with indication, where appropriate, of the relevant passages	Relevant to claim No.
Y	DATABASE WPI Section Ch, Week 199024 Thomson Scientific, London, GB; Class E34, AN 1990-183732 XP002775437, -& SU 1 527 143 A1 (KAZAN KIROV CHEM TECHN) 7 December 1989 (1989-12-07) the whole document -----	1-29
Y	CN 104 876 248 A (UNIV CENTRAL SOUTH) 2 September 2015 (2015-09-02) the whole document -----	1-29
Y	US 2013/121900 A1 (NEUMAN THOMAS H [US] ET AL) 16 May 2013 (2013-05-16) paragraph [0025] -----	1-29

-/--

[X] Further documents are listed in the continuation of Box C.

[X] See patent family annex.

* Special categories of cited documents :

"A" document defining the general state of the art which is not considered to be of particular relevance

"E" earlier application or patent but published on or after the international filing date

"L" document which may throw doubts on priority claim(s) or which is cited to establish the publication date of another citation or other special reason (as specified)

"O" document referring to an oral disclosure, use, exhibition or other means

"P" document published prior to the international filing date but later than the priority date claimed

"T" later document published after the international filing date or priority date and not in conflict with the application but cited to understand the principle or theory underlying the invention

"X" document of particular relevance; the claimed invention cannot be considered novel or cannot be considered to involve an inventive step when the document is taken alone

"Y" document of particular relevance; the claimed invention cannot be considered to involve an inventive step when the document is combined with one or more other such documents, such combination being obvious to a person skilled in the art

"&" document member of the same patent family

Date of the actual completion of the international search	Date of mailing of the international search report
10 November 2017	22/11/2017

Name and mailing address of the ISA/	Authorized officer
European Patent Office, P.B. 5818 Patentlaan 2 NL - 2280 HV Rijswijk Tel. (+31-70) 340-2040, Fax: (+31-70) 340-3016	King, Ruth

Form PCT/ISA/210 (second sheet) (April 2005)

INTERNATIONAL SEARCH REPORT

International application No
PCT/US2017/050156

C(Continuation). DOCUMENTS CONSIDERED TO BE RELEVANT

Category*	Citation of document, with indication, where appropriate, of the relevant passages	Relevant to claim No.
Y	US 3 998 935 A (ADAMS BEN E ET AL) 21 December 1976 (1976-12-21) cited in the application column 6, line 46 - line 53 -----	12,26

INTERNATIONAL SEARCH REPORT

Information on patent family members

International application No
PCT/US2017/050156

Patent document cited in search report	Publication date	Patent family member(s)	Publication date
SU 1527143 A1	07-12-1989	NONE	
CN 104876248 A	02-09-2015	NONE	
US 2013121900 A1	16-05-2013	CA 2855492 A1	23-05-2013
		CN 103930371 A	16-07-2014
		EP 2780286 A1	24-09-2014
		US 2013121900 A1	16-05-2013
		WO 2013074328 A1	23-05-2013
US 3998935 A	21-12-1976	NONE	