C. A. DIES.

PROCESS OF MAKING ELBOWS.

APPLICATION FILED FEB. 15, 1912. RENEWED SEPT. 30, 1916.

1,225,788.

Patented May 15, 1917.

3 SHEETS—SHEET 1.

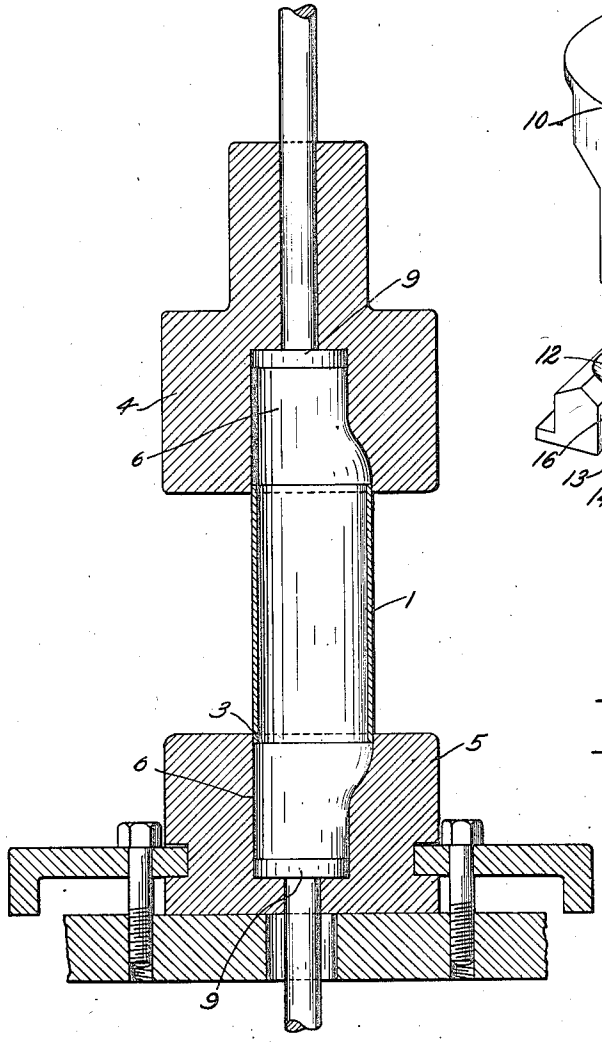

Fig. 1.

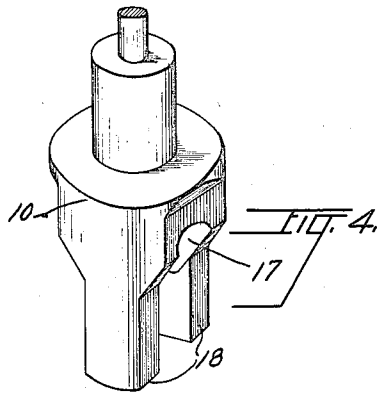

Fig. 4.

Fig. 5.

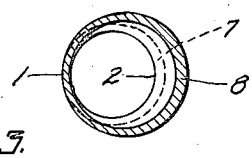

Fig. 3.

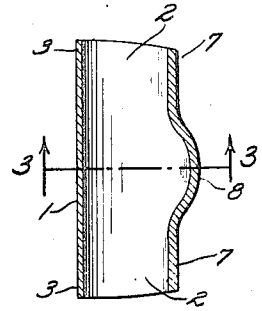

Fig. 2.

WITNESSES:

E. R. Walker

INVENTOR

Charles A. Dies.

By Clarence O'Brien

ATTORNEY

C. A. DIES.

PROCESS OF MAKING ELBOWS.

APPLICATION FILED FEB. 15, 1912. RENEWED SEPT. 30, 1916.

1,225,788.

Patented May 15, 1917.

3 SHEETS—SHEET 2.

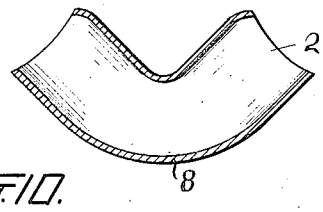

Fig. 10.

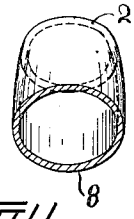

Fig. 11.

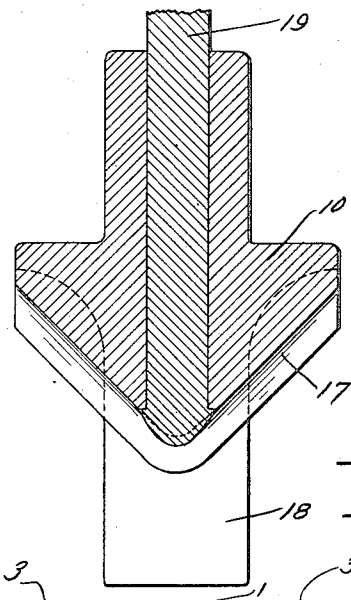

Fig. 6.

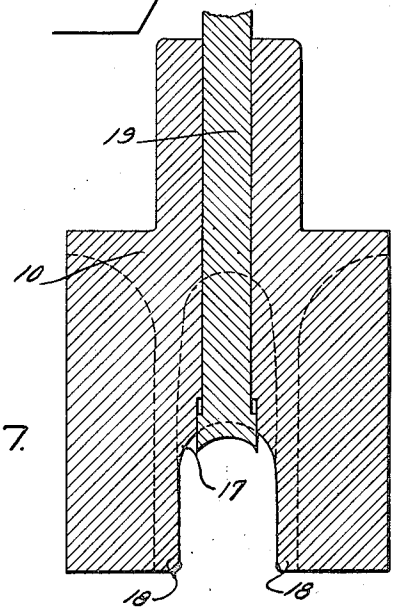

Fig. 7.

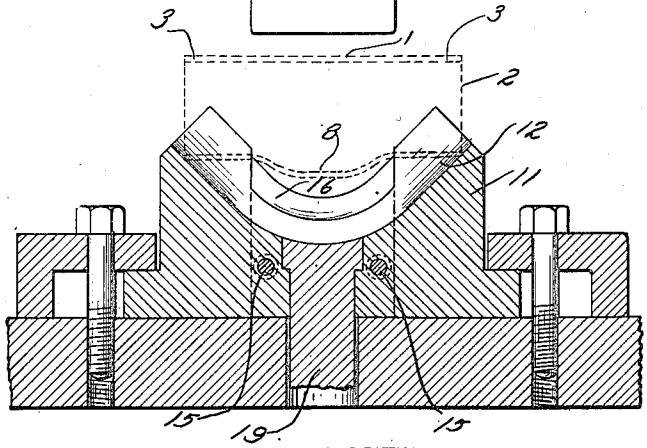

Fig. 8.

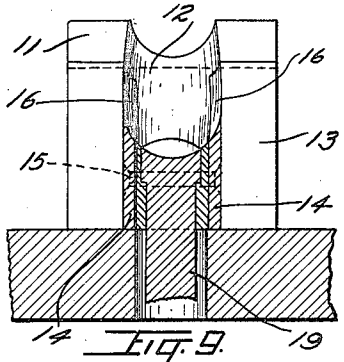

Fig. 9.

WITNESSES:

E. P. Walker

INVENTOR

Charles A. Dies.

By Clarence O'Brien

ATTORNEY

C. A. DIES.

PROCESS OF MAKING ELBOWS.

APPLICATION FILED FEB. 15, 1912. RENEWED SEPT. 30, 1916.

1,225,788. Patented May 15, 1917.

3 SHEETS—SHEET 3.

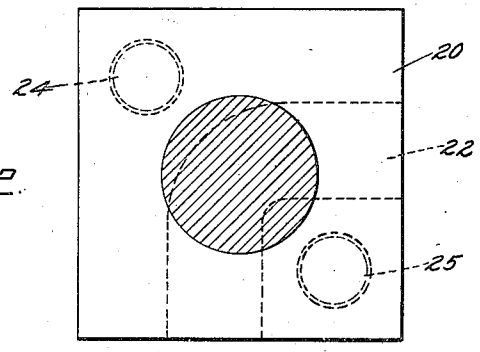

FIG. 12.

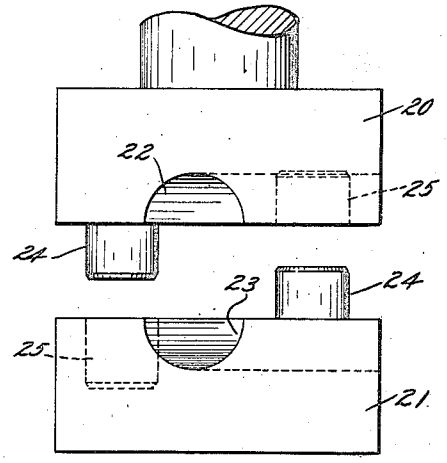

FIG. 13.

FIG. 14.

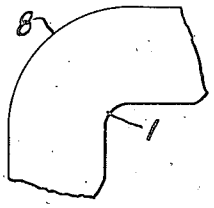

FIG. 16.

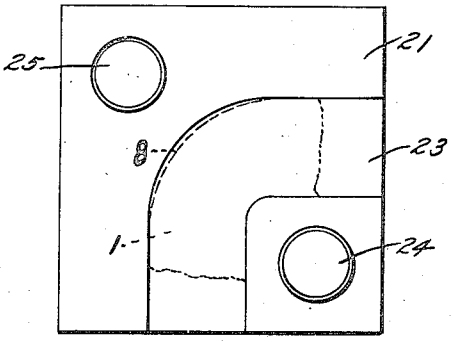

FIG. 15.

WITNESSES:

E. R. Walker

INVENTOR

Charles A. Dies.

By Clarence O'Brien

ATTORNEY

UNITED STATES PATENT OFFICE.

CHARLES A. DIES, OF CHICAGO, ILLINOIS, ASSIGNOR TO CLAYTON MARK, OF CHICAGO, ILLINOIS.

PROCESS OF MAKING ELBOWS.

1,225,788. Specification of Letters Patent. Patented May 15, 1917.

Application filed February 15, 1912, Serial No. 677,790. Renewed September 30, 1916. Serial No. 123,015.

To all whom it may concern:

Be it known that I, CHARLES A. DIES, a citizen of the United States, and residing at Chicago, in the county of Cook and State of Illinois, have invented a new and useful Improvement in the Process of Making Elbows, of which the following is a complete specification.

The main objects of this invention are to provide an improved process for making elbows adapted to greatly cheapen the product; to provide an improved process of making elbows from tubular stock; to provide an improved process of making elbows whereby elbows of great strength may be formed from comparatively light stock; to provide a process of making elbows by means of dies to form the stock but without the use of any internal means to hold the stock in place; and to provide a process of making elbows by means of which a perfectly formed, strong and durable product may be turned out with great rapidity.

A specific embodiment of the invention is illustrated in the accompanying drawings, in which:

Figure 1 is a longitudinal section of the reducing punch and die with a blank therein ready to be operated upon.

Fig. 2 is a longitudinal section of the blank after the reducing operation.

Fig. 3 is a section taken on line 3—3 of Fig. 2.

Fig. 4 is a perspective view of the bending punch.

Fig. 5 is a perspective view of the bending die.

Fig. 6 is a longitudinal central section of the bending punch taken between the pilot jaws.

Fig. 7 is a longitudinal central section of the bending punch taken through the pilot jaws.

Fig. 8 is a longitudinal section of the bending die.

Fig. 9 is a transverse section of the bending die.

Fig. 10 is a longitudinal section of the blank after being operated upon by the bending punch and die.

Fig. 11 is a transverse section of the blank shown in Fig. 10.

Fig. 12 is a plan view of the sizing punch.

Fig. 13 is a side elevation of the sizing punch.

Fig. 14 is a side elevation of the sizing die.

Fig. 15 is a plan view of the sizing die.

Fig. 16 is a side elevation of the blank after being operated upon by the sizing punch and die.

In carrying out the process shown, a tubular section or blank 1 of steel, or other preferred metal, is selected, which is preferably of a uniform diameter and thickness throughout, and its end portions 2 are reduced in diameter, as shown in Figs. 2 and 3. Said reductions are accomplished by squeezing or compressing the metal on sides of the blank except the side or portion 3 thereof, the greatest compression being performed on the side of the blank diametrically opposite from the uncompressed portion 3 and gradually decreasing in each direction toward said uncompressed portion 3.

In order to accomplish the above mentioned reductions of the ends of the blank, a punch 4 and a die 5 are provided, each of which has a bore or seat 6 therein of a size and shape at its outer end to receive the unreduced end of the blank 1. Each seat 6 is restricted more or less abruptly for a portion of its length from its outer end inwardly on all sides but one thereof, the side or portion of the seat having the greatest amount of restriction being diametrically opposite from the unrestricted side. The inner end of the seat is therefore of less diameter than the outer portion thereof and is axially off center with respect thereto.

When the punch is moved toward the die it forces the ends of the blank into said seats and the restricted portions of the seats compress the stock in the contiguous sides or parts of the blank, with the result that the compressed portions 7 of the blank as well as the intermediate unreduced portions 8 thereof are slightly thickened and contain more stock than do the unreduced portions of the ends due to the movement or displacement of the metal under the action of the reducing punch and die.

When the punch 4 is retracted from the die 5 the ejectors 9 eject the blank therefrom in the usual manner.

The next operation in the process is to bend the blank 1 to the desired angle for the elbow. The elbow herein shown is a 90 degree elbow, though elbows of other angles

may be constructed equally well by the process.

For the purpose of bending the blank to the desired angle a bending punch 10 and a bending die 11 are provided. The bending die 11 comprises a block of metal having a longitudinally and transversely concaved seat 12 in its upper surface, the longitudinal curvature of which is adapted to impart the desired angle to the blank. The die 11 is provided in each side thereof, at the sides of the seat 12, with a pilot groove 13, and seated in the sides of the die at the inner ends or backs of the grooves 13 are the steel protecting or expansion plates 14 which are held in place by the rivets 15 passing through the body of the die. The plates 14 set into the sides of the seat 12 and the upper edges of said plates are shaped to conform to the parts of the seat which they displace. The plates 14 are permitted a very slight outward movement on the rivets so as to yield slightly when the blank is being bent and thereby prevent the edges of the seat 12 breaking should there be slight variations in the size of the blank and also to permit the blank to assume the proper cross-sectional curvature. The seat 12 is also of slightly greater width at its center than at its ends, as shown more clearly in Fig. 9, so as to permit the stock of the blank 1 to move toward the center and expand the blank laterally at its central portion during the bending operation, and thereby insure the complete filling of the dies in the last or sizing operation. Such lateral expansion is due to the fact that in bending the blank the central portion 8 tends to flatten longitudinally of the blank, or rather bend on a longer radius than that of the finished elbow, as shown more clearly in Fig. 10.

The bending punch 10 is provided on its under side with a transversely concaved seat 17 which is shaped longitudinally to conform to the inner or shorter angle of the elbow. On each side of the seat 17 is a downwardly directed pilot jaw 18, adapted, as the punch descends, to enter the pilot grooves 13 and back up or support the expansion plates 14, and also support the sides of the blank against too great lateral expansion. The seat 17 is also of slightly greater width at its central portion than at its ends to conform to the seat 12 of the die 11, and its depth is slightly less than that of the seat 12, so that it will cause the blank to assume a slightly elliptical shape in cross section. After the bending operation the blank is slightly more elliptical at its center than at its ends, as shown more clearly in Fig. 11.

The blank 1 is placed in the die 11 with the reduced portions of its ends downwardly or lying in the seat 12, and when the punch 10 is brought onto the blank it forms the blank to the shape shown in Figs. 10 and 11. The punch 10 and die 11 are provided with ejectors 19 adapted to eject the blank therefrom after the bending operation.

After the bending operation has been completed the blanks are ready for the sizing or truing operation to bring them to the proper uniform size throughout. For the purpose of sizing the blank the sizing punch 20 and the sizing die 21 are provided with seats 22 and 23, respectively, in their contiguous faces, which seats are semi-circular in cross section and of uniform size throughout their lengths, and are formed in the exact angle desired for the completed elbow.

The punch 20 and the die 21 are each provided with a guide pin 24 in register with and adapted to enter an aperture 25 in the other, to hold the punch and die in unvarying relation to each other when in operation.

The operation of the process shown and described is as follows: When the blank 1 is placed in the reducing die 5 and the reducing punch is brought down onto it, one end of the blank is forced into the seat 6 of the die and the other end of the blank is forced into the seat 6 in the punch, thereby forming the reduced or restricted ends 2 which are axially offset in the same direction from the longitudinal axes of the blank. The reducing operation thickens the stock on the sides of the blank where the reduction takes place, as well as in the intermediate portion 8, so as to compensate for a slight drawing of the metal along the long side of the elbow during the bending operation, and thereby render the walls of the finished elbow of uniform thickness throughout.

After the reducing operation the blank is laid in the bending die 11 with the portion 8 thereof downwardly, and when the punch 10 is brought into contact with the blank, the latter is bent centrally to the desired angle. Since the seats 12 and 17 are slightly larger at their centers than at their ends, the blank is permitted to expand laterally and contract vertically at its central portion, as shown in Figs. 10 and 11, so as to insure the complete filling of the dies in the sizing operation.

After the bending operation the blank is placed in the sizing die and when the sizing punch is brought against the same the blank is brought to a uniform size throughout its length. When the blank is placed in the sizing die the long side 8 of the blank is out of contact with the long side of the angle of the seat 23, as shown more clearly in Fig. 15, and the remaining portion of the blank fits loosely in the seat. When the punch 20 is brought against the blank, the latter is brought back to cylindrical form and the stock flows toward the sides completely fill-

ing the dies and making the elbow of uniform size.

The ends of the blank may be trimmed off in any desired manner, and beaded and threaded.

It will be noticed that in none of the operations on the blank is any internal supporting means required to support the stock. In the bending operation the elongation of the long side of the angle and the tendency to form an elliptical cross sectional shape prevent collapse of the stock.

While but one specific embodiment of the invention has been herein shown and described it will be understood that many details of the process described may be varied or omitted without departing from the scope of the claims.

I claim:

1. The process of making elbows, comprising reducing the ends of a tubular blank and thickening the walls of that side of the blank designed to form the long side of the elbow, then bending the blank centrally to the desired angle.

2. The process of making elbows, comprising thickening by compression (in varying degrees from ends toward the center) the stock along one side of a tubular blank, then bending the blank toward the opposite side to the desired angle.

3. The process of making elbows, comprising reducing the ends of a tubular blank, bending the blank to the desired angle and forming it to an elliptical cross sectional shape, then truing the blank to a uniform diameter.

4. The process of making elbows, comprising bending an internally unsupported tubular blank to the desired angle, and reducing it to an elliptical cross sectional shape, then sizing the blank to bring it to a uniform diameter.

5. The process of making elbows, comprising reducing the diameter of the ends of a tubular blank and thickening the walls of one side of the blank, bending the blank to the desired angle with the thickened walls forming the long side of the angle and shaping the blank to an elliptical form, then truing the blank to a uniform diameter.

6. The process of making elbows, comprising bending a tubular blank to the desired angle and forming it to an elliptical cross sectional shape with greater ellipticity at its center than at its ends, then shaping the blank to a uniform diameter.

7. The process of making elbows, comprising reducing the ends of a tubular blank from one side of the blank, bending the internally unsupported blank to the desired angle in a direction opposite from the reduced portion and expanding the blank laterally, then shaping the blank to a uniform diameter throughout.

CHARLES ALBERT DIES.

Witnesses:
ESTHER DAUGHERTY,
CLARENCE MARK.