AUSTRALIA
PATENTS ACT 1952

DECLARATION IN SUPPORT OF AN APPLICATION FOR A PATENT

In support of an application made by:
SEKISUI KOJI KABUSHIKI KAISHA and KONAN DENKI KABUSHIKI KAISHA
for a patent for an invention entitled:
AUTOMATIC WATER SPRINKLER CONTROL SYSTEM
We, Denzo OKABE of c/o SEKISUI KOJI KABUSHIKI KAISHA of 5-2, Dojima 1-chome, Kita-ku, Osaka-shi, Osaka 530 JAPAN and Shigeta SUGITANI of c/o KONAN DENKI KABUSHIKI KAISHA of 4-97, Uedahigashimachi, Nishinomiya-shi, Hyogo 663 JAPAN
do solemnly and sincerely declare as follows:

1. We are authorised by the above mentioned applicants for the patent to make this declaration on ~~xxx behalfxx~~ their respective behalves.

2. The name and address of each actual inventor of the invention is as follows:
Name: Harushi YAMAMOTO
Address: c/o SEKISUI KOJI KABUSHIKI KAISHA, 5-2, Dojima 1-chome, Kita-ku, Osaka-shi, Osaka 530 JAPAN
Name: Naoki OTSUKA
Address: c/o KONAN DENKI KABUSHIKI KAISHA, 4-97, Uedahigashimachi, Nishinomiya-shi, Hyogo 663 JAPAN

The facts upon which the applicants are entitled to make this application are as follows:
The applicants are the assignees of the actual inventors.

The basic application as defined by Section 141 of the Act was made as follows:

Appln.No.	Country	Filing Date	Name of Applicants
AT.63/214491	Japan	29 August 1988	SEKISUI KOJI KABUSHIKI KAISHA and KONAN DENKI KABUSHIKI KAISHA

The basic application referred to in the preceding paragraph was the first application made in a Convention country in respect of the invention the subject of this application.

Declared at Osaka, Japan
this 7th day of May 1990

Signed Denzo Okabe
Position: President, SEKISUI KOJI KABUSHIKI KAISHA

Declared at Nishinomiya, Hyogo, Japan
this 10th day of May 1990

Signed S. Sugitani
Position: President, KONAN DENKI KABUSHIKI KAISHA

(12) PATENT ABRIDGMENT (11) Document No. AU-B-40772/89
(19) AUSTRALIAN PATENT OFFICE (10) Acceptance No. 629565

(54) Title
AUTOMATIC WATER SPRINKLER CONTROL SYSTEM

International Patent Classification(s)
(51)[5] **A01G 025/16**

(21) Application No. : **40772/89** (22) Application Date : **28.08.89**

(87) PCT Publication Number : **WO90/01868**

(30) Priority Data

(31) Number	(32) Date	(33) Country
63-214491	**29.08.88**	**JP JAPAN**

(43) Publication Date : **23.03.90**

(44) Publication Date of Accepted Application : **08.10.92**

(71) Applicant(s)
SEKISUI KOJI KABUSHIKI KAISHA; KONAN DENKI KABUSHIKI KAISHA

(72) Inventor(s)
HARUSHI YAMAMOTO; NAOKI OTSUKA

(74) Attorney or Agent
GRIFFITH HACK & CO. , GPO Box 4164, SYDNEY NSW 2001

(56) Prior Art Documents
US 3372899
AU 139277 16861/47 74.7 A01G

(57) Developed to overcome the above-mentioned drawbacks of the conventional system, the present invention has as its object to provide an automatic water sprinkler control system which, in at least some embodiments, does not require an extensive control wiring and, hence, enjoys reduced risk of damage to the wiring which is associated with the maintenance of water piping and, also, reduced risk of malfunctioning of control valves which is associated with such damages.

CLAIM

1. An automatic control system for a water sprinkler, including:

a main control means having a wireless communication equipment;

at least one water sprinkling means disposed in an area to be sprinkled with water and adapted to sprinkle water over the area;

water piping installed between a water source and the water sprinkling means, and adapted to distribute water from the water source to the water sprinkling means; and

.../2

a water sprinkling control means installed on the ground in a position close to the water sprinkling means and adapted to control the water sprinkling means, the water sprinkling control means comprising:

(a) an hydraulic valve disposed in said water piping in a position close to said sprinkling means, and having an inflow passageway, an outflow passageway and an internal cavity in which a diaphragm is moveable between a first position in which the outflow passageway is closed and a second position in which the outflow passageway is in fluid flow communication with the inflow passageway;

(b) a water channel interconnecting the inflow passageway with the internal cavity behind the diaphragm;

(c) a pilot line, separate from and having a greater cross-sectional area than the water channel, extending from the internal cavity;

(d) a two-way pilot solenoid valve connected at one port thereof to the distal end of the pilot line, and at the other port to drain piping, and adapted to control the hydraulic valve;

(e) a wireless signal receiving-transmitting means adapted to receive control signals from the main control means and to transmit answer signals to said main control means;

(f) a solenoid valve control means which is disposed in the vicinity of the two-way pilot solenoid valve, connected to said wireless signal receiving-transmitting means, and adapted to control said two-way pilot solenoid valve according to the control signals received by said wireless signal receiving means; and

(g) a power supply means for supplying electric power to the wireless signal receiving-transmitting means and said solenoid valve means;

.../3

the arrangement being such that, in use, when the pilot solenoid valve opens to put the pilot line in communication with the atmosphere via the drain piping the rate of flow through the pilot line exceeds that through the water channel, and the pressure in the internal cavity therefore reduces allowing the diaphragm to move from the first position to the second position, which movement also directly closes communication between the water channel and the pilot line; and when the pilot valve closes the pressure in the internal cavity increases allowing the diaphragm to move from the second position to the first position, which movement also directly restores communication between the water channel and the pilot line.

OPI DATE 23/03/90 APPLN. ID 40772 / 89
AOJP DATE 26/04/90 PCT NUMBER PCT/JP89/00874
PCT 629565
INTERNATIONAL APPLICATION PUBLISHED UNDER THE PATENT COOPERATION TREATY (PCT)

(51) International Patent Classification 5 :		(11) International Publication Number: WO 90/01868
A01G 25/16	A1	(43) International Publication Date: 8 March 1990 (08.03.90)

(21) International Application Number: PCT/JP89/00874

(22) International Filing Date: 28 August 1989 (28.08.89)

(30) Priority data:
63/214491 29 August 1988 (29.08.88) JP

(71) Applicants *(for all designated States except US)*: SEKISUI KOJI KABUSHIKI KAISHA [JP/JP]; 5-2, Dojima 1-chome, Kita-ku, Osaka-shi, Osaka 530 (JP). KONAN DENKI KABUSHIKI KAISHA [JP/JP]; 4-97, Uedahigashimachi, Nishinomiya-shi, Hyogo 663 (JP).

(72) Inventors; and
(75) Inventors/Applicants *(for US only)* : YAMAMOTO, Harushi [JP/JP]; Sekisui Koji Kabushiki Kaisha, 5-2, Dojima 1-chome, Kita-ku, Osaka-shi, Osaka 530 (JP). OTSUKA, Naoki [JP/JP]; Konan Denki Kabushiki Kaisha, 4-97, Uedahigashimachi, Nishinomiya-shi, Hyogo 663 (JP).

(74) Agent: KURAUCHI, Giro; 4-18, Nishitemma 4-chome, Kita-ku, Osaka-shi, Osaka 530 (JP).

(81) Designated States: AU, GB, KR, US.

Published
With international search report.

(54) Title: AUTOMATIC WATER SPRINKLER CONTROL SYSTEM

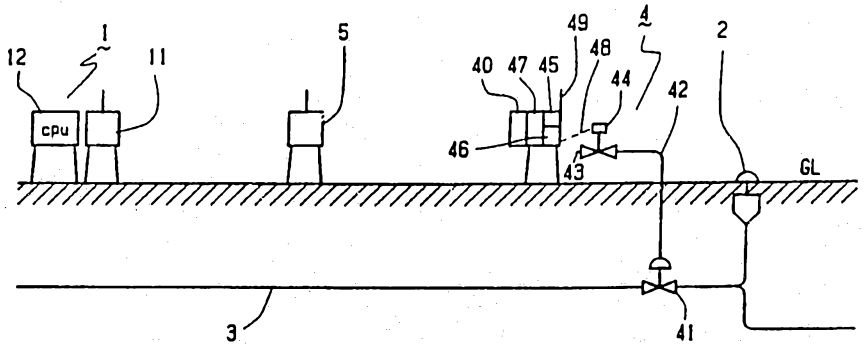

(57) Abstract

An automatic water sprinkler control system including a hydraulically operated valve (41) for controlling the supply of water from a water supply line (3) to a water-sprinkling means such as a sprinkler (2). This hydraulic valve is connected to a two-way pilot solenoid (44) valve via a pilot line (42) and the pressure of water in this pilot line is increased or decreased in response to the opening or closing of the two-way pilot solenoid valve to control the hydraulic valve. The above two-way pilot solenoid valve is opened and closed by a control signal transmitted wireless from a main controller (1).

DESCRIPTION

AUTOMATIC WATER SPRINKLER CONTROL SYSTEM

Technical Field

The present invention relates to an automatic water sprinkler control system to be used in comparatively large areas such as farm lands including orchards and truck farms, golf courses and so on.

Background Art

The hitherto-known system of this type comprises a multiplicity of water sprinkling means such as sprinklers as disposed in strategical positions, water pipes disposed in or on the ground and connecting said water sprinkling means with a valve means equipped with a solenoid valve as built into the water pipe in a position close to each of said water sprinkling means and a control wiring buried underground between said valve means and a control board installed in a control room or the like, with said valve means being opened and closed from said control board.

However, since the control wiring is buried underground in the above conventional system, there is the problem that when water lines are installed in the ground alongside the control wiring, the control wiring is sometimes damaged during the maintenance of the water lines. Moreover, in the case of a golf course, since the control wiring generally extends several kilometers, voltage drops and insulation failures tend to occur and there is consequently the additional drawback that a thunderbolt falling nearby damages the control wiring. Furthermore, when the control wiring is affected by

a thunderbolt or other cause, it is very difficult to locate the point of damage because of underground installation so that much time and labor are involved in inspection and repair work.

Developed to overcome the above-mentioned drawbacks of the conventional system, the present invention has as its object to provide an automatic water sprinkler control system which, in at least some embodiments, does not require an extensive control wiring and, hence, enjoys reduced risk of damage to the wiring which is associated with the maintenance of water piping and, also, reduced risk of malfunctioning of control valves which is associated with such damages.

It is a further object of the present invention to provide a system which, in some embodiments at least, requires only a short installation time and a short time for additional work if such work becomes necessary after initial installation, and involves little earth-moving work, thus being suitable for installations, such as golf courses, where damages to the ground surface are serious problems.

It is a still further object of the present invention to provide a system wherein, in some embodiments at least, the control valves can be operated positively and accurately even if air or dust enters into the pipeline.

AUSTRALIAN PATENT OFFICE

DISCLOSURE OF THE INVENTION

According to the present invention there is provided an automatic control system for a water sprinkler, including:

a main control means having a wireless communication equipment;

at least one water sprinkling means disposed in an area to be sprinkled with water and adapted to sprinkle water over the area;

water piping installed between a water source and the water sprinkling means, and adapted to distribute water from the water source to the water sprinkling means; and

a water sprinkling control means installed on the ground in a position close to the water sprinkling means and adapted to control the water sprinkling means, the water sprinkling control means comprising:

(a) an hydraulic valve disposed in said water piping in a position close to said sprinkling means, and having an inflow passageway, an outflow passageway and an internal cavity in which a diaphragm is moveable between a first position in which the outflow passageway is closed and a second position in which the outflow passageway is in fluid flow communication with the inflow passageway;

(b) a water channel interconnecting the inflow passageway with the internal cavity behind the diaphragm;

(c) a pilot line, separate from and having a greater cross-sectional area than the water channel, extending from the internal cavity;

(d) a two-way pilot solenoid valve connected at one port thereof to the distal end of the pilot line, and at the other port to drain piping, and adapted to control the hydraulic valve;

(e) a wireless signal receiving-transmitting means adapted to receive control signals from the main control means and to transmit answer signals to said main control means;

AUSTRALIAN PATENT OFFICE

(f) a solenoid valve control means which is disposed in the vicinity of the two-way pilot solenoid valve, connected to said wireless signal receiving-transmitting means, and adapted to control said two-way pilot solenoid valve according to the control signals received by said wireless signal receiving means; and

(g) a power supply means for supplying electric power to the wireless signal receiving-transmitting means and said solenoid valve means;

the arrangement being such that, in use, when the pilot solenoid valve opens to put the pilot line in communication with the atmosphere via the drain piping the rate of flow through the pilot line exceeds that through the water channel, and the pressure in the internal cavity therefore reduces allowing the diaphragm to move from the first position to the second position, which movement also directly closes communication between the water channel and the pilot line; and when the pilot valve closes the pressure in the internal cavity increases allowing the diaphragm to move from the second position to the first position, which movement also directly restores communication between the water channel and the pilot line.

The term "wireless" should be construed throughout the specification and claims to encompass any communications without connecting wire.

In the automatic water sprinkler control system of the present invention which includes no control wiring other than the lead wire between the solenoid valve control means and two-way pilot solenoid valve, and the hydraulic valve is controlled by the two-way pilot solenoid valve connected thereto through said pilot line, there is no trouble of the control wiring being damaged during maintenance of water piping and the possibility of the system attracting a

AUSTRALIAN PATENT OFFICE 27

lightening accident is also low.

Moreover, even if the electrical system is struck and damaged by lightning, restoration work is simple because no excavation work is necessary. Furthermore, since the lead wire between the solenoid valve control means and two-way pilot solenoid valve is the only control wiring present and, moreover, is not buried underground, the installation time can be very brief. Furthermore, since the water sprinkler control means is installed on the ground, even if a need arises for additional work after installation for adjustment or confirmation of sprinkling amount, for instance, the work does not take much time, nor is it nccessary to excavate the ground. Therefore, the system can be used advantageously in such installations as golf courses where the ground surface should not be damaged.

Moreover, even if there is an entry of air in the two-way pilot solenoid valve and in pilot line for controlling the hydraulic valve, the air is readily exhausted through the drain line connected to the two-way pilot solenoid valve. As a result, it does not happen that the response of the hydraulic valve is decreased, nor does a water hammer or the like take place, so that the reliability of the system as a whole is high. Furthermore, the hydraulic valve has a diaphragm and is opened and closed by this diaphragm. When this diaphragm is provided with a small-diameter passageway connecting the inflow passageway of said hydraulic valve with the passageway to which said pilot line is connected, the dust which may happen to be caught in the small-diameter passageway is easily dislodged by the motion of the diaphragm so that the passageway is not easily clogged and the

AUSTRALIAN PATENT OFFICE

possibility of troubles due to dust is reduced. Furthermore, when a two-position acting valve is used as said two-way solenoid valve, the control signal for controlling the solenoid valve can be a pulse signal and in this case it is not necessary to continuously supply electric energy to the solenoid valve so that the capacity of the power supply can be as much reduced to contribute to the conservation of energy.

When the hydraulic valve is provided with a water channel connecting the inflow passageway with the flow passageway to which said pilot line is connected, with said water channel being provided with an air bleeding orifice which can be opened and closed with respect to the atmosphere, the above removal of air is easily performed by this air bleeding orifice.

BRIEF DESCRIPTION OF THE DRAWINGS

Fig. 1 is a schematic view illustrating an automatic water sprinkler control system embodying the principle of the present invention;

Fig. 2 is a sectional elevation view showing an example of the hydraulic valve used in the present invention;

Fig. 3 is an exploded perspective view of the same valve;

Fig. 4 is a sectional view illustrating another example of the hydraulic valve used in the present invention; and

Fig. 5 is a sectional elevation view showing still another example of the hydraulic valve used in the present invention.

BEST MODE FOR CARRYING OUT THE INVENTION

AUSTRALIAN PATENT OFFICE

The present invention is described in further detail, reference being had to the accompanying drawings.

The automatic water sprinkler control system of the present invention comprises a main controller 1 as a main control means equipped with a wireless communications equipment 11, one or more water sprinkling means 2, for example sprinklers, which are disposed in an area to be sprinkled with water and adapted to sprinkle the area, a water line 3 which is buried in the ground between a water source (not shown) and said sprinkling means 2 and adapted to supply the sprinkling means 2 with water from said water source, and a sprinkler controller 4 which is disposed on the ground in the vicinity of said sprinkling means 2 and adapted to control the sprinkling means 2. The controller 4 comprises a hydraulic valve 41 disposed within said water line 3 in a position close to said sprinkling means 2, a two-way solenoid pilot valve 44, one port of which communicates with said hydraulic valve 41 through a pilot line 42, with the other port communicating with a water drain line 43, and which is adapted to control said hydraulic valve 41, a wireless signal receiver-transmitter 45 adapted to receive a control signal transmitted from said main controller 1 and to transmit an answer signal to said main controller 1, a solenoid valve controller 46 which is disposed in a position close to said two-way pilot solenoid valve 44 and connected to said signal receiver-transmitter 45 so as to control said two-way pilot solenoid valve 44 according to the control signal received by said signal receiver-transmitter 45, and a battery 47, which may comprise a solar cell 40, as a power source for said signal receiver-transmitter 45 and solenoid valve controller

AUSTRALIAN PATENT OFFICE

46.

Referring to Fig. 1, the reference numeral 5 represents a wireless relay which is installed when the system of the present invention is used in cases where a large tract of land is to be sprinkled or the landscape interferes with the propagation of electric signals. In this sense, the wireless relay 5 is not an indispensable unit.

The main controller 1 mentioned above is a unit for controlling the whole system and is generally installed in a control house or room. This controller 1 is equipped with a computer 12 in addition to said wireless communications equipment 11 and the required control data inclusive of sprinkling start and stop time data as inputted or previously stored in the computer 12 are transmitted from the wireless communications equipment 11.

Referring to the sprinkling means 2 mentioned above, tens to hundreds of units are generally installed taking a golf course as an example. It should be understood that the water sprinkling means to be used in the present invention need not be a sprinkler as such but may be a simple water delivery nozzle.

The aforementioned hydraulic valve 41 is installed in the water line 3 in a position close to the sprinkling means 2 for controlling the supply of water to the sprinkling means 2. While this hydraulic valve 41 may be of an optional design only if the valve may be opened and closed by utilizing changes in the pressure of water, the valves shown in Figs. 2 to 5 are preferably used.

Thus, the hydraulic valve 41 illustrated in any of Figs. 2 and 3 comprises an open-top body 413 having a dividing wall

AUSTRALIAN PATENT OFFICE

410 defining an inflow passageway 411 and an outflow passageway 412, an internal cavity 414 communicating with said inflow and outflow passageways 411, 412 and a pilot line coupling 415, a bonnet 416 mounted so as to cover the top opening of the body 413, a diaphragm 417 interposed between the body 413 and the bonnet 416 so as to block the top opening, an O-ring 418 interposed between the bottom periphery of said diaphragm 417 and the top periphery of said body 413, and a spring 419 interposed between said diaphragm 417 and said bonnet 416 and preenergizing said diaphragm 417 against the top opening of body 413, said diaphragm 417 having a small-diameter passageway 420 in a position adjacent to the inflow passageway 411 of body 413 so that the inflow passageway 411 of body 413 is communicating with the pilot line coupling 415 through said small-diameter passageway 420.

In the hydraulic valve 41 illustrated in Fig. 4, a water channel 421 connecting said inflow passageway 411 with said pilot line coupling 415 is formed through the body 413 and bonnet 416 in lieu of said small-diameter passageway 420 in said diaphragm 417 in the above embodiment.

The hydraulic valve 41 illustrated in Fig. 5 is such that the bonnet 416 snown in Fig. 4 is provided with a water channel 421 and an air bleeding orifice 422.

Of whichever of the above constructions, the hydraulic valve 41 is such that its inflow passageway 411 communicates with the pilot line coupling 415 at all times and when the two-way pilot solenoid valve 44 connected to the pilot line 42 is in open position, the water in the inflow passageway 411 flows into the pilot line coupling 415 through said passageway 420 or water channel 421 and is discharged from

AUSTRALIAN PATENT OFFICE

the drain line 43 connected to the two-way pilot solenoid valve 44. Therefore, in this condition the hydraulic pressure in the pilot line 42 and the cavity 414 of the bonnet 416 of the hydraulic valve 41 is substantially nil, with the result that the diaphragm 417 is pushed by water pressure toward the bonnet 416 overcoming the resilient biasing force of said spring 419. In consequence, the inflow passageway 411 is brought into communication with the outflow passageway 412 so that the water flows from the inflow passageway 411 to the outflow passageway 412. On the contrary, when the two-way pilot solenoid valve 44 is in closed position, there is no drainage of water from the drain line 43 connected to the solenoid valve 44 so that the hydraulic pressure within the pilot line 42 and the internal cavity 414 of bonnet 416 is increased. As a consequence, the diaphragm 417 is pushed toward the body 413 to block the communication between the inflow passageway 411 and outflow passageway 412. While the above open-and-close operation is repeated, the pilot line 42 is full of water at all times.

The above-mentioned pilot solenoid valve is a valve operated by a solenoid. This solenoid valve 44 is connected, at one end thereof, to said pilot line 42 and, at the other end, to the drain line 43. The free end of the drain line 43 discharges into a drain gutter or the ground. The two-way pilot solenoid valve 44 is installed on the ground or in a box set at ground level.

The solenoid valve controller 46 mentioned hereinbefore controls the open-and-close operation of the two-way pilot solenoid valve 44. This solenoid valve controller 46 is disposed near said two-way pilot solenoid valve 44 and

AUSTRALIAN PATENT OFFICE

connected thereto through a lead wire 48. The lead wire 48 is preferably as short as possible.

The operation of the automatic water sprinkler control system of the present invention is explained below.

As a control signal instructing the sprinkling of water is transmitted from the wireless communications equipment 11 of the main controller 1, this signal is relayed by the relay 5 and received by an antenna 49 of the signal receiver-transmitter 45 of the sprinkler controller 4. The relay 5 receiving a station group code transmits a similar control signal to the sprinkler controller 4 within the corresponding group.

Having received the above-mentioned control signal, the solenoid valve controller 46 feeds an electric current according to the control signal to the two-way pilot solenoid valve 44 via the lead wire 48. Thereupon the two-way pilot solenoid valve 44 is opened. Then, the water in the pilot line 42 is drained from the drain line 43 via the solenoid valve 44 so that the hydraulic pressure in the pilot line 42 and the internal cavity 414 of the bonnet 416 of the hydraulic valve 41 is substantially reduced to zero. Consequently, the diaphragm 417 is pushed by the hydraulic pressure toward the bonnet 416 against the residency of the spring 419. As a result, the inflow passageway 411 is brought into communication with the outflow passageway 412 and the water flows from the inflow passageway 411 to the outflow passageway 412 so that the water is delivered from the sprinkler 2. Then, the wireless receiver-transmitter 45 transmits an answer signal indicating the start of water sprinkling to the main controller 1. If something is wrong

AUSTRALIAN PATENT OFFICE

with the two-way pilot solenoid valve 44 and/or the hydraulic valve 41, the wireless receiver-transmitter 4 transmits an answer signal indicating the valve trouble to the main controller 1.

When a control signal instructing the stop of water sprinkling is transmitted from the main controller 1 and received by the antenna 49 of the signal receiver 45, the solenoid valve controller 46 arrests the flow of an electric current to the two-way pilot solenoid valve 44 to close the solenoid valve 44. Thereupon the drain of water from the drain line 43 connected to the solenoid valve 44 stops and the hydraulic pressure in the pilot line 42 and the internal cavity 414 of the bonnet 416 is increased. As a result, the diaphragm 417 is pressed toward the body 413 and the inflow passageway 411 is secluded from the outflow passageway 412 again, whereby the sprinkling of water from the sprinkler 2 is suspended. Then, the wireless receiver-transmitter 45 transmits an answer signal indicating the stop of water sprinkling to the main controller 1.

AUSTRALIAN PATENT OFFICE

THE CLAIMS DEFINING THE INVENTION ARE AS FOLLOWS:

1. An automatic control system for a water sprinkler, including:

a main control means having a wireless communication equipment;

at least one water sprinkling means disposed in an area to be sprinkled with water and adapted to sprinkle water over the area;

water piping installed between a water source and the water sprinkling means, and adapted to distribute water from the water source to the water sprinkling means; and

a water sprinkling control means installed on the ground in a position close to the water sprinkling means and adapted to control the water sprinkling means, the water sprinkling control means comprising:

(a) an hydraulic valve disposed in said water piping in a position close to said sprinkling means, and having an inflow passageway, an outflow passageway and an internal cavity in which a diaphragm is moveable between a first position in which the outflow passageway is closed and a second position in which the outflow passageway is in fluid flow communication with the inflow passageway;

(b) a water channel interconnecting the inflow passageway with the internal cavity behind the diaphragm;

(c) a pilot line, separate from and having a greater cross-sectional area than the water channel, extending from the internal cavity;

(d) a two-way pilot solenoid valve connected at one port thereof to the distal end of the pilot line, and at the other port to drain piping, and adapted to control the hydraulic valve;

(e) a wireless signal receiving-transmitting means adapted to receive control signals from the main control means and to transmit answer signals to said main control means;

(f) a solenoid valve control means which is disposed in the vicinity of the two-way pilot solenoid valve, connected to said wireless signal receiving-transmitting means, and adapted to control said two-way pilot solenoid valve according to the control signals received by said wireless signal receiving means; and

(g) a power supply means for supplying electric power to the wireless signal receiving-transmitting means and said solenoid valve means;

the arrangement being such that, in use, when the pilot solenoid valve opens to put the pilot line in communication with the atmosphere via the drain piping the rate of flow through the pilot line exceeds that through the water channel, and the pressure in the internal cavity therefore reduces allowing the diaphragm to move from the first position to the second position, which movement also directly closes communication between the water channel and the pilot line; and when the pilot valve closes the pressure in the internal cavity increases allowing the diaphragm to move from the second position to the first position, which movement also directly restores communication between the water channel and the pilot line.

2. An automatic control system according to claim 1 wherein the water channel is provided with an air bleeding orifice which can be opened and closed with respect to the atmosphere.

PATENT OFFICE

3. An automatic control system according to claim 1 or claim 2 wherein the water channel comprises a small diameter passageway formed in a flexible portion of the diaphragm.

4. An automatic control system substantially as herein described with reference to the accompanying drawings.

DATED this 28th day of April 1992

SEKISUI KOJI KABUSHIKI KAISHA

and

KONAN DENKI KABUSHIKI KAISHA

By their Patent Attorneys

GRIFFITH HACK & CO.

AUSTRALIAN PATENT OFFICE

Fig 1

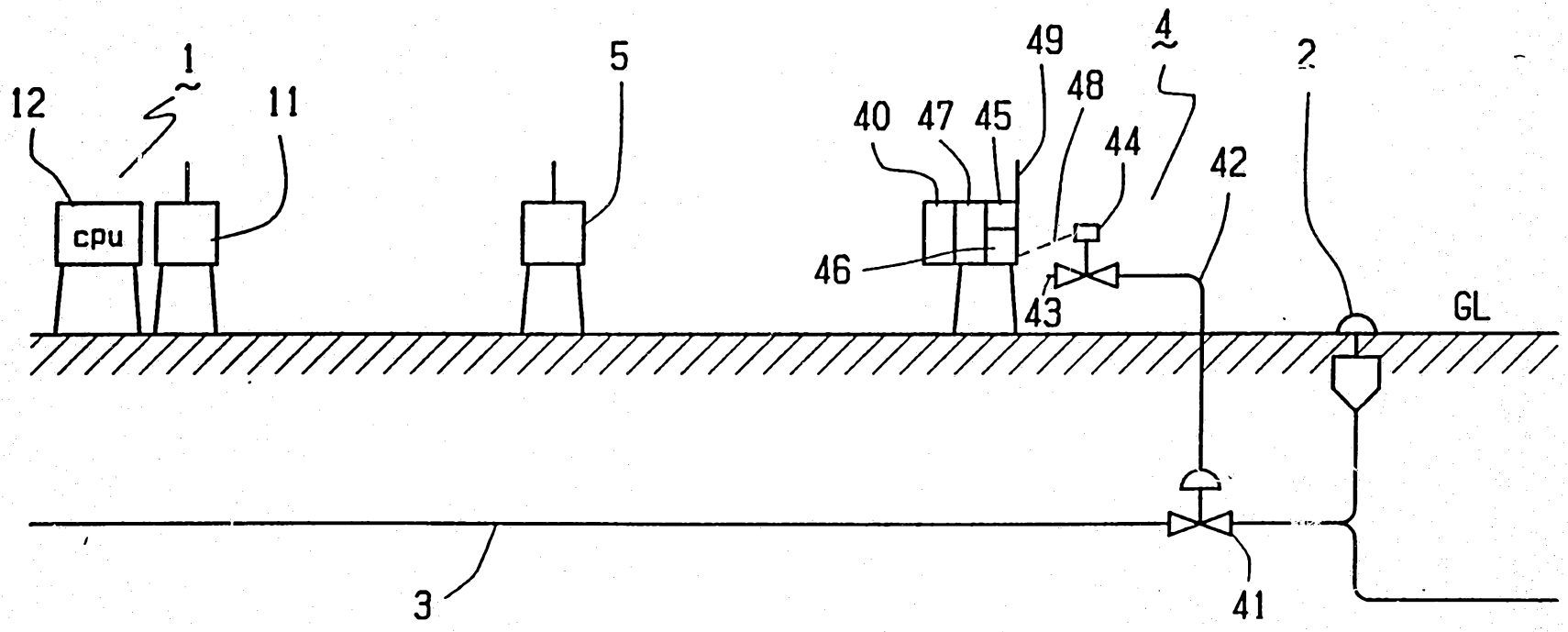

FiG 2

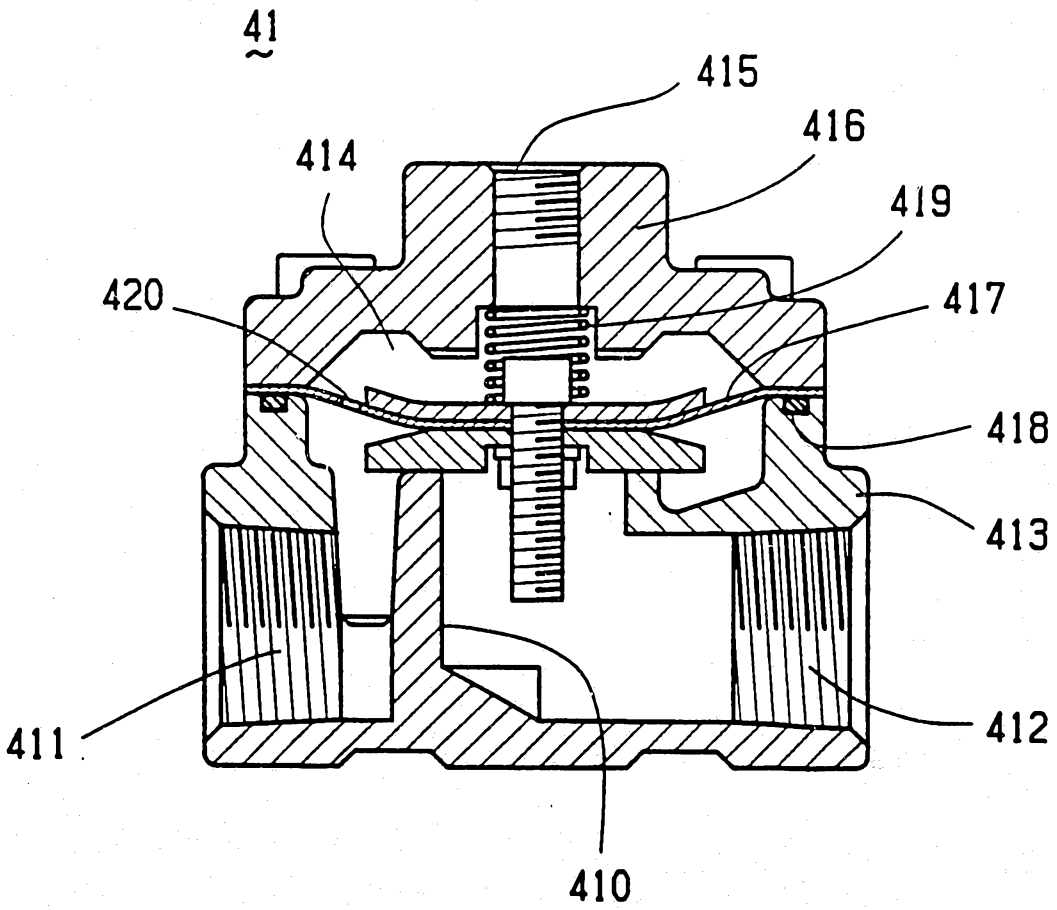

Fig 3

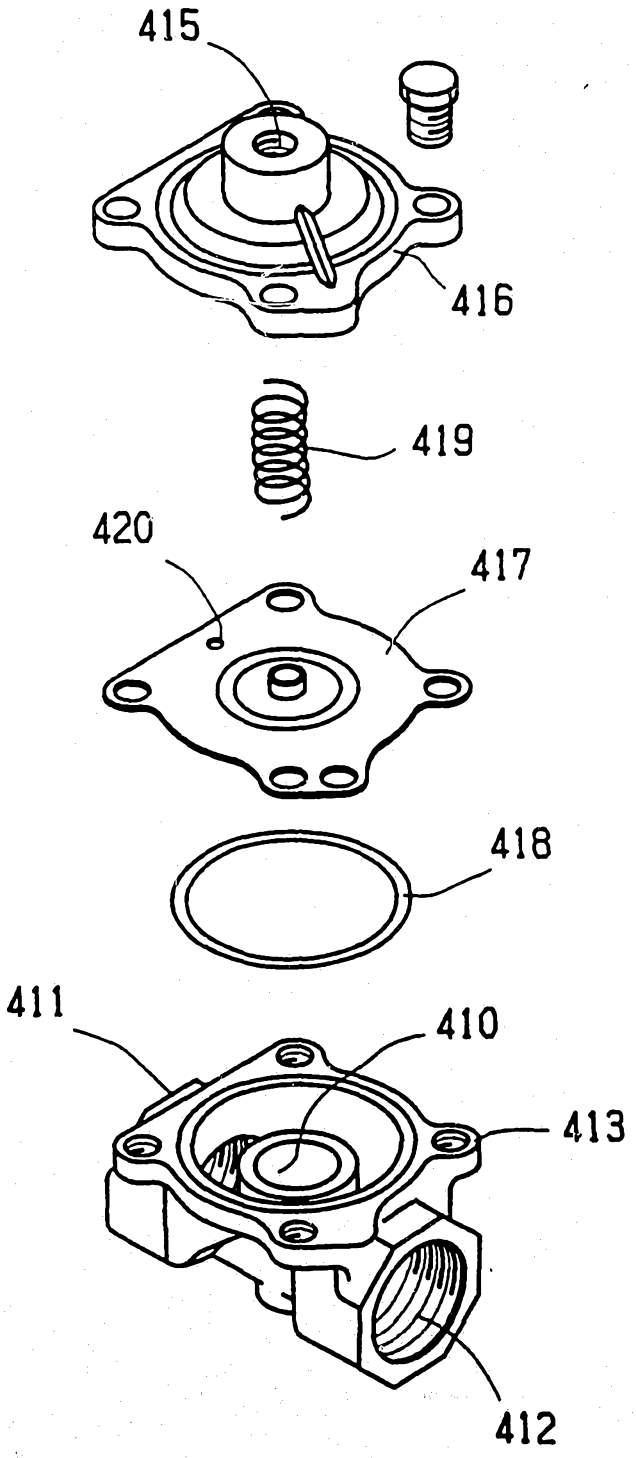

Fig 4

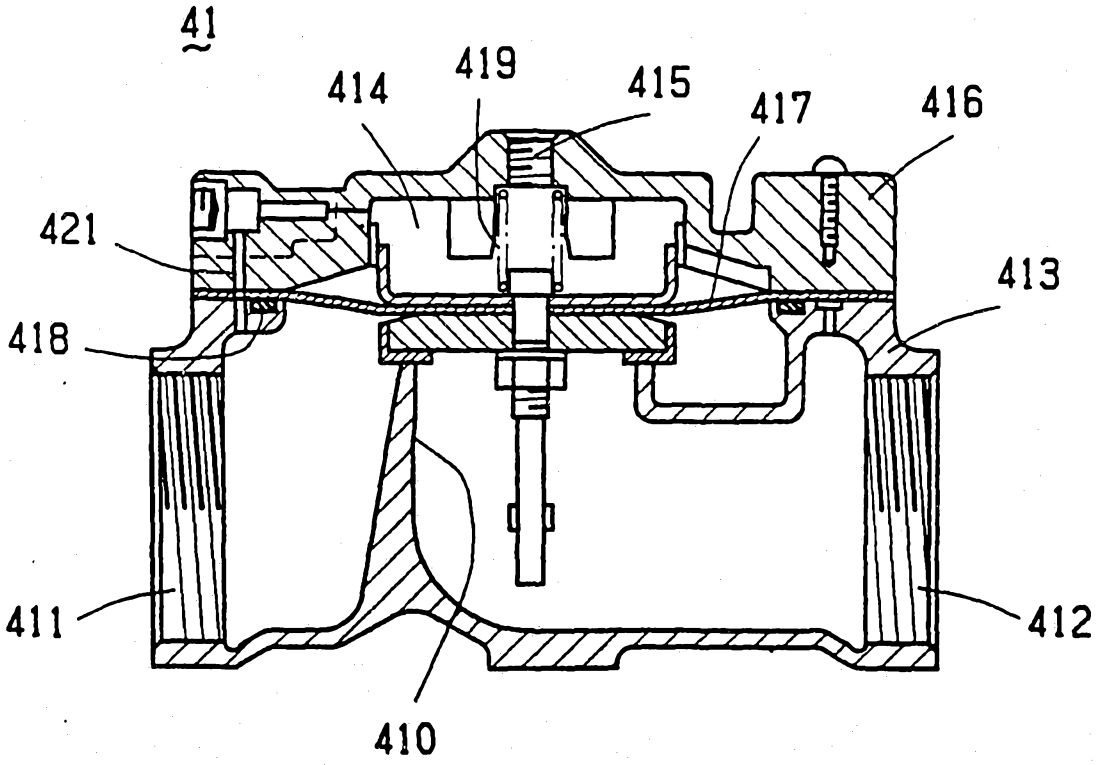

Fig 5

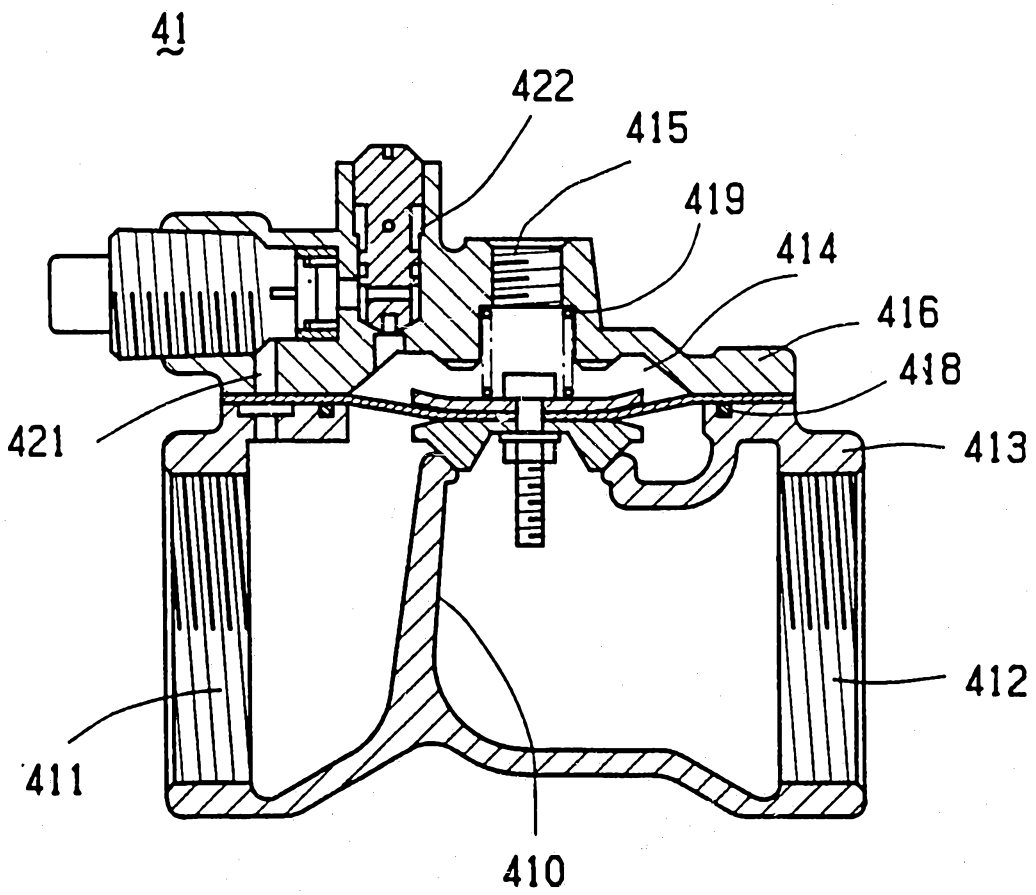

INTERNATIONAL SEARCH REPORT

International Application No PCT/JP 89/00874

I. CLASSIFICATION OF SUBJECT MATTER (if several classification symbols apply, indicate all)[6]

According to International Patent Classification (IPC) or to both National Classification and IPC

Int.Cl. 5 A01G25/16

II. FIELDS SEARCHED

Minimum Documentation Searched[7]

Classification System	Classification Symbols
Int.Cl. 5	A01G

Documentation Searched other than Minimum Documentation to the Extent that such Documents are Included in the Fields Searched[8]

III. DOCUMENTS CONSIDERED TO BE RELEVANT[9]

Category[10]	Citation of Document,[11] with indication, where appropriate, of the relevant passages[12]	Relevant to Claim No.[13]
X	US,A,3372899 (MC PHERSON) 12 March 1968 see the whole document	1, 3-5
Y		2
Y	DE,A,2836415 (SOLAR PRODUCT PROMOTIONS) 08 March 1979 see page 7, last paragraph - page 8, last paragraph; figures 3-4	2
A	DE,A,2707219 (WASSERTECHNIK WOLLNY) 04 January 1979 see page 12, last paragraph - page 17, paragraph 1; figures 1, 2	1
A	US,A,4603832 (SJOQUIST) 05 August 1986 see the whole document	1, 3, 4

[10] Special categories of cited documents :

"A" document defining the general state of the art which is not considered to be of particular relevance

"E" earlier document but published on or after the international filing date

"L" document which may throw doubts on priority claim(s) or which is cited to establish the publication date of another citation or other special reason (as specified)

"O" document referring to an oral disclosure, use, exhibition or other means

"P" document published prior to the international filing date but later than the priority date claimed

"T" later document published after the international filing date or priority date and not in conflict with the application but cited to understand the principle or theory underlying the invention

"X" document of particular relevance; the claimed invention cannot be considered novel or cannot be considered to involve an inventive step

"Y" document of particular relevance; the claimed invention cannot be considered to involve an inventive step when the document is combined with one or more other such documents, such combination being obvious to a person skilled in the art.

"&" document member of the same patent family

IV. CERTIFICATION

Date of the Actual Completion of the International Search	Date of Mailing of this International Search Report
17 NOVEMBER 1989	15. 12. 89
International Searching Authority	**Signature of Authorized Officer**
EUROPEAN PATENT OFFICE	HERYGERS J.J.

Form PCT/ISA/210 (second sheet) (January 1985)

ANNEX TO THE INTERNATIONAL SEARCH REPORT ON INTERNATIONAL PATENT APPLICATION NO. PCT/JP 89/00874

SA 30672

This annex lists the patent family members relating to the patent documents cited in the above-mentioned international search report.
The members are as contained in the European Patent Office EDP file on
The European Patent Office is in no way liable for these particulars which are merely given for the purpose of information. 17/11/89

Patent document cited in search report	Publication date	Patent family member(s)	Publication date
US-A-3372899		None	
DE-A-2836415	08-03-79	AU-A- 3912778 US-A- 4256133	28-02-80 17-03-81
DE-A-2707219	04-01-79	None	
US-A-4603832	05-08-86	None	