Dec. 14, 1926. 1,610,742

C. BÜCKING

MANUFACTURE OF PAPER

Filed July 22, 1925

Fig. 1.

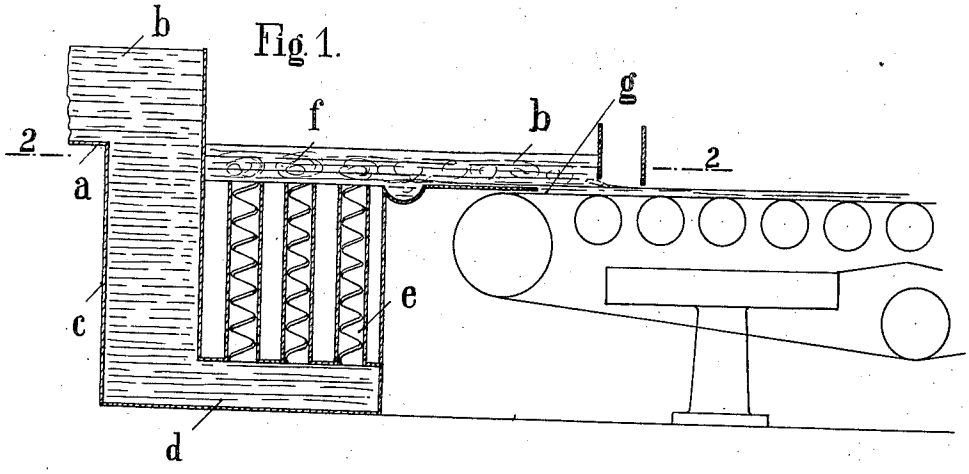

Fig. 2.

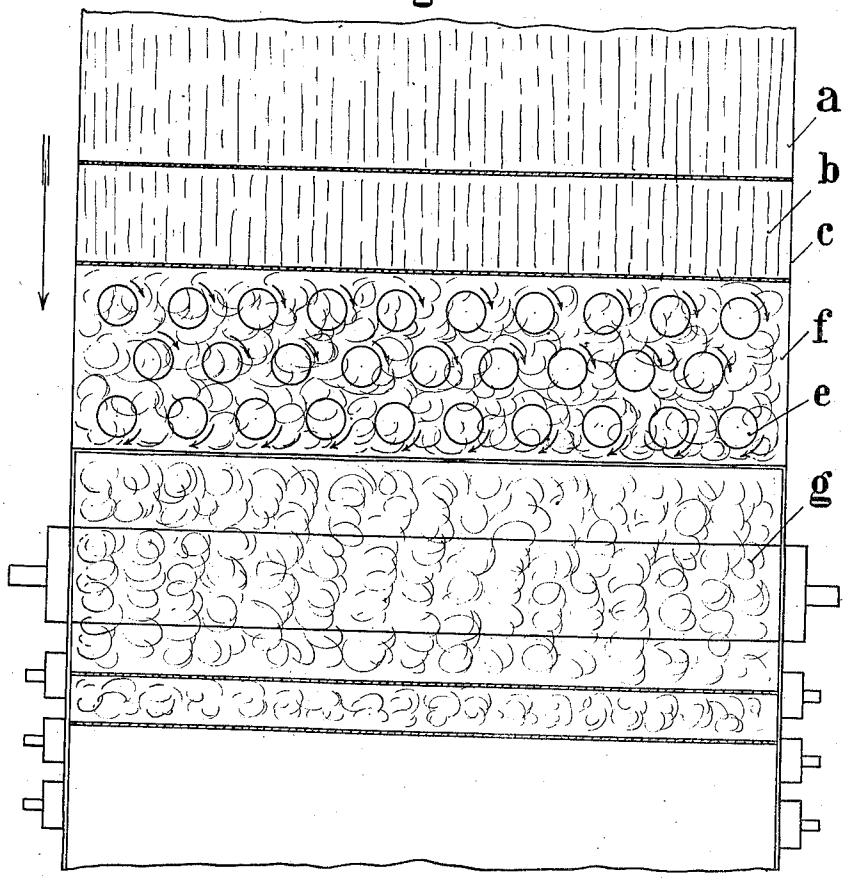

Inventor:
Carl Bücking.
per
Attorney.

Patented Dec. 14, 1926. 1,610,742

UNITED STATES PATENT OFFICE.

CARL BÜCKING, OF OBERLESCHEN, GERMANY.

MANUFACTURE OF PAPER.

Application filed July 22, 1925, Serial No. 45,312, and in Germany July 25, 1924.

This invention has reference to improvements in the manufacture of paper, and it is particularly intended to devise means of overcoming the inequalities of strength in various directions of the paper which are mainly due to the fact that in the ordinary course of manufacture the fibres are caused to lie mainly in one and the same direction. This is particularly true of the papers manufactured by machinery in which a continuous web of paper is caused to be deposited on an endless wire-cloth. With this method of manufacturing there is the drawback that the fibres on flowing upon the sieve or wire-cloth are mainly caused to follow the direction of flow and of the movement of the sieve, so that they will be caused to be deposited substantially in the parallel direction with relation to each other and to the direction of movement of the sieve; and in this position the fibres will remain in the finished paper. As a result thereof the strength of the paper is considerably greater in the longitudinal direction thereof as compared with its resistency in the transverse direction.

Attempts have already been made to obviate this difficulty by producing a vibration of the sieve or wire-cloth or by the shaking of the stuff box or by disturbing the tendency of longitudinal depositing of the fibres by imparting a gentle reciprocating agitating or so to speak weaving movement to the liquid stuff during its settling upon the sieve. However, by proceeding in this manner it has only been possible to produce a slight increase of the tearing resistency of the paper at right angle to its movement. It has also been proposed to produce whirls in the paper pulp before settling.

Now in accordance with my invention these difficulties are obviated by the fact that a very effective whirling or eddying movement is produced in the dilute pulp liquor before and during the depositing thereof upon the sieve and in such a manner that the whirling or twisting axes of the eddies or whirls will be substantially at right angle to the plane of flow of the pulp. In the practice of my invention it has been ascertained that it is preferable to produce a plurality of comparatively small whirls, so as to obtain as complete a distribution of the fibres of the pulp as possible. The production of these whirls or eddies may be effected in different manners. I admit the paper pulp to the stream of pulp feeding the wire-cloth in an ascending direction. It has been found to be particularly advantageous to employ upright tubes provided with guiding faces, worms, or the like and through which the pulp is introduced onto the machine sieve in an ascending direction.

The invention will be further described with reference to the accompanying drawing, showing by way of example an embodiment of the principles thereof, in a preferred arrangement of parts, Figure 1 presenting such embodiment in a longitudinal section; Figure 2 is a cross section on the line 2—2 of Figure 1 taken through the pulp admitting means of an ordinary long sieve machine.

In the drawing: *a* is the admission tube, channel or the like through which the dilute pulp liquor *b* is introduced into the machine. The admission means *a* is directly connected to a descending box *c* which is connected to a lower horizontal section *d* upon which a plurality of upright tubes *e* are mounted. By this means a system of communicating tubes is obtained, one of the legs of which is formed by the box *c* while the other leg of said tubes is constituted by a plurality of individual tubes *e*. Said tubes *e*, as indicated in Figure 1 of the drawing, are provided with inclined guiding planes, worms or the like and the upper ends of the tubes are in communication with the pulp supplying means *f* from which the dilute pulp *b* is caused to flow onto the endless paper sieve *g*.

The leg of the system of communicating pipes which is constituted by the box *c* is of greater length than the tubes *e* so that the dilute pulp is caused to overcome the resistance of the guiding or worm surfaces with a certain velocity and by forming ascending whirls of liquid the axes of which are substantially at right angle to the horizontal, and the pulp is thereby discharged from the tubes by a whirling movement. By employing a plurality of such tubes a large number of individual whirls are produced, partly intersecting each other and thereby resulting in an exceedingly uniform and thorough whirling around of the fibres of the pulp. If these fibres which perform a whirling movement substantially on a vertical axis, are then deposited upon the sieve, the fibres will arrange themselves in such a manner that they will be substantially uniformly arranged in all directions instead of prefer-

ring to settle in the longitudinal direction of the paper sieve as has been the case in the methods heretofore employed. If several rows of ascending tubes *e* are used they may be preferably arranged in staggered relation to each other as shown in Fig. 2; also the guiding plates on said tubes in the succeeding rows may be of different inclination.

The worm faces in the ascending tubes *e* may all be arranged in the same direction but it is also possible to vary the direction of the worm surfaces.

The velocity of the whirl depends on the hydrostatic over-pressure prevailing in the leg *c* of the system of tubes. The particular advantages of the invention which are produced by the uniform deposition of the fibres in all directions upon the paper sieve consist among other important objects mainly in an increased strength and improved felting qualities of the papers, the decrease of strain on the sieve and associated parts of the machine in consequence of a reduction of the necessary vibration and in an economy of power in the entire operating plant inasmuch as the fibres do not require any more to be so thoroughly ground in the beater as has been the case before my invention.

Example.

As an instance of carrying the invention into practice I may mention a test which has been made on a long sieve paper machine with a certain kind of pulp and without the improvements in accordance with my invention. In this test a certain kind of bag-paper was manufactured which in the longitudinal direction showed a tearing strength of 7000 mtrs. while in the transverse direction the tearing strength amounted to not more than 3500 mtrs. at the maximum so that the ratio of the strength in the transverse direction to the strength in the longitudinal direction amounted to not more than 50:100 at the highest. With this particular kind of paper this relation was heretofore considered to be thoroughly satisfactory.

After the application of the means heretofore described for generating rotary whirling movements of the pulp it has been possible with the same kind of paper and with an unchanged tearing strength of 7000 mtrs. in the longitudinal direction to arrive at a tearing strength of 5400 mtrs. in the transverse direction or in other words the proportion of tearing strength in the transverse direction to the tearing strength in the longitudinal direction was increased 7:100. With an increase of the whirling activity the transverse strength was further increased, while the longitudinal strength remained unchanged, so as to produce a ratio of transverse strength to longitudinal strength of 90:100 a proportion which heretofore it was not possible to even approximate with the usual paper made by machinery; and in further pursuance of the invention it was possible to even arrive at a ratio of 1:1.

In this connection the additional advantage has been realized of reducing the usual grinding action on the pulp for the amount of 10 percent and to cause the paper machine to run at an increase of speed of 10 percent, so that, aside from the considerably improved quality of the paper, the invention has resulted in a decrease of the cost of manufacture and an increase of yield of the same machine after the application of the means for the production of the whirling motion in accordance with my invention.

It should, of course, be understood that the invention has been shown and described by way of exemplification only and that it is not restricted to the particular means, dimensions and arrangements of parts shown and set forth with reference thereto, but modifications and changes may occur within the scope and spirit of the invention, to suit particular conditions of manufacture and the convenience of the user, and without deviating from the ambit of the invention as particularly pointed out in the claims hereunto appended.

What I claim is:—

1. In the method of making machine paper, causing a substantially flat stream of dilute pulp liquor to flow in a substantially longitudinal direction, producing an eddying, whirling movement within said stream substantially at right angle to its direction of flow by admitting the pulp liquor from below the said stream in shape of a plurality of small eddies with substantially vertical axes and submitting the stream to straining while such movement continues.

2. In a paper making machine in combination, a source of pulp supply, a straining wire-cloth, and means intermediate the source and the wire-cloth adapted to admit the pulp liquor to the stream feeding the wire cloth in an ascending direction and in the shape of a plurality of small eddies with substantially vertical axes.

3. In a paper making machine in combination, a substantially U-shaped container, pulp liquor admitting means on one leg of said container, means in the other leg of said container adapted to produce eddying and whirling movement of the liquor, and wire-cloth straining means adjacent the top of the eddy producing leg and operatively associated therewith.

4. In a paper making machine in combination, a substantially U-shaped container, having legs of unequal length, pulp-liquor supplying and feeding means at the longer leg of the container, means adapted to produce eddying and whirling movement of the liquor on the shorter leg of the container, and a traveling wire-cloth adjacent the top

of the shorter leg and cooperatively associated therewith.

5. In a paper making machine in combination, a plurality of substantially upright pipes, means to feed a supply of pulp liquor to said pipes and through the same in the ascending direction, means on said pipes adapted to produce whirling and eddying movement of the liquid, and a substantially horizontal wire-cloth adjacent the upper end of the pipes and operatively associated therewith.

6. In a paper making machine in combination, a plurality of substantially vertical tubes, screw-like inclined guiding surfaces on said tubes, means adapted to feed pulp liquor to and through said tubes in an ascending direction, a substantially horizontal straining wire-cloth substantially in the plane of the top of said tubes, and communicating means between the tubes and the wire-cloth.

7. In a paper making machine in combination, a plurality of substantially vertical tubes, worm-like guiding surfaces on said tubes, means adapted to feed pulp liquor in an ascending direction to and through said tubes, a substantially horizontal straining wire-cloth substantially in the plane of the top of said tubes, and communicating means between the tubes and the wire-cloth.

8. In a paper making machine in combination, a plurality of upright tubes, whirling means on said tubes, a liquid conduit presenting a head of liquid communicating with the bottom ends of said tubes, and a traveling substantially horizontal wire-cloth near the top ends of said tubes.

9. In a paper making machine in combination, a plurality of upright tubes, worm surfaces on said tubes, means communicating with the bottom ends of said tubes and adapted to produce a head of liquid and to feed a supply of pulp liquor to the tubes, and a straining wire cloth communicating with the top ends of said tubes.

10. In a paper making machine in combination, rows of substantially upright tubes in staggered relation to each other, inclined guiding planes on said tubes of different inclination in the succeeding rows, means to feed pulp liquor to and through said tubes in an ascending direction, and a horizontal straining wire-cloth near the top ends of said tubes.

CARL BÜCKING.