Aug. 21, 1956 J. L. MANZOLILLO 2,759,578

MARINE ENGINE CONTROL

Filed Aug. 3, 1955 3 Sheets-Sheet 1

FIG. 1

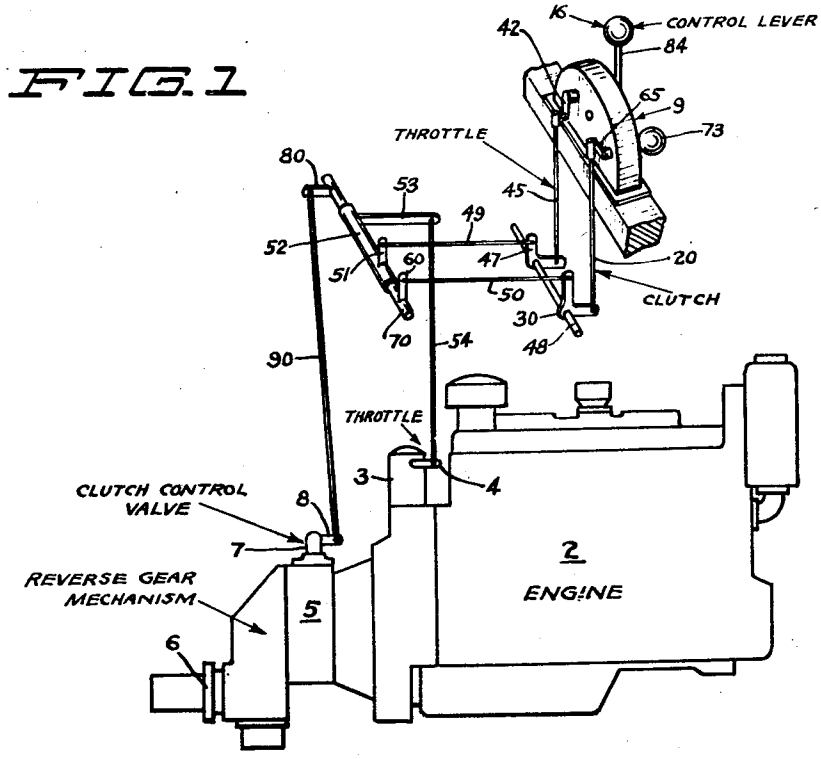

FIG. 3

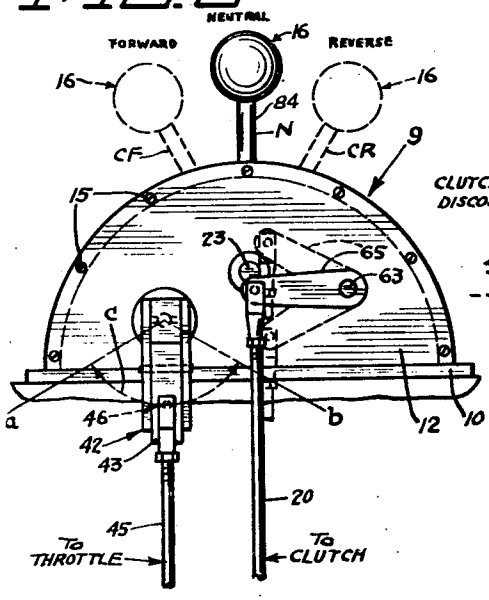

FIG. 2

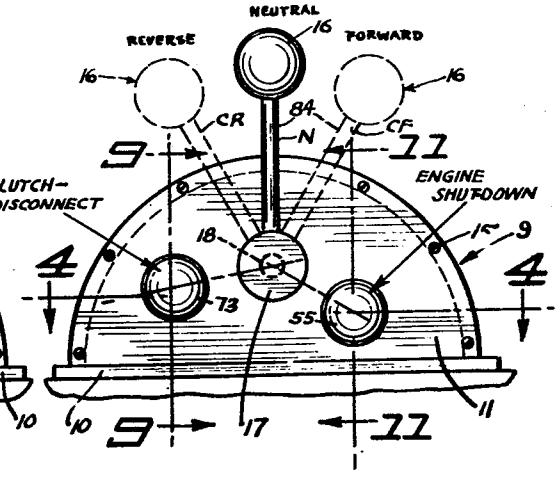

INVENTOR.
JAMES L. MANZOLILLO
BY Paul, Moore & Dugger
ATTORNEYS

Aug. 21, 1956 J. L. MANZOLILLO 2,759,578

MARINE ENGINE CONTROL

Filed Aug. 3, 1955 3 Sheets-Sheet 2

FIG. 5

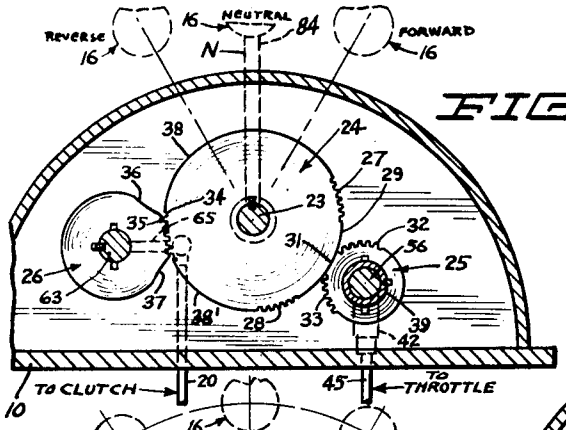

FIG. 6

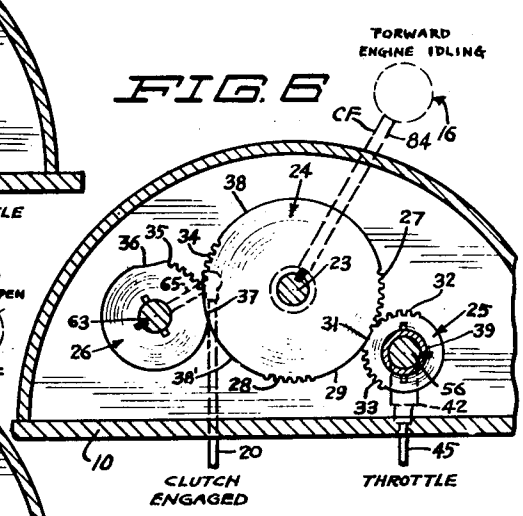

FIG. 7

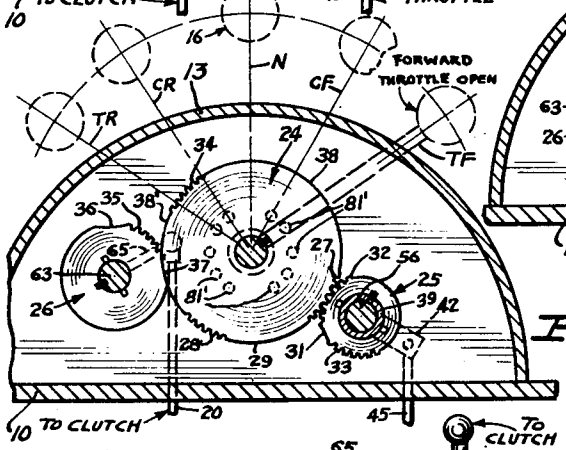

FIG. 4

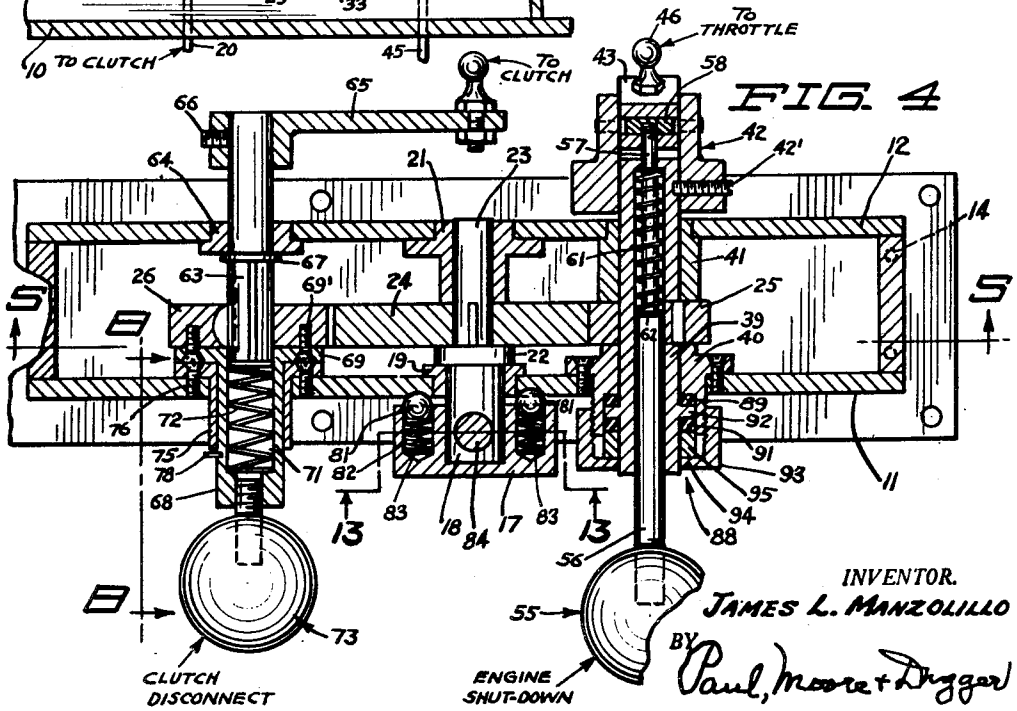

INVENTOR.
JAMES L. MANZOLILLO
BY Paul, Moore & Dygert
ATTORNEYS

Aug. 21, 1956 J. L. MANZOLILLO 2,759,578

MARINE ENGINE CONTROL

Filed Aug. 3, 1955 3 Sheets-Sheet 3

FIG. 8

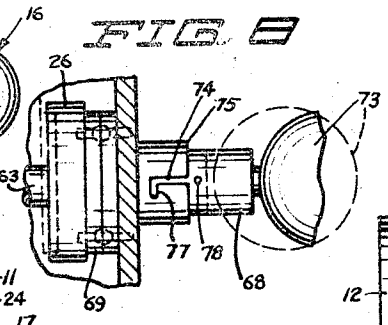

FIG. 9

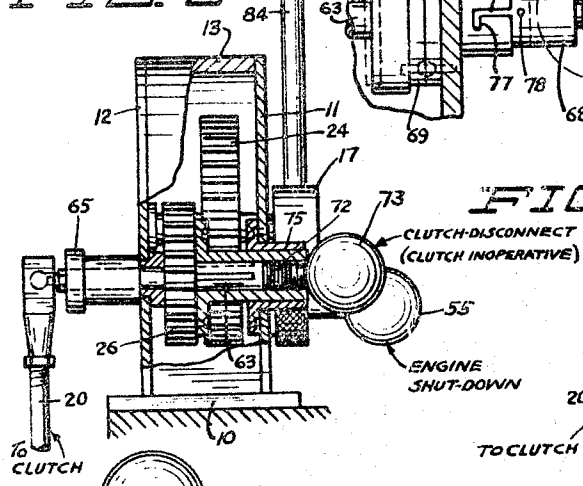

FIG. 10

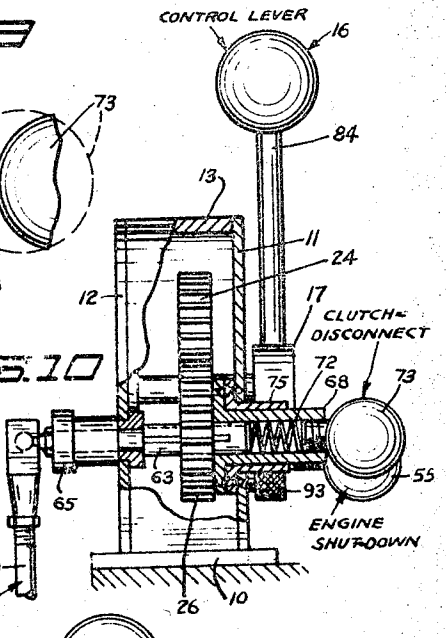

FIG. 11

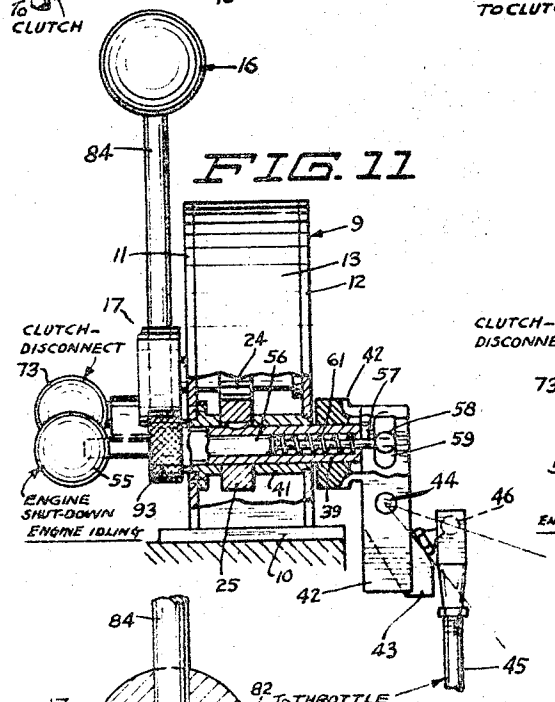

FIG. 12

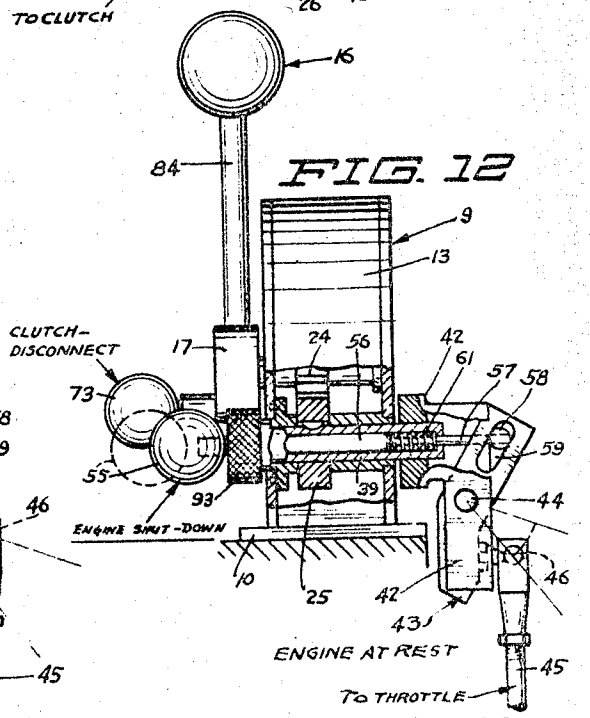

FIG. 13

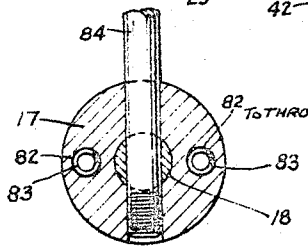

INVENTOR.
JAMES L. MANZOLILLO
BY Paul, Moore & Duggan
ATTORNEYS

United States Patent Office 2,759,578 Patented Aug. 21, 1956

2,759,578

MARINE ENGINE CONTROL

James L. Manzolillo, Peoria, Ill.

Application August 3, 1955, Serial No. 526,223

15 Claims. (Cl. 192—.098)

This invention relates to new and useful improvements in control mechanisms for operating the usual throttle and clutches of a combined marine engine and reverse gear mechanism.

There are now in commercial use various types of controls of this general type, wherein a single lever is used for effecting the operations of the engine throttle and clutches. A single lever control is highly desirable in that it enables the pilot of the vessel to control the operation of the propeller with one hand, thus leaving the other hand available for other use. It is also important in such controls that the operations of the engine throttle and clutches be so timed and synchronized that the engine throttle cannot be actuated to accelerate the engine speed above idling, until the clutch has been made operative to drive the propeller shaft. Such timing and synchronizing of the operations of the throttle and clutches has been accomplished by intermittent gearing.

In controls of this general type now in commercial use, the operative connections between the single control lever and the throttle are so arranged that when the control lever is in neutral position the clutches are in neutral position, and the throttle is in low engine-idling position, whereby the engine will idle at a speed at which it is not likely to stop or stall. In such known controls, the operative connections between the control lever and the throttle and clutches remain operative at all times, whereby when the control lever is shifted from neutral to a selected clutching position, the selected clutch is actuated to effect a driving connection between the engine and propeller shaft, before the throttle can be actuated to accelerate the engine, the engine cannot be operated independently of the clutches without manually disconnecting the clutch linkage from the control lever to permit such independent operation of the engine. Also, no provision is made in the control unit for effecting complete shut-down, or interruption of the engine.

I have found from practical experience, and from personal contact with marine operations over a period of time, that occasions arise from time to time requiring the use of the engine independently of the clutches or marine gear, as for example, when warming up the engine upon initial starting thereof, which may require full use of the throttle, or for driving other engine-driven auxiliaries, such as generators, pumps, winches, etc., which may be performed while the vessel is idle or at rest, as when moored to a dock, or lying at anchor in a harbor.

It is, therefore, highly desirable to provide in a control mechanism of this general type, means whereby the operative connections between the single control lever and the clutches may be temporarily rendered ineffective to actuate the clutches, thereby to permit full use of the engine throttle when necessary, means also being provided in the control unit, whereby the throttle may be momentarily actuated to interrupt operation of the engine or effect a complete shut-down thereof.

An important object of the present invention, therefore, is to provide a control mechanism or unit of the

one-lever type comprising a single operating lever normally having operative connections with the engine throttle and the clutches of the reverse gear mechanism, having means embodied therein for momentarily actuating the throttle linkage independently of the control lever, thereby to effect engine shut-down; and means being interposed in the connections between the control lever and the clutches for temporarily rendering such connections ineffective to actuate the clutches, when the control lever is operated, thereby to permit full use of the throttle independently of the clutches.

A further object of the invention is to provide a control mechanism of this general type which readily lends itself for use in single or multiple engine installations, whereby the operation of the engine and clutches may be controlled from one or more stations, as, for example, in an installation where one control unit is located adjacent to the engine, and another in the pilot house of the vessel, remote from the engine, such dual controls being so interconnected and interlocked that each may be operated independently of the other at all times, and whereby the throttle and clutch movements are so synchronized, under normal operating conditions, the engine cannot be accelerated by movement of the single control lever until after a selected clutch has been moved into clutching engagement with its driven member.

A further object of the invention is to provide a control mechanism of this general type, which is very compact and is adapted for either horizontal or vertical mounting.

A further object of the invention is to provide a control unit of the class described, comprising a single operating lever having operative connections between the engine throttle and the clutches of the marine gear, whereby the throttle and clutches may be actuated by manipulation of the single control lever, the operative connections between the control lever and the throttle and clutches being so interlocked that when the control unit is arranged for controlling the traveling movement of a vessel, the pilot or operator must execute all clutch and throttle operations in the correct sequence, thereby to provide constant protection for the engine and clutches against faulty operation manipulation of the throttle and clutches.

A further and more specific object of the invention is to provide a control unit of this general type comprising a small compact housing having a main drive shaft mounted therein, and an operating lever being secured to said shaft exteriorly of the housing and having means associated therewith for normally retaining it in neutral position, and a pair of rock shafts being mounted in said housing and operatively connected to said drive shaft by intermittent gearing, one of said rock shafts having a crank arm secured thereto exteriorly of the housing and having linkage operatively connecting it to the engine throttle, the other of said rock shafts having linkage connecting it to the forward and reverse clutches of the marine gear, said intermittent gearing synchronizing the operations of the engine throttle and clutches, when the single control lever is manipulated, whereby the throttle cannot be actuated to accelerate the engine until a selected clutch has been rendered operative to effect a driving connection between the engine and propeller shaft.

A further object is to provide a control unit comprising a single control lever having operative connections with the usual engine throttle and marine gear clutches, the connections or linkage between the control lever and throttle being such that when the control lever is in neutral position, the fuel supply to the engine is reduced so that the engine will idle at a low speed, and means being provided for momentarily actuating the throttle linkage

to substantially completely shut off the fuel supply to the engine, thereby to effect engine shut-down.

A further object is to provide a control unit of the class described, wherein the clutch operating linkage is operated by a pinion forming a part of the intermittent gearing located within the housing of the control unit, said pinion being slidable into and out of driving engagement with the main drive gear of the control lever by manipulation of a control element located exteriorly of the housing, whereby the clutch linkage between the control lever and clutches may be temporarily rendered ineffective to shift the clutches, when it is desired to operate the engine independently of the clutches.

A further object is to provide stop means for positively locating the control lever in each of its various positions, whereby the pilot, when shifting the control lever from neutral to one of its clutching positions, and thence to engine-accelerating position, may readily "feel" each position as the control lever is shifted from one position to another, whereby the operation of accurately shifting the control lever from one position to another may readily be accomplished in the dark, because of the positive "feel" imparted to the lever as it reaches each position.

Other objects of the invention reside in the simple and inexpensive construction of the control unit, whereby it may be manufactured at low cost; in the construction and orientation of the various operating parts thereof, whereby they may readily and quickly be assembled within the housing by an unskilled mechanic; in the specific construction of the means for momentarily operating the throttle linkage to effect engine shut-down, which means comprises a pivoted element carried by the crank arm of the throttle actuating rock shaft, and having a spring-biased push rod which normally is in engine-idling position, said push rod having a finger grip or knob located exteriorly of the housing, whereby it may be conveniently thrust forwardly, or in a direction towards the housing, thereby to relatively actuate said pivoted element in the crank arm to actuate the throttle linkage from engine-idling to engine shut-down position, said push rod when released, automatically restoring the throttle to engine-idling position for the next start; in the means provided in connection with the sliding clutch-actuating pinion for retaining said pinion in its inoperative position, out of driving engagement with the main drive gear within the housing; and in the general configuration of the housing, whereby it may readily be mounted in a pilot house, and/or adjacent to the engine or marine gear mechanism, whereby complete control of the vessel may readily and conveniently be effected from one or more stations located remote from one another.

These and other objects of the invention and the means for their attainment will be more apparent from the following description taken in connection with the accompanying drawings.

In the accompanying drawings there has been disclosed a structure designed to carry out the various objects of the invention, but it is to be understood that the invention is not confined to the exact features shown, as various changes may be made within the scope of the claims which follow.

In the drawings:

Figure 1 is a schematic drawing illustrating one method of operatively connecting the control unit to the engine throttle and clutches;

Figure 2 is a front elevation of the control unit or mechanism showing in full and dotted lines the neutral and forward and reverse positions of the single control lever, and also showing the engine shut-down and clutch-disconnect control knobs;

Figure 3 is a view similar to Figure 2, but showing the opposite side of the control unit and the throttle and clutch operating cranks or arms;

Figure 4 is a sectional plan view substantially on the line 4—4 of Figure 2, showing the engine shut-down and the clutch-disconnect control elements in their normal positions;

Figure 5 is a sectional elevation on the line 5—5 of Figure 4, showing the intermittent gearing within the housing for operatively connecting the control lever to the throttle and clutch linkages, said gearing being positioned as when the control lever is in its normal neutral position;

Figure 6 is a view similar to Figure 5, showing the positions of the gears within the housing when the control lever is shifted into position to render the forward clutch operative;

Figure 7 is a view similar to Figure 6, showing the five positions of the control lever, and also showing the positions of the intermittent gearing when the control lever has been shifted into full clutching position and the throttle actuated to accelerate the engine;

Figure 8 is a fragmentary view on the line 8—8 of Figure 4, showing the bayonet slot and cooperating pin for securing the clutch pinion shift lever or rod in position to temporarily retain the slidable pinion out of driving engagement with the main drive gear;

Figure 9 is a detail sectional view substantially on the line 9—9 of Figure 2, showing the clutch pinion of the intermittent gearing in its inoperative position;

Figure 10 is a view similar to Figure 9, showing the clutch pinion in its normal driving engagement with the main drive gear;

Figure 11 is a detail sectional view on the line 11—11 of Figure 2, showing the engine shut-down control element in its normal position, wherein the throttle is positioned to cause the engine to operate at low idling speed;

Figure 12 is a view similar to Figure 11, showing the engine shut-down control element actuated to relatively swing the pivoted element of the throttle crank arm, from engine-idling to engine shut-down positions, thereby to actuate the throttle linkage to momentarily cut off the fuel supply to the engine to effect engine shut-down; and,

Figure 13 is a detail sectional view on the line 13—13 of Figure 4 showing the stop means for retaining the control lever in its various positions.

Engine and reverse gear mechanism assembly

To afford a clearer understanding of the novel invention herein disclosed, there is illustrated in Figure 1, for purposes of disclosure, a conventional internal combustion engine 2 having a carburetor 3 provided with the usual throttle arm 4. A conventional reverse gear mechanism, generally designated by the numeral 5, is shown operatively secured to the engine 2, and has a coupling 6 for operatively connecting it to the usual propeller shaft of the craft, not shown in the drawings.

The reverse gear 5, indicated in Figure 1, comprises forward and reverse clutches, which, as is now common, are preferably hydraulically operated, that is, the clutches are selectively shifted into and out of clutching position by fluid pressure. Such a reverse gear mechanism is disclosed in the pending application of John H. Mooney and George P. Torgersen, Serial No. 454,008, filed September 3, 1954. The directional flow of the fluid within the reverse gear mechanism is controlled by a single control valve 7 shown mounted directly upon the reverse gear housing, and having an operating arm 8, whereby the valve may be actuated to control the selective actuation of the forward and reverse clutches. All of the above described mechanism is now old and well known in the art, and it is therefore believed unnecessary to herein illustrate the same in detail.

Control unit housing

The novel control unit herein disclosed comprises a housing, generally designated by the numeral 9, which preferably is semi-circular in configuration, as best illustrated in Figures 2 and 3. The housing 9, as here shown,

comprises a base plate 10, back wall 11, front wall 12, and a semi-cylindrical top wall 13. The semi-cylindrical top wall 13 is shown secured to the base plate 10 by such means as screws or bolts 14, and the front and rear walls are secured to the top wall 13 by screws or bolts 15, as indicated in Figures 2 and 3. It is to be understood that, if desired, the base plate 10 and back and top walls 11 and 13, respectively, may be cast of a suitable metal such as brass, to provide an integral structure. When so constructed, the front wall 12 is detachably secured to the top wall 13, to provide access to the interior of the housing to facilitate assembly of the various parts, and to permit periodic inspection of the operating mechanism contained within the housing.

Single operating lever and intermittent gearing

The novel control unit herein disclosed is shown comprising a single control lever, generally designated by the numeral 16. Lever 16 has a hub 17 mounted upon and secured to one end of a stub shaft 18, shown mounted in suitable bearings 19 and 21 provided in the front and rear walls 11 and 12, respectively, as best illustrated in Figure 4. Shaft 18 has an enlarged collar 22 shown seated against the inner end of bearing 19 to prevent axial movement of shaft 18 in one direction. The opposite end 23 of shaft 18 is shown of slightly smaller diameter and has a main drive gear 24 non-rotatably secured thereto. Gear 24 is located between the collar 22 of shaft 18 and the inner end of bearing 21, whereby the shaft is restrained from axial movement in its bearings, as will be understood.

The intermittent gearing, best illustrated in Figures 5, 6 and 7, comprises the main operating gear 24, a throttle actuating pinion 25, and a slightly larger clutch actuating pinion 26. The main operating gear 24 is shown comprising circumferentially spaced sets of gear teeth 27 and 28, separated by a smooth convex segment 29, which normally is engaged with a relatively short concave segment 31 of pinion 25, when the control lever 16 is in its neutral position, as indicated in Figure 5. Throttle pinion 25 is similarly provided with circumferentially spaced sets of gear teeth 32 and 33 located at opposite sides of the smooth segment 31 of said pinion in position to be alternately engaged by the sets of gear teeth 27 or 28 of the main gear 24, depending upon which clutch is to be actuated.

The main gear 24 has a third set of gear teeth 34 which normally is engaged with a set of gear teeth 35 provided on clutch pinion 26, as will be understood by reference to Figures 6 and 7. When the control lever is in its neutral position, as indicated by dotted lines in Figure 5, gear teeth 34 of the main gear 24 are in engagement with the gear teeth 35 of pinion 26, as shown in Figure 5. Provided at opposite sides of the gear teeth 35 of pinion 26 are smooth concave peripheral segments 36 and 37. These are adapted to be engaged by the smooth convex peripheral surfaces 38 and 38' of the main gear 24, when one or the other of the two clutches has been shifted into clutching position.

The throttle operating pinion 25 is non-rotatably secured to a hollow shaft 39, shown mounted in bearings 40 and 41 secured respectively to the front and rear walls 11 and 12, best shown in Figure 4. By reference to this figure it will be noted that pinion 25 is positioned between the inwardly facing ends of bearings 40 and 41, whereby the tubular shaft 39 is restrained from relative axial movement, as will be understood. A crank arm 42 is nonrotatably secured to the rear end portion of the tubular shaft 39 by such means as set screws 42', whereby the crank arm 42 is normally positioned at the bottom of its arc of travel, as best illustrated in Figure 3. When the crank arm is so positioned, the control lever 16 is in its neutral position, and the engine throttle is in its normal low engine-idling position.

The crank arm 42 is preferably forked, as illustrated in Figures 3, 11 and 12, and between the forked arms thereof an element 43 is pivotally mounted upon a pivot 44. One end of a connecting rod 45 is pivotally connected to the lower end of the pivoted element 43, by such means as a ball-and-socket joint 46. The opposite end of the connecting rod is shown connected to one arm of a bellcrank 47, which may be rotatably supported upon a supporting rod or shaft 48, mounted in suitable bearings, not shown in the drawings. The other arm of bellcrank 47 is shown having a link 49 connecting it to an arm 51 secured to a tubular shaft or member 52. A second arm 53 is secured to the tubular shaft 52 and has a connection 54 connecting it to the throttle arm 4 of the carburetor 3, as best illustrated in Figure 1. Thus, when the crank arm 42 swings from its normal vertical position to one or the other of the positions indicated by the lines *a* and *b* in Figure 3, the throttle linkage will be actuated to swing the throttle arm 4 upwardly from its idling position shown in Figure 1, thereby to increase the fuel supply to the engine to effect acceleration thereof.

Engine shut-down

One of the outstanding features of the present invention resides in the provision of means within the control unit, whereby a pilot stationed remote from the engine and reverse gear mechanism may, when so desired, effect engine shut-down or interruption of the engine, directly from the pilot house or station. To thus effect engine shut-down, a control element, generally designated by the numeral 55, is provided. This control element comprises a rod 56 which is slidably mounted in the bore provided in the tubular shaft 39. The rod 56 has a reduced end portion 57 which projects from the rear end of the tubular shaft 39 and has a cross-pin 58 secured thereto. Cross-pin 58 is received in a slot 59 provided in the upper end of the pivoted element 43 of the throttle crank arm 42. A spring 61 is coiled about the reduced end portion 57 of the push rod 46 and has one end seated against a shoulder 62 on rod 56. The opposite end of spring 61 is seated against the bottom of the bore provided in the tubular shaft 39, whereby the spring 61 constantly urges the rod 56 into its normal full-line position, shown in full lines in Figures 4 and 11. When thus positioned, the throttle linkage 45 is elevated to the position shown in Figure 11. This is the normal engine-idling position of the throttle linkage.

When it is desired to effect engine shut-down, the pilot or operator simply exerts an inward thrust on the control element 55, and shifts it from the dotted to the full line position shown in Figure 12. Such actuation of control element 55 causes the lower end of pivoted element 43 to swing downwardly from the position shown in Figure 11 to that shown in Figure 12, whereby the throttle linkage 46 is moved downwardly from its normal engine-idling position shown in Figure 11, to a position wherein the throttle is actuated to completely shut off the fuel supply to the engine, whereupon the engine immediately comes to rest. When the engine has been brought to a stop, the operator releases the control element 55, whereupon the pivoted element 43 of crank arm 42 is returned to its normal engine-idling position shown in Figure 11, thereby to condition the engine throttle for engine starting, when next the engine is to be utilized.

Clutch actuator and linkage

The means provided for actuating the clutches comprises a stub shaft 63 to the inner end of which the clutch pinion 26 is splined, whereby pinion 26 may be laterally shifted on the splined end of shaft 63 to the position shown in Figure 9, whereby it is out of driving engagement with the main drive gear 24. The shaft 63 is rotatably supported in a bearing 64 secured in the rear wall 12 of the housing, and extends outwardly therefrom to support a crank arm 65, fixedly secured thereto by suitable means such as set screws 66. Shaft 63 is shown

having an annular collar 67 which engages the inner face of bearing 64, thereby to limit axial movement of the shaft in one direction.

In Figure 1 the crank arm 65 is shown connected by a rod 20 to one arm of a bellcrank 30, rotatably supported upon shaft or rod 48 in a manner similar to the bellcrank 47. The other arm of bellcrank 30 has a connection 50 connecting it to an arm 60 fixed to a shaft 70 which may be rotatably mounted within the tubular member 52, as shown in Figure 1. Shaft 70 has an arm 80 at its opposite end shown operatively connected to the arm 8 of the clutch control valve 7 by a suitable connection 90.

Clutch-disconnect mechanism

Another important feature of the invention resides in the means provided in the control unit for temporarily rendering the clutch-actuating crank arm 65 ineffective to actuate the clutches, when the single operating or control arm 16 is actuated, thereby to permit full use of the throttle from idling to maximum engine speed, when such occasion arises.

The means provided for thus temporarily rendering the clutch linkage ineffective to actuate the clutches, or to effect "clutch-disconnect" is shown comprising a sleeve-like member 68 provided at its inner end with an annular flange 69 which is secured to pinion 26 by suitable screws 69'. The sleeve-like member 68 has an axial bore 71 adapted to receive the adjacent end of shaft 63. A spring 72 is contained in the bore 71 and has one end engaging the end of shaft 63 and its opposite end the bottom of bore 71. Thus, the spring 72 constantly urges the control element or knob 73 into its neutral position as shown in full lines in Figures 4, 10 and 11, wherein the pinion 26 is in mesh with the main drive gear 24.

Means is provided for preventing relative rotation of the clutch pinion 26, when disengaged from the main drive gear 24, thereby to prevent the clutch-actuating arm 65 from shifting from its neutral horizontal position, shown in Figures 3 and 4. Such means is shown comprising a bayonet slot 74 provided in the wall of a cylindrical bearing 75 in which the sleeve-like member 68 is axially slidable. The bearing sleeve 75 is shown secured to the front wall 11 by such means as screws 76.

The slot 74 has its inner end laterally offset, as indicated at 77 in Figure 8, to receive a pin 78 secured to the sleeve-like member 68, as best illustrated in Figures 4 and 8. When the clutch pinion 26 is in its normal position in driving engagement with the main drive gear 24, pin 78 is clear of the slot 74 to permit member 68 to freely rotate with pinion 26. When it is desired to effect clutch-disconnect, the finger knob 73 is thrust inwardly against the tension of spring 72, whereby the pin 78 will enter slot 74, and at the same time clutch pinion 26 is moved out of driving engagement with the main drive gear 24. When the pinion 26 is out of mesh with the drive gear 24, as shown in Figure 9, the clutch arm 65 is locked in its normal de-clutching position, shown in full lines in Figure 3, as a result of the bayonet slot 74 and co-acting pin 78.

Control lever stop mechanism

Means is provided for retaining the control lever in its various positions, and is shown comprising a plurality of spring pressed detents or balls 81 mounted in sockets 82 provided in the inner face of the hub 17 of the control lever 16, as best illustrated in Figure 4. Springs 83 are contained in the sockets 82 and constantly urge the spherical detents 81 against the front wall 11 of the housing, as will be understood by reference to Figure 4. A series of indentations or recesses 81' are provided in the adjacent surface of the front wall 11 for receiving the detents 81, as indicated in Figure 7, thereby to lock the control lever 16 in a selected position.

The indentations 81' and the detents 81 in the hub 17 of the control lever bear a direct relation to the various positions of the control lever 16, and are so located that each time the control lever 16 reaches one of its various positions, the detents 81 will drop into the indentations or recesses of the selected position with a snap action, and thereby secure the lever in such selected position. The indentations 81' are of such depth relative to the diameter of the spherical detents 81, that the detents may readily pass over said indentations, when shifting the control lever 16 from one position to another.

The spring biased detents 81 and the indentations 81' thus cooperate to retain the lever in its various positions and, at the same time, provide means whereby the operator, when shifting from one position to another, can "feel" each position as the lever is swung over its range of travel, as will be understood by reference to Figure 7. The hub 17 is secured to the shaft 18 by means of the rod 84 of the control lever 16, as illustrated in Figure 13. As here shown, the lower end of rod 84 is received in an aperture 85 provided in the hub 17, and thence passes through an aperture 86 in shaft 18. The lower end of rod 84 is received in threaded engagement with the collar 17, as indicated at 87, whereby the rod 84 of control lever 16 serves to secure the hub to shaft 18 for direct rotation therewith.

Throttle brake

In the operation of various types of craft, it is sometimes desirable to operate the engine at a given speed, and means is therefore provided in the present control unit for thus locking the throttle linkage against movement to assure a preset throttle setting, should such operation be deemed necessary or desirable.

The means provided for thus locking the throttle linkage against movement is shown comprising a friction brake, generally designated by the numeral 88, best illustrated in Figure 4. The brake comprises friction elements 89 and 91 spaced apart by an annular flange 92 on the tubular shaft 39. The friction elements 89 and 91 and annular flange 92 are seated in a counterbore provided in the outer end of bearing 40. The outwardly projecting end of bearing 40 is exteriorly threaded to receive a brake nut 93 having an inturned terminal flange 94 engaging one end of a collar 95, the opposite end of which is seated against friction element 91. The outer end of brake nut 93 is bored to receive the end of the tubular shaft 39.

Normally the tubular shaft 39 is freely rotatable in bearing 40 by throttle pinion 25, said pinion being non-rotatably secured thereto, as hereinbefore stated. When it is desired to lock the throttle linkage against movement, the operator relatively rotates the nut 93 of brake 88 to compress the friction elements 89 and 91 within the counterbore in bearing 40, whereby such elements will frictionally grip the annular flange 92 of shaft 39 and thus restrain or prevent its relative rotation in bearing 40. The brake nut 93 has its peripheral surface suitably knurled, as shown in Figure 11, to facilitate grasping it with the fingers.

Operation

The operation of the control unit herein disclosed is as follows:

When the single control lever 16 is in its neutral position N, shown in full lines in Figures 1, 2 and 3, the throttle crank arm 42 is vertically disposed, as best shown in Figure 3, whereby the pivotal connection between the crank arm 42 and throttle linkage or connection 45 is disposed at the lowest point of its arc of travel, indicated by the line *c* in Figure 3. When thus positioned, the throttle arm 4 of the engine carburetor 3 is in engine-idling position, whereby the engine will idle at a speed at which it is not likely to stall during free idling thereof.

When the control lever 16 is in its neutral position N, as above described, gear teeth 34 of the main drive gear 24 are in full mesh with the gear teeth 35 of clutch pinion 26, whereby the initial movement of the control lever in either direction from neutral, will effect actuation of the

clutch linkage. It will also be noted by reference to Figure 5 that when the intermittent gearing is in its normal position, the smooth segment **31** of throttle pinion **25** is engaged with the smooth section **29** of the main drive gear **24**, whereby the throttle pinion **25** is locked against relative rotation, thereby to provide a delayed throttle action, whereby the throttle cannot be actuated to accelerate the engine until after a selected clutch has been made operative provided, of course, that the clutch-disconnect knob is in its normal position, as shown in Figure 4.

Assuming now that the vessel is to be maneuvered in a forward direction, the control lever **16** is then manually shifted from its neutral position N to position CF, indicated in dotted lines in Figure 6. Such initial movement of the control lever **16** causes the clutch pinion **26** to partially rotate from the position shown in Figure 5 to that shown in Figure 6, as a result of its driving connection with gear **24** through the two sets of gear teeth **34** and **35**. Such partial rotation of clutch pinion **26** swings the clutch crank arm **65** upwardly from its normal horizontal full line position to the dotted line position shown in Figure 3, whereby the clutch linkage between the control unit and the operating arm **8** of the clutch control valve **7** is actuated to shift the forward clutch, not shown, into clutching position, thereby to effect a driving connection between the engine and propeller shaft. The above described portion of each cycle of operation takes place before the throttle can be actuated to accelerate the engine, thus preventing acceleration of the engine until the selected clutch has been operatively engaged.

To continue the cycle of operation, the control lever **16** is next shifted from position CF to position TF (see Figure 7) whereupon the gear teeth **27** of the main drive gear **24** engage gear teeth **32** of the throttle pinion **25**, and thus partially rotates said pinion to shift the throttle crank arm **42** from its normal lower position, to the position indicated by the broken line *b* in Figure 3. When the throttle crank arm **42** is so positioned, the engine is operating at maximum speed. The speed of the engine, however, may be accurately controlled between idling and maximum by manipulation of the control lever **16** between positions CF and TF.

When it is desired to bring the vessel to a stop, the operator or pilot returns the control lever **16** to its neutral position N which completes one cycle of operation of the control lever. The spring biased detents **82** tend to arrest the swinging movement of the control lever **16** as it passes over each of its several positions, indicated in Figure 7, whereby the operator may readily "feel" each position of the control lever, which greatly facilitates the operation of accurately shifting the lever to its various operating positions during operation of the craft. When the lever **16** is returned to neutral, the throttle and clutch pinions **25** and **26** are returned to their neutral positions, indicated in Figure 5, whereby the throttle and clutch crank arms **42** and **65**, respectively, are again locked against relative rotation by the intermittent gearing **24**, **25** and **26**.

If the movement of the vessel or craft is to be reversed, the control lever **16** is moved from its neutral position N to position CR indicated in Figure 7. During this portion of the lever travel, the reverse clutch is made operative to transmit power from the engine to the propeller shaft. Continued movement of the lever from position CR to position TR actuates the throttle to accelerate the engine.

Should an emergency arise, requiring the pilot to quickly interrupt the traveling movement of the boat, or to completely reverse its movement, the control lever may be quickly shifted from forward position TF to reverse position TR, whereby the forward clutch is rendered inoperative and the reverse clutch is made operative to reverse rotation of the propeller and thus bring the boat to an abrupt stop. Such emergency operation of the control lever **16** may be accomplished at any time, when necessary, without danger of damaging the gearing or clutches, nor stalling the engine, because the speed of the engine must be reduced to idling in the course of shifting the control lever **16** from position TF to position TR, or vice versa.

From the above it will also be noted that the operator or pilot cannot inadvertently or accidently accelerate the engine until after a selected clutch has been rendered operative.

Should it be deemed desirable to operate the engine independently of the clutches, clutch-disconnect knob **73** is shoved inwardly from its normal extended position, shown in Figure 10, to the position shown in Figure 9, whereby the sleeve member **68** is axially translated to shift the clutch pinion **26** out of driving engagement with the main drive gear **24**. The clutch pinion **26** is locked against relative rotation, when shifted out of driving engagement with gear **24**, by the co-action of the bayonet slot **74** and pin **78**. When the operator subsequently returns the clutch-disconnect control to its normal operative position, the teeth **35** of pinion **26** will readily slide into engagement with the teeth **34** of the drive pinion, thereby to restore the driving connection between pinion **26** and gear **24**.

When the clutch pinion **26** is out of driving engagement with the main drive gear **24**, as shown in Figure 9, control lever **16** may be freely actuated to rotate throttle pinion **25** to increase the speed of the engine from idling to maximum. Such actuation of the throttle is accomplished by movement of the main control lever **16** between positions CF and TF, or between positions CR and TR indicated in Figure 7.

Should it be deemed advisable to completely interrupt operation of the engine for some reason, as, for example, when the boat is to be docked for a period of time, the operator depresses the engine shut-down knob **55** momentarily, whereby the pivoted element **43** in throttle crank arm **42** is pivotally shifted from its normal position, shown in Figure 11 to the position shown in Figure 12, whereupon the throttle linkage **45** is moved downwardly, as indicated by the angle of swinging movement of element **43**, indicated by the broken lines in Figures 11 and 12. Such actuation of the throttle linkage moves the arm **4** of the engine carburetor **3** to a position to completely shut off the fuel supply to the engine, whereby the engine will immediately come to rest. The operator then releases the control knob **55**, whereupon the throttle linkage is restored to its normal engine-idling position.

The throttle and clutch linkage illustrated in Figure 1 is merely illustrative of this part of the mechanism, as obviously such linkage will vary in accordance with the various installations in which the control unit is utilized.

The novel control unit herein disclosed is small and compact, is self-contained, and is adapted for either horizontal or vertical mounting, and may be used for either single or multiple engine installations. It may be mounted adjacent to the engine and reverse gear mechanism, or at a station located remote therefrom, as, for instance, in the usual pilot house of the vessel. When mounted at a remote station, the throttle crank arm **42** is connected to the throttle arm **4** of the engine carburetor or governor **3**, by suitable linkage, as illustrated in Figure 1, and the clutch crank arm **65** is similarly connected to the lever **8** of the clutch control valve **7** of the clutch mechanism.

Crank arms **42** and **65** are so interlocked with the main control lever **16**, that when the operator or pilot manipulates the control lever **16** in the operation of the boat or vessel, all clutch and throttle operations will be executed in the correct sequences. In other words, the interlocking of the main control lever **16** with the clutch and throttle crank arms **42** and **65** through the intermit-

tent gears 24, 25 and 26, is such, under normal operating conditions, that the selected clutch is always made operative to effect a driving connection between the engine and propeller shaft before the throttle can be actuated to accelerate the engine from low idling. This is of extreme importance in that it provides a constant protection for the engine and clutches at all times.

The embodiment in the control unit of the clutch-disconnect feature is also important, as it makes it possible for the operator or pilot, when the occasion arises, to allow full use of the throttle for independent operation of the engine, in the event it should become necessary to "warm up" the engine, upon initial starting thereof, or for operating auxiliary equipment such as generators, pumps, winches. etc.

The engine shut-down feature makes it possible for the pilot to completely stop or interrupt the engine from the remote control station, when so desired, by the simple actuation of the engine shut-down knob 55. When the operator releases knob 55, following interruption of the engine, the engine throttle is automatically restored to its normal engine-idling position, whereby the engine is ready for the next start.

The control unit herein disclosed has been found extremely practical and efficient in the operation of various types of vessels, as, for example, boats used by the Coast Guard, tug boats, and others, which must be highly maneuverable, and under complete control of the pilot or operator at all times.

From the foregoing, it will thus be seen that the novel control unit herein disclosed combines in a single compact unit, all of the important features desired in such a control, whereby an operator or pilot stationed remote from the boat's engine and reverse gear mechanism, has full and complete control of the operation and maneuverability of his ship or craft at all times.

The foregoing detailed description has been given for clearness of understanding only, and no unnecessary limitations should be understood therefrom, but the appended claims should be construed as broadly as permissible in view of the prior art.

I claim as my invention:

1. A control mechanism for operating the throttle and clutch of a marine engine having a propeller shaft, said control mechanism comprising a control lever, linkage permanently connecting the control lever to the engine throttle whereby the throttle is normally in engine idling position, when the control lever is in neutral, other linkage connecting the control lever to the clutch, whereby initial movement of the control lever from neutral will render the clutch operable to drive the propeller shaft before the throttle linkage can be actuated to accelerate the speed of the engine, and means embodied in the throttle linkage for actuating said linkage independently of the control lever to cut off the supply of fuel to the engine to effect engine shut-down.

2. A control mechanism according to claim 1, wherein the means for actuating the throttle linkage independently of the control lever to effect engine shut-down, comprises a movable element having an independent operating member.

3. A control mechanism according to claim 2, wherein the throttle linkage includes a crank arm, and the movable element for actuating the throttle linkage independently of the control lever to effect engine shut-down is pivotally mounted on said crank arm.

4. A control mechanism according to claim 3 wherein a manually operable push rod is connected to the pivoted element mounted on the throttle crank arm thereby to facilitate actuating said element to effect engine shut-down.

5. A control mechanism according to claim 1, wherein means is provided in the connection between the control lever and clutch linkage for temporarily rendering said linkage ineffective to actuate the clutch, whereby the control lever may be utilized for actuating the throttle over its full range, independently of the clutch.

6. A control mechanism according to claim 5, wherein means is provided for accurately synchronizing the operations of the throttle and clutch linkages, whereby the engine cannot be accelerated until a selected clutch has been rendered operative, and independent control elements for manually effecting engine shut-down, and for rendering the clutch linkage ineffective to operate the clutches.

7. A control unit for operating the throttle of a marine engine and the clutches of a reverse gear mechanism coupled to said engine, said control unit comprising a single control lever, intermittent gearing permanently connected to the control lever, separate linkages connecting said gearing to the engine throttle and to said clutches whereby the operations of the throttle and clutches are accurately synchronized, under normal operating conditions, and whereby the engine is not likely to stall when shifting from forward to reverse or from reverse to forward, and an auxiliary control device embodied in the throttle linkage and manually operable independently of said single control lever to cut off the supply of fuel to the engine to effect engine shut-down.

8. A control unit according to claim 7, wherein means is provided for actuating the throttle independent of the control lever, to momentarily shut off the fuel supply to the engine, thereby to effect engine shut-down, and wherein means is provided for rendering the intermittent gearing ineffective to actuate the clutches, when the single control lever is actuated.

9. A control unit according to claim 1, wherein means is provided for securing the throttle in adjusted position.

10. In a control unit of the class described, a housing, a drive shaft mounted therein and having an operating lever secured thereto, a main drive gear fixed to said shaft within the housing for direct rotation therewith, a throttle operating shaft having a pinion fixed thereto, a clutch operating shaft having a pinion non-rotatably mounted thereon, said pinions having intermittent driving connections with the main drive gear, thereby to accurately synchronize the operations of the throttle and clutches, said clutch operating pinion being slidable on its operating shaft, whereby it may be shifted out of driving engagement with said main drive gear to temporarily render the driving connection between the main drive gear and the clutch pinion ineffective to actuate the clutch, thereby to effect clutch-disconnect.

11. A control unit according to claim 10, wherein the clutch pinion is secured to a member mounted for sliding movement in a wall of the housing and having an operating handle exteriorly of the housing to facilitate manually shifting the clutch pinions out of driving engagement with the main drive gear.

12. A control unit according to claim 11 wherein means is provided for locking the clutch pinion in clutch-disconnect position, thereby to permit free operation of the throttle independently of the clutch.

13. In a control unit of the class described, a housing, a drive shaft mounted therein and having an operating lever, a main drive gear fixed to said shaft within the housing, a tubular shaft mounted in the housing and having a crank arm secured to one end thereof and disposed exteriorly of the housing, an element pivoted to said crank arm for swinging movement therewith as a unit, said element being mounted for relative pivotal movement on said crank arm in a direction longitudinally of said tubular shaft, linkage connecting said element to the engine throttle, said element normally being in engine idling position when the operating lever is in neutral position, and means within said tubular shaft manually operable independently of the operating lever and said crank arm, thereby to momentarily actuate the engine throttle to effect engine shut-down.

14. A control unit according to claim 13, wherein said

manually operable means comprises a spring-biased push rod having one end projecting from the housing.

15. A control unit according to claim 13 wherein friction means is provided for securing the tubular throttle actuating shaft against relative rotation in the housing, thereby to temporarily secure the throttle in adjusted position.

References Cited in the file of this patent

UNITED STATES PATENTS

2,588,650 Morse ---------- Mar. 11, 1952