(12) INTERNATIONAL APPLICATION PUBLISHED UNDER THE PATENT COOPERATION TREATY (PCT)

(19) World Intellectual Property Organization
International Bureau

(43) International Publication Date
13 June 2013 (13.06.2013)

WIPO | PCT

(10) International Publication Number
WO 2013/086503 A3

(51) International Patent Classification:
F25C 5/00 (2006.01) *F25D 23/12* (2006.01)

(21) International Application Number:
PCT/US2012/068767

(22) International Filing Date:
10 December 2012 (10.12.2012)

(25) Filing Language: English

(26) Publication Language: English

(30) Priority Data:
61/568,953 9 December 2011 (09.12.2011) US
61/580,785 28 December 2011 (28.12.2011) US
13/709,771 10 December 2012 (10.12.2012) US

(71) Applicant: **ELECTROLUX HOME PRODUCTS, INC.** [US/US]; 10200 David Taylor Drive, Charlotte, NC 28262 (US).

(72) Inventors: **SANCHEZ, Jorge, Carlos Montalvo**; 101 Masters Blvd., Anderson, SC 29624 (US). **MCCOLLOUGH, Thomas, W.**; 101 Masters Blvd., Anderson, SC 29624 (US). **BERTOLINI, Nilton, Carlos**; 101 Masters Blvd., Anderson, SC 29624 (US). **MCMAHAN, Travis**; 101 Masters Blvd., Anderson, SC 29624 (US). **COMSA, Cornel**; 101 Masters Blvd., Anderson, SC 29624 (US).

(74) Agents: **GARVEY. Michael, W.** et al.; Pearne & Gordon, LLP, 1801 East Ninth Street, Suite 1200, Cleveland, OH 44114-3108 (US).

(81) Designated States *(unless otherwise indicated, for every kind of national protection available)*: AE, AG, AL, AM, AO, AT, AU, AZ, BA, BB, BG, BH, BN, BR, BW, BY, BZ, CA, CH, CL, CN, CO, CR, CU, CZ, DE, DK, DM, DO, DZ, EC, EE, EG, ES, FI, GB, GD, GE, GH, GM, GT, HN, HR, HU, ID, IL, IN, IS, JP, KE, KG, KM, KN, KP, KR, KZ, LA, LC, LK, LR, LS, LT, LU, LY, MA, MD, ME, MG, MK, MN, MW, MX, MY, MZ, NA, NG, NI, NO, NZ, OM, PA, PE, PG, PH, PL, PT, QA, RO, RS, RU, RW, SC, SD, SE, SG, SK, SL, SM, ST, SV, SY, TH, TJ, TM, TN, TR, TT, TZ, UA, UG, US, UZ, VC, VN, ZA, ZM, ZW.

(84) Designated States *(unless otherwise indicated, for every kind of regional protection available)*: ARIPO (BW, GH,

[Continued on next page]

(54) Title: SINGLE PADDLE ICE AND WATER DISPENSER

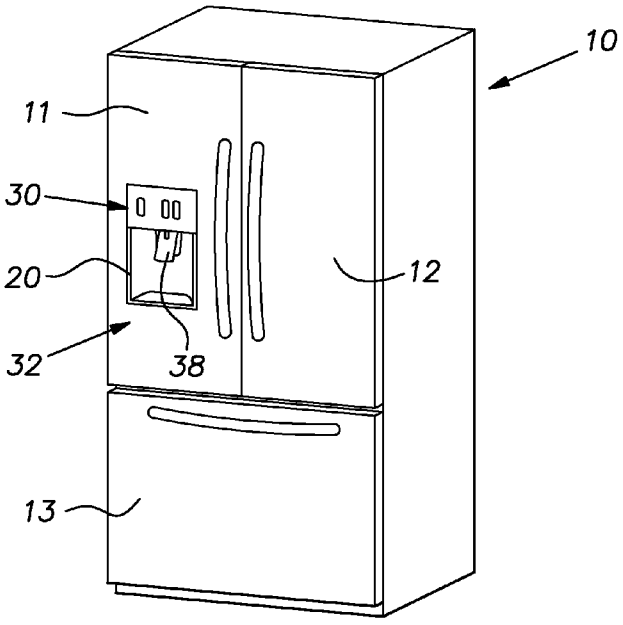

FIG. 1

(57) Abstract: A dispensing unit is operatively associated with a refrigeration appliance for selectively dispensing water and ice at a dispensing station. The dispensing unit includes an actuator that is movable to selected positions in order to support the dispensing of the water and ice. The dispensing unit can include a passageway through which ice is dispensed, and an ice door can be provided for selectively opening and closing the passageway to the dispensing of ice. In one aspect, the ice door can be opened and closed mechanically and in another aspect, the ice door can be opened and closed electromechanically. The dispensing unit also can provide for the position of a water-dispensing nozzle to be adjusted for the purpose of dispensing water to receptacles outside a recessed area at which the nozzle is located and to provide for the activation of illuminating devices to indicate operating conditions at the refrigeration appliance.

WO 2013/086503 A3

GM, KE, LR, LS, MW, MZ, NA, RW, SD, SL, SZ, TZ, UG, ZM, ZW), Eurasian (AM, AZ, BY, KG, KZ, RU, TJ, TM), European (AL, AT, BE, BG, CH, CY, CZ, DE, DK, EE, ES, FI, FR, GB, GR, HR, HU, IE, IS, IT, LT, LU, LV, MC, MK, MT, NL, NO, PL, PT, RO, RS, SE, SI, SK, SM, TR), OAPI (BF, BJ, CF, CG, CI, CM, GA, GN, GQ, GW, ML, MR, NE, SN, TD, TG).

Published:

— *with international search report (Art. 21(3))*

— *before the expiration of the time limit for amending the claims and to be republished in the event of receipt of amendments (Rule 48.2(h))*

(88) Date of publication of the international search report:
19 June 2014

INTERNATIONAL SEARCH REPORT

International application No
PCT/US2012/068767

A. CLASSIFICATION OF SUBJECT MATTER
INV. F25C5/00 F25D23/12
ADD.

According to International Patent Classification (IPC) or to both national classification and IPC

B. FIELDS SEARCHED

Minimum documentation searched (classification system followed by classification symbols)
F25C F25D

Documentation searched other than minimum documentation to the extent that such documents are included in the fields searched

Electronic data base consulted during the international search (name of data base and, where practicable, search terms used)
EPO-Internal, WPI Data

C. DOCUMENTS CONSIDERED TO BE RELEVANT

Category*	Citation of document, with indication, where appropriate, of the relevant passages	Relevant to claim No.
A	US 2010/224279 A1 (CHOU CHIN-WEN [TW]) 9 September 2010 (2010-09-09) paragraph [0030] - paragraph [0031]; figures 3-5c	1
A	EP 2 333 467 A2 (WHIRLPOOL CO [US]) 15 June 2011 (2011-06-15) abstract; figures 1-6	1

☐ Further documents are listed in the continuation of Box C.

☒ See patent family annex.

* Special categories of cited documents :

"A" document defining the general state of the art which is not considered to be of particular relevance

"E" earlier application or patent but published on or after the international filing date

"L" document which may throw doubts on priority claim(s) or which is cited to establish the publication date of another citation or other special reason (as specified)

"O" document referring to an oral disclosure, use, exhibition or other means

"P" document published prior to the international filing date but later than the priority date claimed

"T" later document published after the international filing date or priority date and not in conflict with the application but cited to understand the principle or theory underlying the invention

"X" document of particular relevance; the claimed invention cannot be considered novel or cannot be considered to involve an inventive step when the document is taken alone

"Y" document of particular relevance; the claimed invention cannot be considered to involve an inventive step when the document is combined with one or more other such documents, such combination being obvious to a person skilled in the art

"&" document member of the same patent family

Date of the actual completion of the international search	Date of mailing of the international search report
6 February 2014	02/05/2014

Name and mailing address of the ISA/	Authorized officer
European Patent Office, P.B. 5818 Patentlaan 2 NL - 2280 HV Rijswijk Tel. (+31-70) 340-2040, Fax: (+31-70) 340-3016	Jessen, Flemming

1

INTERNATIONAL SEARCH REPORT

Information on patent family members

International application No
PCT/US2012/068767

Patent document cited in search report	Publication date	Patent family member(s)	Publication date
US 2010224279 A1	09-09-2010	NONE	
EP 2333467 A2	15-06-2011	BR PI1005535 A2	26-03-2013
		EP 2333467 A2	15-06-2011
		US 2011132021 A1	09-06-2011

INTERNATIONAL SEARCH REPORT

International application No.
PCT/US2012/068767

Box No. II Observations where certain claims were found unsearchable (Continuation of item 2 of first sheet)

This international search report has not been established in respect of certain claims under Article 17(2)(a) for the following reasons:

1. ☐ Claims Nos.:
because they relate to subject matter not required to be searched by this Authority, namely:

2. ☐ Claims Nos.:
because they relate to parts of the international application that do not comply with the prescribed requirements to such an extent that no meaningful international search can be carried out, specifically:

3. ☐ Claims Nos.:
because they are dependent claims and are not drafted in accordance with the second and third sentences of Rule 6.4(a).

Box No. III Observations where unity of invention is lacking (Continuation of item 3 of first sheet)

This International Searching Authority found multiple inventions in this international application, as follows:

see additional sheet

1. ☐ As all required additional search fees were timely paid by the applicant, this international search report covers all searchable claims.

2. ☐ As all searchable claims could be searched without effort justifying an additional fees, this Authority did not invite payment of additional fees.

3. ☐ As only some of the required additional search fees were timely paid by the applicant, this international search report covers only those claims for which fees were paid, specifically claims Nos.:

4. ☒ No required additional search fees were timely paid by the applicant. Consequently, this international search report is restricted to the invention first mentioned in the claims; it is covered by claims Nos.:

1-13

Remark on Protest

☐ The additional search fees were accompanied by the applicant's protest and, where applicable, the payment of a protest fee.

☐ The additional search fees were accompanied by the applicant's protest but the applicable protest fee was not paid within the time limit specified in the invitation.

☐ No protest accompanied the payment of additional search fees.

FURTHER INFORMATION CONTINUED FROM PCT/ISA/ 210

This International Searching Authority found multiple (groups of) inventions in this international application, as follows:

1. claims: 1-13

   A dispensing unit including an actuator with three positions being configured to contact the ice door in the third position.

   ---

2. claims: 14-28

   A dispensing unit including an actuator with two positions and an electric motor associated with the ice door.

   ---

3. claims: 29-33

   A dispensing unit with a movable nozzle.
