(12) INTERNATIONAL APPLICATION PUBLISHED UNDER THE PATENT COOPERATION TREATY (PCT)

(19) World Intellectual Property Organization
International Bureau

(43) International Publication Date
15 February 2018 (15.02.2018)

WIPO | PCT

(10) International Publication Number
WO 2018/031484 A1

(51) International Patent Classification:
E21B 17/10 (2006.01) *E21B 19/24* (2006.01)
E21B 17/22 (2006.01)

(21) International Application Number:
PCT/US2017/045779

(22) International Filing Date:
07 August 2017 (07.08.2017)

(25) Filing Language: English

(26) Publication Language: English

(30) Priority Data:
62/372,199 08 August 2016 (08.08.2016) US

(71) Applicant: **OIL STATES INDUSTRIES, INC.** [US/US]; 7701 South Cooper Street, Arlington, Texas 76001 (US).

(72) Inventors: **BUDLER, Nicholas Frederick**; 1700 College Park Rd., Claremont, Oklahoma 74017 (US). **SANDSNESS, Jimmy Dale**; 3723 Belcher Road, Mounds, Oklahoma 74047 (US).

(74) Agent: **RUTHERFORD, Keith A.**; Blank Rome LLP, 717 Houston Avenue, Suite 1400, Houston, Texas 77002 (US).

(81) Designated States *(unless otherwise indicated, for every kind of national protection available)*: AE, AG, AL, AM, AO, AT, AU, AZ, BA, BB, BG, BH, BN, BR, BW, BY, BZ, CA, CH, CL, CN, CO, CR, CU, CZ, DE, DJ, DK, DM, DO, DZ, EC, EE, EG, ES, FI, GB, GD, GE, GH, GM, GT, HN, HR, HU, ID, IL, IN, IR, IS, JO, JP, KE, KG, KH, KN, KP, KR, KW, KZ, LA, LC, LK, LR, LS, LU, LY, MA, MD, ME, MG, MK, MN, MW, MX, MY, MZ, NA, NG, NI, NO, NZ, OM, PA, PE, PG, PH, PL, PT, QA, RO, RS, RU, RW, SA, SC, SD, SE, SG, SK, SL, SM, ST, SV, SY, TH, TJ, TM, TN, TR, TT, TZ, UA, UG, US, UZ, VC, VN, ZA, ZM, ZW.

(84) Designated States *(unless otherwise indicated, for every kind of regional protection available)*: ARIPO (BW, GH, GM, KE, LR, LS, MW, MZ, NA, RW, SD, SL, ST, SZ, TZ, UG, ZM, ZW), Eurasian (AM, AZ, BY, KG, KZ, RU, TJ, TM), European (AL, AT, BE, BG, CH, CY, CZ, DE, DK, EE, ES, FI, FR, GB, GR, HR, HU, IE, IS, IT, LT, LU, LV, MC, MK, MT, NL, NO, PL, PT, RO, RS, SE, SI, SK, SM,

WO 2018/031484 A1

(54) Title: POLYMER-BASED CENTRALIZER FOR DOWNHOLE DRILLING APPARATUS

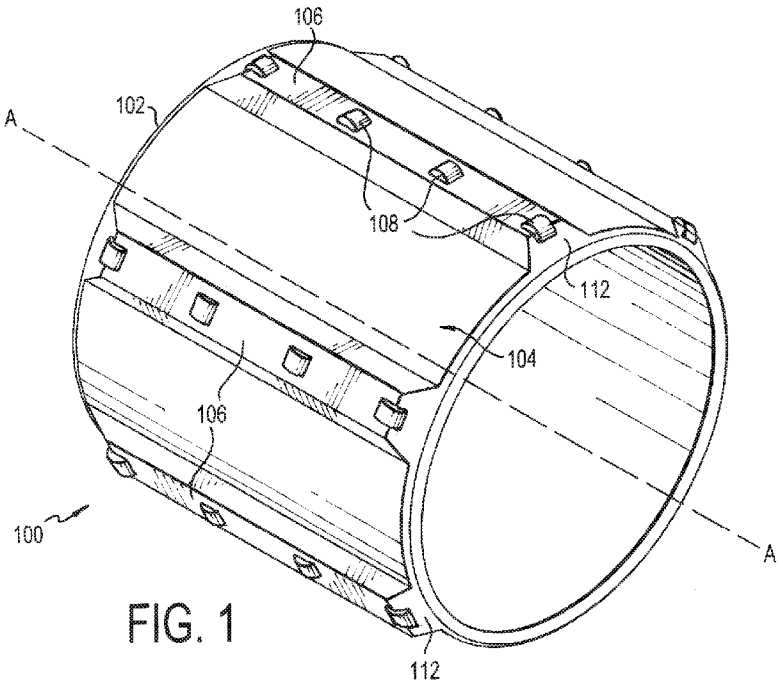

FIG. 1

(57) Abstract: The invention provides a centralizer for use with downhole operations. The centralizer is formed of a hollow, cylindrical body having an exposed outer surface and formed of a non-metallic material, a plurality of non-metallic blades protruding from the outer surface of the cylindrical body, and a plurality of wear buttons positioned on each of the plurality of blades, each of the wear buttons having a surface designed to reduce grabbing or sticking and wear of the hollow cylindrical body, such as a smooth, oval surface.

[Continued on next page]

TR), OAPI (BF, BJ, CF, CG, CI, CM, GA, GN, GQ, GW, KM, ML, MR, NE, SN, TD, TG).

Published:

— *with international search report (Art. 21(3))*

POLYMER-BASED CENTRALIZER FOR DOWNHOLE DRILLING APPARATUS

Field of the Invention

[0001] The invention relates to a composite solid centralizer for downhole drilling operations, such as for use in oil or gas wells, which reduces wear and abrasion while the centralizer travels downhole as part of the casing string.

Background of the Invention

[0002] Oil and gas drilling is a complex process in which a variety of different types of equipment is used. Generally, once a well bore is drilled to a pre-set depth into the earth, a casing, typically a cylindrical tube, is run into the well bore and cemented in place. This provides structural stability to the well and permits the operator to selectively produce and treat only certain zones. To ensure that the casing is centered in the well bore, so that it does not lean against the wall of the well bore, a device called a centralizer is positioned around the casing. The purpose of centralizers is at least two-fold. First, while the casing string is being run into the hole, the centralizers reduce the torque and drag factors seen by the operator while getting the casing to depth (some are designed to allow the casing string to rotate independently to further reduce friction while running in the hole). Another purpose is to center (or centralize) the casing once it has been run to total depth, so that when the cement is pumped, it can circulate all around the casing string to provide a good cement job. Typically, this means that cement has successfully been placed 360 degrees around the casing without a noticeable "wide" or "narrow" side to the annulus. Centralizers are typically formed as hollow-cylindrical tubes, although other types of centralizer geometries are also known. Once the casing is in place and is centered in the well bore with the centralizer, cement is pumped around the outer surface of the casing, between the outer surface of the casing and the wall of the well bore, in order to seal the well bore and to structurally support

the casing. Once total depth is reached and all casing strings are cemented in the hole, the well can be selectively completed to allow oil to be extracted through the casing in a controlled manner.

[0003] Use of a centralizer in this process is important because, if the casing is not centered in the well bore, the annular cement layer will not form a strong bond in the area where the casing makes contact with the wall of the well bore, thus reducing the mechanical integrity of the well and reducing the proficiency of zonal isolation between formations. Conventional centralizers come in a variety of types, including solid centralizers which are formed of a hollow, cylindrical body having longitudinal blades on an outer surface extending along a length thereof. The blades can be solid, or spring-like blades. Solid centralizers are typically formed of metal or polymer materials. The spring-like blades are typically made of a metal material. Conventional steel or aluminum centralizers work well for their intended purpose, but they are heavy, difficult to handle, and do not provide a low coefficient of friction between the centralizer and the well wall (either casing, if there is casing already set in the upper portion of the well, or formation) thus causing the centralizers to experience high torque and drag forces. Polymer-based centralizers have become an attractive alternative to metal or alloy-based centralizers to alleviate some of the problems above. Use of a polymer material greatly reduces the coefficient of friction, thus reducing the torque and drag forces to which the centralizers are objected. However, polymer-based centralizers have their own disadvantages, in that they are worn down more easily by the abrasive forces of running in hole due to their lower mechanical strength. As a result, they can be worn down completely in some cases, thereby eliminating the centralizing function and potentially causing poor cement jobs where the casing string lays directly against the formation, thus increasing the health, safety, and environmental concerns, since the zones in the formation may not be effectively isolated.

[0004] Some attempts have been made to include projections on an outer surface of the centralizer, particularly the centralizer blades, to reduce the frictional forces exerted on the centralizer. For example, metallic centralizers have been formed with Teflon™ projections on an outer surface of the centralizer in order to reduce torque and drag forces while running downhole. However, such projections are sacrificial, i.e. wear down quickly, as the mechanism to reduce frictional forces, thus reducing torque and drag on the centralizer. That can be effective when the underlying blades are made of metal so as not to be sacrificed themselves, but in the situation where the underlying blade is a polymer material, the blade itself would also be quickly sacrificed, causing the problems outlined above.

[0005] What is needed is a solution for polymer blades to reduce wear and abrasion without sacrificing the wear reducers and subsequently the polymer blades themselves.

Summary of the Invention

[0006] Accordingly, the invention is directed to a polymer-based solid centralizer with solid polymer blades, where buttons of material specifically designed to reduce wear and abrasion are added to the exterior of the blades to reduce wear and abrasion experienced when running downhole, thereby extending the life of the centralizer and reducing the risk of catastrophic failure of the well.

[0007] One aspect of the invention is a centralizer for use with downhole operations, such as drilling apparatus, which includes a hollow, cylindrical body having an exposed outer surface and formed of a non-metallic material, a plurality of blades formed of non-metallic material, protruding from the outer surface of the hollow cylindrical body, and a plurality of wear buttons positioned on each one of the plurality of blades, each of the wear buttons having a surface designed to reduce friction.

[0008] Another aspect of the invention is a centralizer for use in downhole processes, which includes a hollow, cylindrical body having an exposed outer surface and formed of a

non-metallic composite material, a plurality of non-metallic blades protruding from the outer surface of the cylindrical body and oriented in a parallel or spiral arrangement, and a plurality of substantially cylindrical ceramic wear buttons positioned on each of the plurality of blades, each of the wear buttons having an exposed and smooth curved surface.

[0009] The invention is also directed to a centralizer for use with downhole apparatus, which includes a hollow, cylindrical body having an exposed outer surface and formed of a non-metallic material, a plurality of blades protruding from the outer surface of the hollow cylindrical body, a plurality of wear buttons protruding from each one of the plurality of blades, each of the wear buttons having a surface designed to reduce friction. The plurality of blades and plurality of wear buttons are formed of the same non-metallic material.

Brief Description of the Drawings

[0010] A more complete appreciation of the invention and many of the attendant advantages thereof will be readily obtained as the same becomes better understood by reference to the following detailed description when considered in connection with the accompanying drawings, wherein:

[0011] FIG. 1 is a perspective view of a centralizer in accordance with an embodiment of the invention;

[0012] FIG. 2 is side plan view of a blade of the centralizer illustrated in FIG. 1;

[0013] FIG. 3 is a perspective view of a centralizer in accordance with an embodiment of the invention; and

[0014] FIG. 4 is a perspective view of a centralizer in accordance with an embodiment of the invention.

Detailed Description

[0015] As described herein, the solid centralizer of the invention may be used in downhole applications, such as in oil and gas wells, to help to center the casing in the

wellbore. Once the casing is in place and is centered by the centralizer, cement is poured around the outer surface of the casing, between the outer surface of the casing and the wall of the well bore, in order to seal the well bore and to structurally support the casing. If the casing is not centered in the well bore, the annular cement layer will not form a strong bond in the area where the casing makes contact with the wall of the well bore, thus reducing the mechanical integrity of the well. The invention provides a non-metallic solid centralizer that is easy to handle in the field and that reduces wear down caused by the abrasive effect of the run-in-hole and pumping processes.

[0016] In one embodiment, the centralizers disclosed herein are preferably formed of a non-metallic material, so as to decrease their weight and make them easier to handle when in use. The centralizers of the invention may be formed of, for example, polymers, including plastics, resins, phenolic-based compounds, and nylon-based compounds, composites, such as filament wound composites formed of carbon fiber or fiberglass materials, and injection grade materials. This list is not exhaustive, and any non-metallic material that provides the structural integrity similar to those described may be used to form the centralizers of the invention.

[0017] As illustrated in FIGS. 1 and 2, a centralizer 100 according to an embodiment of the invention is generally formed of a hollow, cylindrical body 102 (the "body 102") having an outer surface 104. The centralizer 100 includes a plurality of protruding blades 106 extending along a length of the outer surface 104 of the body 102. In one embodiment, each of the blades 106 extends along the entire length of the outer surface 104 of the body from one end to the other end, i.e. the blades are straight along the longitudinal body 102 of the centralizer 100. In the embodiment illustrated in FIG. 1, the blades 106 are oriented such that they are parallel to one another and parallel to an axis A upon which the length of the body

102 extends. The blades 106 may be formed integrally with the body 102, or the blades 106 may be coupled to the body 102 using any attachment mechanisms known in the art.

[0018] As shown in FIG. 2, each of the blades 106 may have a generally rectangular shape, with beveled edges 112 at either end. In an alternative embodiment not shown, the blades 106 may not have the beveled edges 112 and may have a purely rectangular shape. In yet another embodiment, the blades 106 may be ovular, such that the blade 106 has a slight curvature from one end to the other end.

[0019] The centralizer 100 further includes a plurality of wear buttons 108 that are positioned on each of the blades. In one embodiment, each of the blades 106 has at least two (2) wear buttons 108, but preferably at least three (3) wear buttons 108, and more preferably at least four (4) wear buttons 108 (as illustrated in FIG. 1). It should be noted, however, that the number of wear buttons 108 on each blade 106, and in total, may vary depending on the size of the centralizer 100 and the particular application. The wear buttons 108 are preferably positioned such that there is one at either end of the blade 106, such that they are located at the interface of the maximum outer diameter of the blade 106 and the entry angle of the centralizer, otherwise known as the beveled edge 112. In one embodiment, the wear buttons 108 are preferably spaced equally apart from one another along each of the blades 106 so as to evenly distribute the load upon any given blade 106.

[0020] The wear buttons 108 may take a variety of shapes and sizes, as long as their exposed surface 110 (see FIG. 2) has a smooth interface so as not to induce "grabbing" or "biting" into the casing material or formation as the centralizer 100 is run into the hole, which would increase the abrasive forces imposed on the centralizer 100. In one embodiment, each wear button 108 is generally formed of a substantially cylindrical shape having an exposed surface 100 that takes the shape of a curved face aligned with axis A of the length of the body

102 (see FIG. 1). In other embodiments, the wear buttons 108 may have a substantially spherical or ovular shape, or any other geometry that is smooth on the exposed surface 110.

[0021] The wear buttons 108 are preferably formed of a hard, resilient material that is different than the non-metallic material used to form the rest of the centralizer 100. For example, the material used to form the wear buttons 108 may include, but is not limited to, ceramic, polyetheretherketone (PEEK), carbides, zirconia, or combinations thereof. These non-metallic materials will generally have a coefficient of friction to steel that is less than 0.8 (value for steel on steel), preferably with coefficients of friction to steel less than 0.35 (bronze on steel), more preferably with coefficients of friction to steel that are largely similar to 0.05 (PTFE on steel). These materials reduce the effect of abrasion and are therefore much less likely to wear down during use as compared to other known centralizer designs. In this way, the integrity of the centralizer 100, and thus the entire oil or gas well, may be improved. In one embodiment, each of the wear buttons 108 is formed of the same material, such as one of those set forth above. In an alternative embodiment, the wear buttons 108 may be formed of a mixture of materials, such as one or more of those set forth above. In another embodiment, each button 108 may be made of one of the materials listed above, but the blades 106 may have buttons 108 of different materials installed, such as if certain parts of the blades 106 are expected to receive the most wear, potentially higher quality, more expensive material can be used for buttons in that area, where less efficient but less expensive material may be used for the remaining buttons 108.

[0022] In one embodiment, the wear buttons 108 are coupled to each of the blades 106 using either chemical or mechanical attachment methods. In another embodiment, the buttons 108 are molded into and made integral with the blades 106. It should be noted that while the preferred embodiments discuss buttons 108, the invention could use strips of wear resistant material or other types of configurations of the non-wear material where the material

is designed to be in contact with the casing or formation while running in the hole without catching or grabbing so as to redistribute the observed frictional force across the entire strip and not isolate it to a singular button.

[0023] In another embodiment illustrated in FIG. 3, a centralizer 300 has generally the same shape as centralizer 100, but the blades 306 are oriented in a spiral pattern along the length of the body 102. The centralizer 300 of FIG. 3 also preferably includes wear buttons 108 similar to those illustrated in FIGS. 1 and 2, with similar shape, size and location, or any other geometry contemplated herein. Likewise, the non-wear material could be applied in strips or other configurations to reduce wear and abrasion going in the hole.

[0024] In yet another embodiment illustrated in FIG. 4, centralizer 400 has generally the same shape as centralizer 100, but the blades 406 are formed of the same material as the wear buttons 108, including those example materials set forth herein. In this way, each singular pad has the properties of the wear buttons 108, but encompasses the whole blade 406. In this embodiment, the blades 406 may be formed integrally with the wear buttons 108, or the wear buttons 108 may be attached using the mechanisms set forth herein to each of the blades 406.

[0025] Although this invention has been described in connection with specific forms and embodiments thereof, it will be appreciated that various modifications other than those discussed above may be resorted to without departing from the spirit or scope. For example, equivalent elements may be substituted for those specifically shown and described, certain features may be used independently of other features, and in certain cases, particular locations of elements may be reversed or interposed, all without departing from the spirit or scope as defined in the appended Claims.

What is claimed is:

1. A centralizer for use with downhole apparatus, comprising:

a hollow, cylindrical body having an exposed outer surface and formed of a non-metallic material;

a plurality of blades formed of non-metallic material, protruding from the outer surface of the hollow cylindrical body; and

a plurality of wear buttons positioned on each one of the plurality of blades, each of the wear buttons having a surface designed to reduce friction.

2. The centralizer of claim 1, wherein the non-metallic material is selected from the group consisting of polymers, resins, and composites comprising non-metallic materials.

3. The centralizer of claim 2, wherein the polymers include phenolic-based compounds and nylon-based compounds.

4. The centralizer of claim 2, wherein the composites include filament wound composites of carbon fiber or fiberglass.

5. The centralizer of claim 1, wherein the surface of each of the plurality of wear buttons is an exposed, smooth surface.

6. The centralizer of claim 1, wherein the exposed, smooth surface of each of the plurality of wear buttons has a curved face.

7. The centralizer of claim 1, wherein each of the plurality of blades includes at least two of the wear buttons.

8. The centralizer of claim 1, wherein each of the plurality of blades includes at least four of the wear buttons, each of the wear buttons being spaced equally apart along a length of each of the plurality of blades.

9. The centralizer of claim 1, wherein each of the plurality of wear buttons has a substantially cylindrical, spherical, or ovular shape.

10. The centralizer of claim 1, wherein the plurality of wear buttons are formed of polytetrafluoroethylene, polyetheretherketone, ceramic, carbide, zirconia, or combinations thereof.

11. The centralizer of claim 1, wherein the plurality of wear buttons function to reduce abrasive forces exerted upon the centralizer when in use.

12. The centralizer of claim 1, wherein the plurality of wear buttons are formed of two or more different materials.

13. A centralizer for use with downhole apparatus, comprising:

a hollow, cylindrical body having an exposed outer surface and formed of a non-metallic composite material;

a plurality of non-metallic blades protruding from the outer surface of the cylindrical body and oriented in a parallel or spiral arrangement; and

a plurality of ceramic wear buttons positioned on each of the plurality of blades, each of the wear buttons having an exposed and smooth curved surface.

14. A centralizer for use with downhole apparatus, comprising:

a hollow, cylindrical body having an exposed outer surface and formed of a non-metallic material;

a plurality of blades protruding from the outer surface of the hollow cylindrical body; and

a plurality of wear buttons protruding from each one of the plurality of blades, each of the wear buttons having a surface designed to reduce friction,

wherein the plurality of blades and plurality of wear buttons are formed of the same non-metallic material.

15. The centralizer of claim 14, wherein the plurality of wear buttons are formed integrally with each of the plurality of blades.

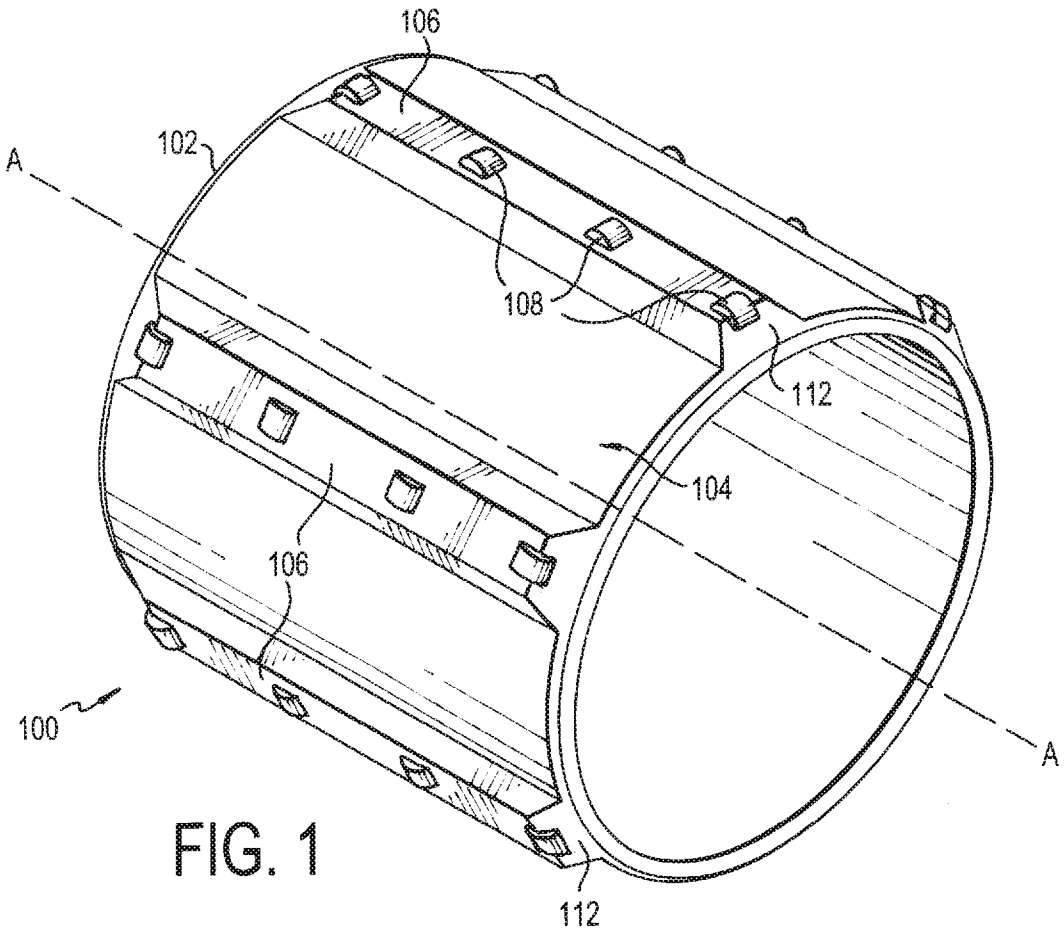

FIG. 1

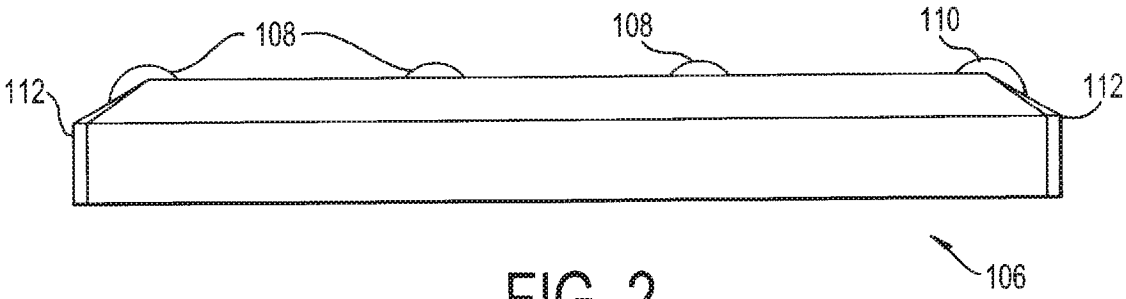

FIG. 2

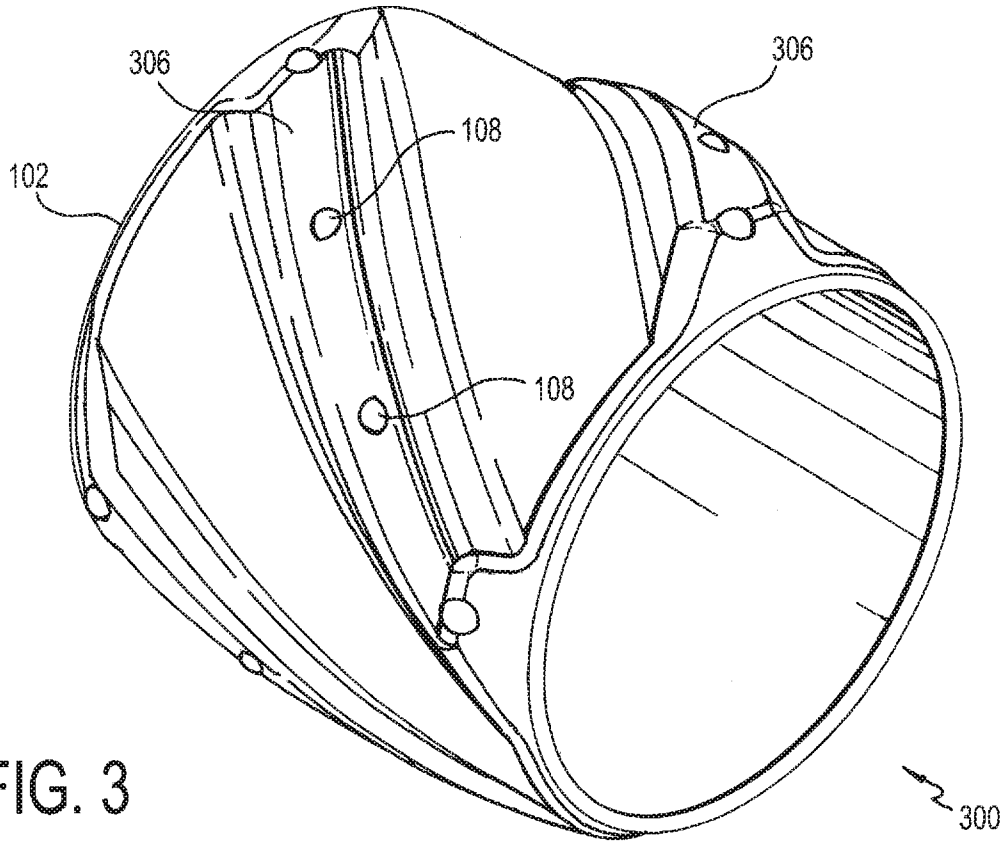

FIG. 3

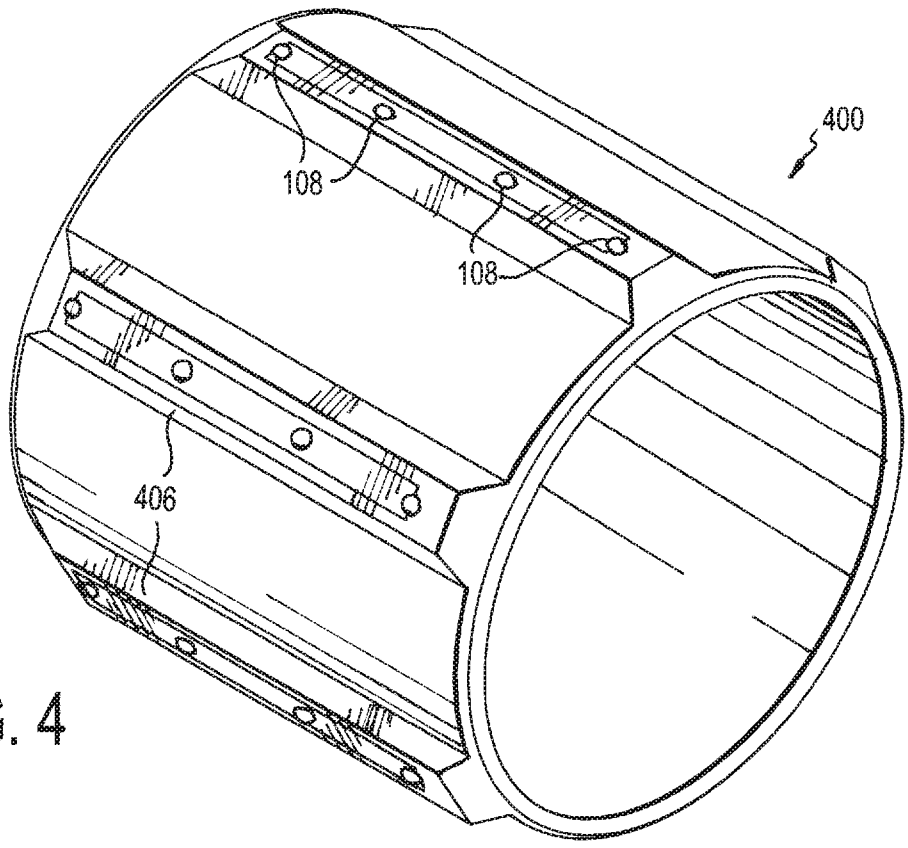

FIG. 4

INTERNATIONAL SEARCH REPORT

International application No.
PCT/US2017/045779

A. CLASSIFICATION OF SUBJECT MATTER
IPC(8) - E21B 17/10; E21B 17/22; E21B 19/24 (2017.01)
CPC - E21B 17/1078; E21B 17/10; E21B 17/1042 (2017.08)

According to International Patent Classification (IPC) or to both national classification and IPC

B. FIELDS SEARCHED

Minimum documentation searched (classification system followed by classification symbols)
See Search History document

Documentation searched other than minimum documentation to the extent that such documents are included in the fields searched
USPC - 166/241.6; 175/325.1; 175/325.5 (keyword delimited)

Electronic data base consulted during the international search (name of data base and, where practicable, search terms used)
See Search History document

C. DOCUMENTS CONSIDERED TO BE RELEVANT

Category*	Citation of document, with indication, where appropriate, of the relevant passages	Relevant to claim No.
X --- Y	US 2003/0010540 A1 (KIRK et al) 16 January 2003 (16.01.2003) entire document	1, 5-15 --- 1-4
Y	US 2011/0114338 A1 (CASASSA et al) 19 May 2011 (19.05.2011) entire document	2, 3
Y	US 2013/0319690 A1 (LEVIE et al) 05 December 2013 (05.12.2013) entire document	2, 4
A	US 6,283,205 B1 (CANNON) 04 September 2001 (04.09.2001) entire document	1-15
A	WO 2016/028260 A1 (HALLIBURTON ENERGY SERVICES, INC.) 25 February 2016 (25.02.2016) entire document	1-15

☐ Further documents are listed in the continuation of Box C. ☐ See patent family annex.

* Special categories of cited documents:
"A" document defining the general state of the art which is not considered to be of particular relevance
"E" earlier application or patent but published on or after the international filing date
"L" document which may throw doubts on priority claim(s) or which is cited to establish the publication date of another citation or other special reason (as specified)
"O" document referring to an oral disclosure, use, exhibition or other means
"P" document published prior to the international filing date but later than the priority date claimed
"T" later document published after the international filing date or priority date and not in conflict with the application but cited to understand the principle or theory underlying the invention
"X" document of particular relevance; the claimed invention cannot be considered novel or cannot be considered to involve an inventive step when the document is taken alone
"Y" document of particular relevance; the claimed invention cannot be considered to involve an inventive step when the document is combined with one or more other such documents, such combination being obvious to a person skilled in the art
"&" document member of the same patent family

Date of the actual completion of the international search	Date of mailing of the international search report
28 September 2017	19 OCT 2017
Name and mailing address of the ISA/US Mail Stop PCT, Attn: ISA/US, Commissioner for Patents P.O. Box 1450, Alexandria, VA 22313-1450 Facsimile No. 571-273-8300	Authorized officer Blaine R. Copenheaver PCT Helpdesk: 571-272-4300 PCT OSP: 571-272-7774