(No Model.) 3 Sheets—Sheet 1.

W. F. SINGER.

STATIONARY AUTOMATIC FIRE EXTINGUISHER.

No. 456,500. Patented July 21, 1891.

Fig. 1.

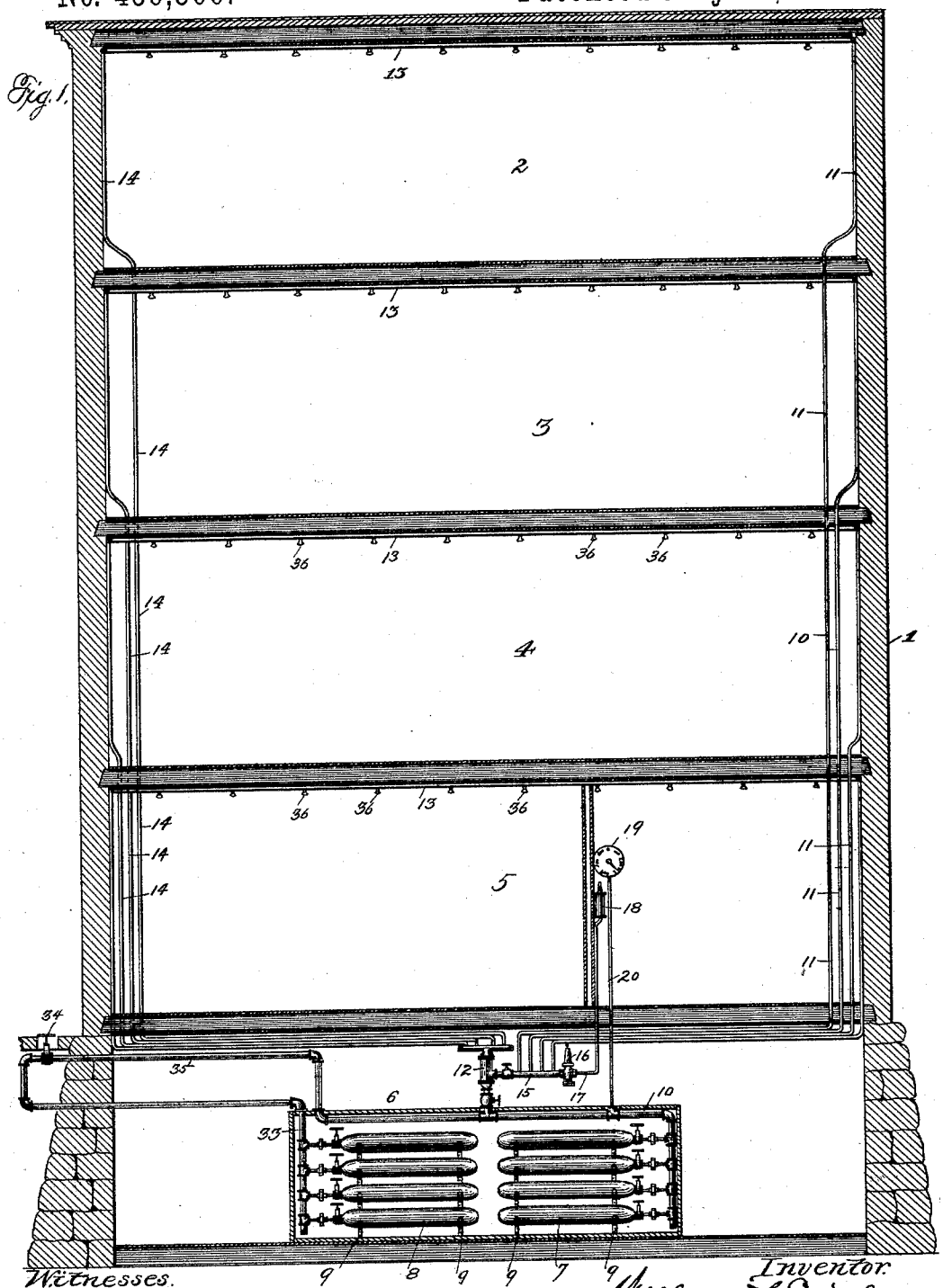

Witnesses.
Wm. M. Rheems.
Edward L. Wyllen

Inventor.
William F. Singer
by Franklin H. Hough
his attorney

THE NORRIS PETERS CO., PHOTO-LITHO., WASHINGTON, D. C.

(No Model.) 3 Sheets—Sheet 2.

W. F. SINGER.

STATIONARY AUTOMATIC FIRE EXTINGUISHER.

No. 456,500. Patented July 21, 1891.

Fig. 2.

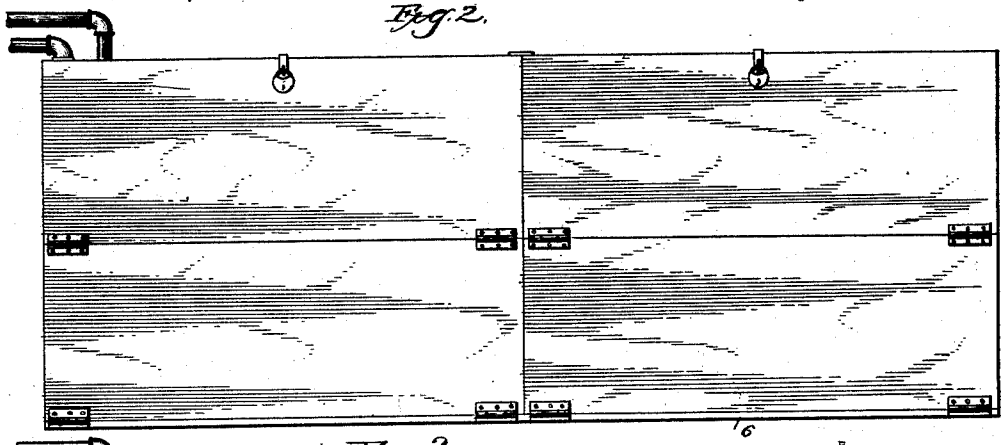

Fig. 3

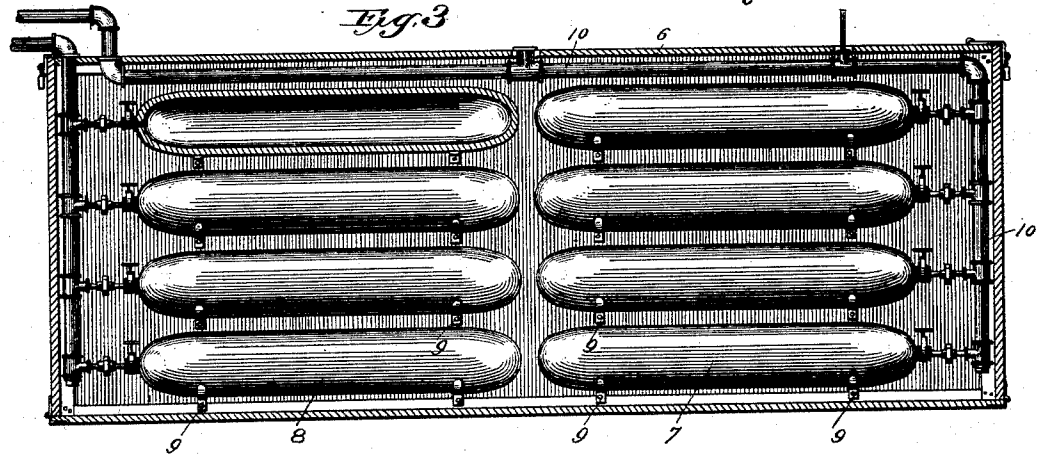

Fig. 4.

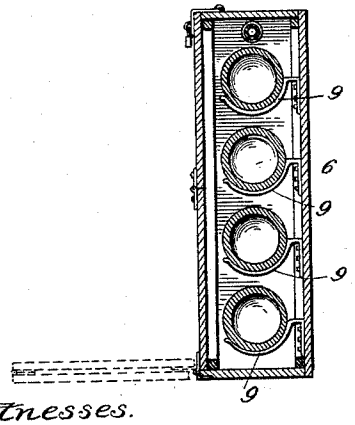

Fig. 8.

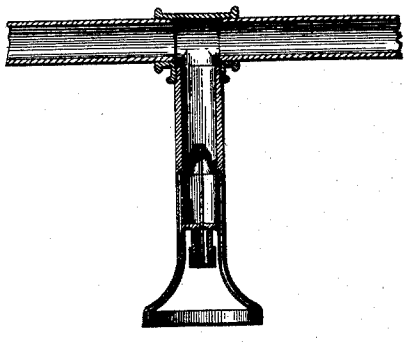

Witnesses.
Wm. M. Rheem.
E. Wurdeman.

Inventor.
William F. Singer
by Franklin H. Hough
his Attorney

THE NORRIS PETERS CO., PHOTO-LITHO., WASHINGTON, D. C.

(No Model.) 3 Sheets—Sheet 3.

W. F. SINGER.

STATIONARY AUTOMATIC FIRE EXTINGUISHER.

No. 456,500. Patented July 21, 1891.

Fig. 5

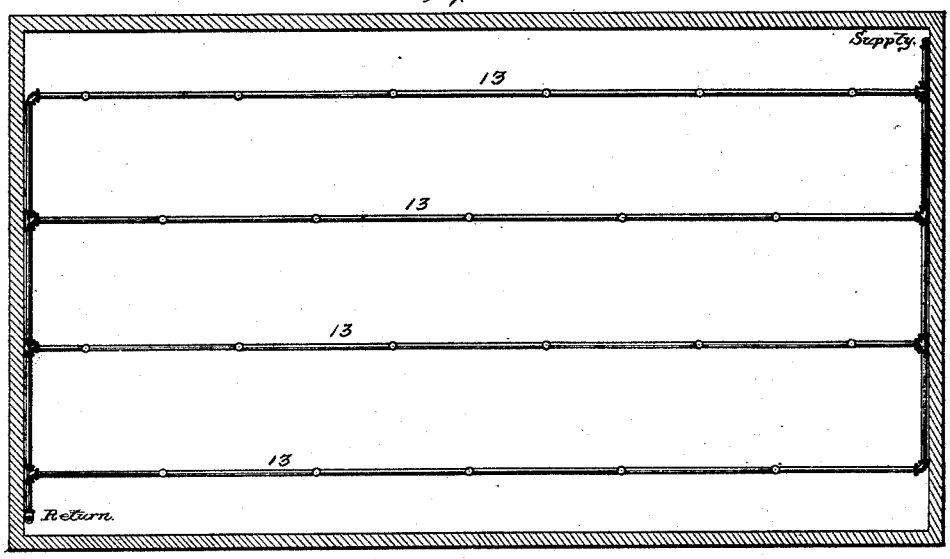

Fig. 6.

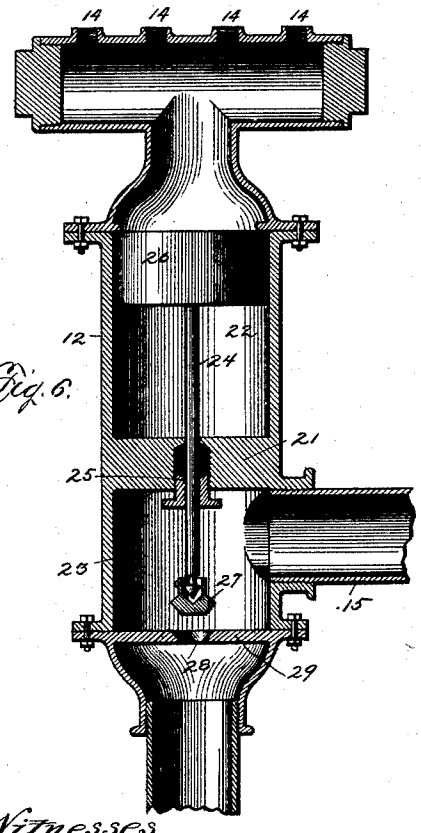

Fig. 7.

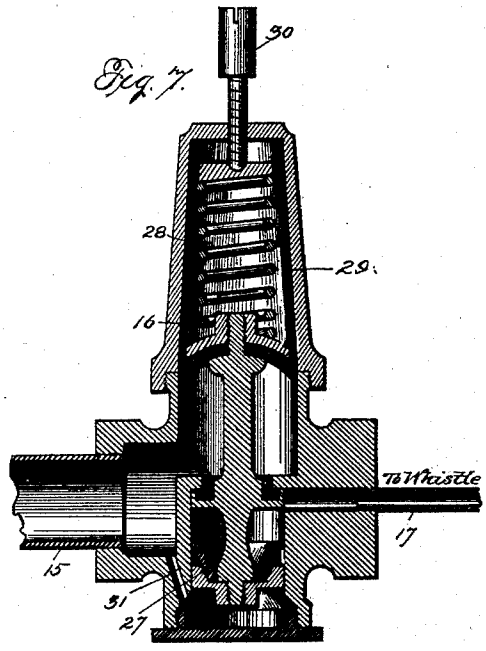

Witnesses
Wm. M. Rheem.
Edward N. Wilcox

Inventor.
William F. Singer
by Franklin H. Hough
his Attorney

THE NORRIS PETERS CO., PHOTO-LITHO., WASHINGTON, D. C.

UNITED STATES PATENT OFFICE.

WILLIAM F. SINGER, OF CARTHAGE, ASSIGNOR OF ONE-HALF TO GILBERT L. HAVILAND, OF SYRACUSE, NEW YORK.

STATIONARY AUTOMATIC FIRE-EXTINGUISHER.

SPECIFICATION forming part of Letters Patent No. 456,500, dated July 21, 1891.

Application filed July 28, 1890. Serial No. 360,237. (No model.)

To all whom it may concern:

Be it known that I, WILLIAM F. SINGER, a citizen of the United States, residing at Carthage, in the county of Jefferson and State of New York, have invented certain new and useful Improvements in Stationary Automatic Fire-Extinguishers; and I do declare the following to be a full, clear, and exact description of the invention, such as will enable others skilled in the art to which it appertains to make and use the same, reference being had to the accompanying drawings, and to the figures of reference marked thereon, which form a part of this specification.

This invention relates to certain new and useful improvements in stationary automatic fire-extinguishers; and it has for its objects to provide buildings with systems of pipes so arranged in connection with storage-reservoirs charged with condensed non-combustible gases that the gases may be automatically carried to and liberated in the apartment in which fire may originate, thus providing an effectual automatic fire-extinguishing apparatus which will serve to effectually extinguish fires without injuring the building or goods contained therein by the use of water, as is frequently the case where hydraulic appliances are used.

The invention has for its further object to provide in connection with the system an auxiliary series of charged gas-reservoirs, which are so arranged as to be readily brought into service when required.

The invention has for a further object to provide in connection with the system an automatic alarm which will serve to give notice of any escape of gas, whether the same may be occasioned by leakage or by actual fire.

Another object of the invention is to provide a suitable gage which will at all times indicate the pressure of the gas within the storage-chambers.

To these ends, and to such others as the invention may pertain, the same consists in the peculiar construction, and in the novel combination, arrangement, and adaptation of parts, all as more fully hereinafter described, shown in the accompanying drawings, and then specifically defined in the appended claim.

The invention is clearly illustrated in the accompanying drawings, which, with the figures of reference marked thereon, form a part of this specification, like figures of reference indicating like parts throughout the several views, and in which drawings—

Figure 1 is a vertical section of a building provided with my improved system of automatic fire-extinguisher. Fig. 2 is a side view of the case containing the gas-storing reservoirs. Fig. 3 is a central vertical longitudinal section of the case. Fig. 4 is a transverse section of the same. Fig. 5 is a bottom plan view of the ceiling of one of the rooms in the equipped building. Fig. 6 is a central vertical section through the pressure-reducing valve, and Fig. 7 is a central vertical section of the valve controlling the automatic alarm. Fig. 8 is enlarged vertical longitudinal section of one of the sprinkler-heads and a portion of the connecting-pipe.

Reference now being had to the details of the drawings by figures of reference, 1 designates a building, and 2, 3, 4, and 5 the various stories of the same. Within a suitable case or chamber 6 in the basement of the building is stored two separate series of gas-reservoirs 7 and 8. These reservoirs are preferably arranged one above another and are in the present instance shown as supported upon suitable arms or brackets 9, extending from the rear inner wall of the case. These reservoirs are adapted to contain non-combustible gas under a high state of compression. The reservoirs in series 7 are each connected with the common pipe 10, from which the gas is admitted to the pipes 11 after passing through the pressure-reducing valve 12, and thence is conducted through the various pipes 13 and returned by the pipes 14 to the upper portion of the valve 12, where it serves to automatically regulate the further supply of gas from the reservoirs.

The pipe 15, leading from the valve 12, is provided with an extension 17, which leads to an alarm-whistle 18, and an automatically-operated valve 16, interposed upon said pipe

17, serves to regulate the supply of gas to the whistle, as will be more fully hereinafter described, while a gage 19 upon the pipe 20 serves to indicate at all times the pressure of the gas within the reservoirs.

Upon reference to Fig. 6 of the drawings the construction and operation of the valve 12 for reducing the pressure of the gas within the building-pipes will be more readily understood. It will be observed that the body portion of this valve is divided by means of the central horizontal partition 21 into two chambers 22 and 23, and passed vertically through the partition 21 is the piston-rod 24, a suitable gland and stuffing-box 25 being provided within the partition 21. A piston 26 is provided at the upper end of the piston-rod 24, and at the lower end of the rod is provided with a valve 27, adapted, when the rod is at its lowest point, to close the opening 28 in the valve-seat 29.

The operation of the valve 12 is as follows: The gas entering through the valve-controlled opening 28 serves to force the piston upward, thus admitting the gas to the pipe 15, whence it passes through the pipes of the building system, and after the said pipes have been filled the gas enters the upper chamber of the valve-case, exerting a pressure upon the upper face of the piston 26, the diameter of which being much greater than the bearing-surface afforded by the valve 27 at the lower end of the piston-rod the pressure of but a few pounds upon the piston will serve to seat the valve against the greater pressure of the gas within the storage-chambers.

I will now describe the operation of the valve 16, which serves to regulate the supply of gas to the whistle. It will be observed that the said valve is placed upon the extreme end of the pipe 15, and that the whistle-pipe 17, which is of much smaller diameter, connects with the opposite side of the valve-case. The vertically-moving valve is provided with a conical bottom portion, and it will also be noted that within the chamber 28 above the upper end of the valve is placed a spiral spring 29, said spring having a direct bearing upon the upper end of the valve, the tension of the said spring being regulated by the set-screw 30, passed vertically through the upper end of the valve-case. A small tube or passage-way 31 connects the pipe 15 with the space beneath the lower end of the valve and serves to admit the gas beneath the valve, where it serves to raise the valve against the tension of the spring 29, and thus close the outlet to the whistle-pipe. When the spring 29 forces the valve down, the whistle-pipe will be opened. The tension of the spring upon the valve having been properly adjusted in accordance with the pressure known to exist upon the pipes in the building, the gas at this predetermined pressure will serve to sound the whistle; but a slight discharge of the gas caused by a fire or by other escape will, after a very short interval, serve to sufficiently reduce the pressure upon the lower end of the valve to enable the tension of the spring 29 to force the valve downward, and thus close the inlet to the whistle-pipe.

The series of storage-reservoirs 8 constitute an auxiliary storage-supply. These reservoirs communicate with the pipe 33, which is common to all of the reservoirs in the series, said pipe leading to a point outside of the building, where it is provided with a valve 34, and thence by the pipe 25 it communicates with the lower end of the pressure-reducing valve 12.

The pipes 13, which are arranged in proximity to the ceiling of the several apartments of the building, are provided at intervals with gas-distributing outlets 36, which may be of any of the various forms of heads adapted to the purpose, such as are usually controlled by valves held in place by fusible solder or other like substances.

It will be seen from the foregoing description that the pressure of the gas within the building-pipes will be at all times a nominal one, and in the event of leakage from any cause, whether the same be due to an accident or to actual opening of the distributers by an increase of temperature, that the supply of gas will be at all times maintained. The gage 19 enables a person to any time determine the pressure of the gas within the storage-chambers and approximately to know the pressure upon the building-pipes.

In case of necessity the auxiliary gas-supply contained in the series 8 of reservoirs may be brought into use by simply turning the valve 34 upon the outside of the building.

Having thus described my invention, what I claim to be new, and desire to secure by Letters Patent, is—

The combination of the building-pipes, the gas-receptacle, the pipe connecting the same, the valve interposed between the gas-receptacle and the building-pipes and adapted to normally regulate the pressure within the building-pipes and to allow free ingress of the gas upon occasion of leakage, the indicating-gage connected with the pipe leading from the gas-receptacle, an alarm-whistle connected with the pipes of the building system and adapted to be sounded automatically upon occasion of increased pressure therein caused by leakage, an auxiliary gas-receptacle connected with the pipes of the building system, and means, as the valve 34, located upon the outside of the building for admitting the gas from the auxiliary receptacle to the building-system pipes, substantially as and for the purpose described.

In testimony whereof I affix my signature in presence of two witnesses.

WILLIAM F. SINGER.

Witnesses:

FRANKLIN H. HOUGH,

C. W. CURTIS.