June 5, 1945. A. ARUTUNOFF 2,377,743

ELECTRICAL DEEP WELL RECIPROCATING PUMP ASSEMBLY

Filed March 1, 1941 4 Sheets-Sheet 1

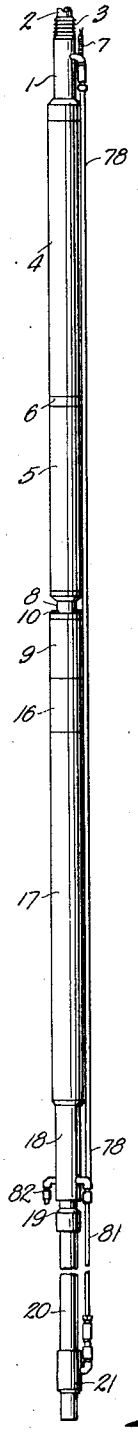

Fig. 1.

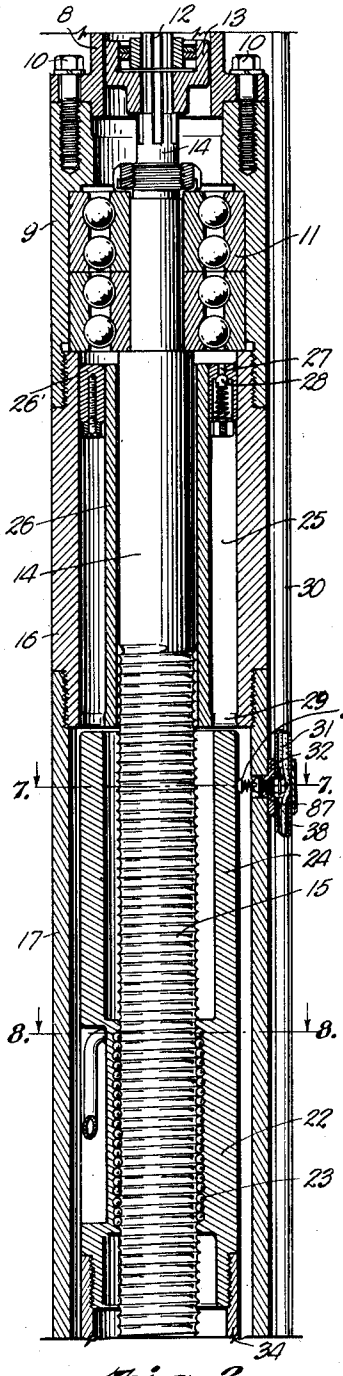

Fig. 2.

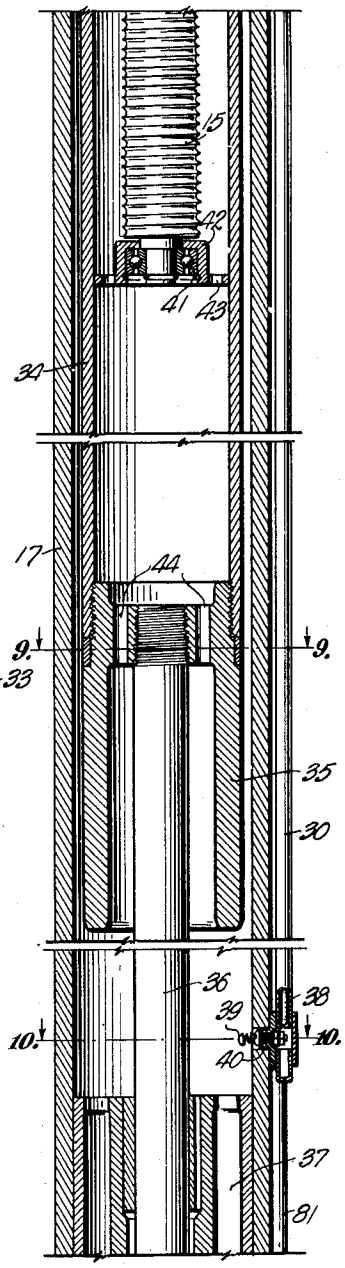

Fig. 3.

INVENTOR.
Armais Arutunoff
BY Thos. E. Scofield.
ATTORNEY.

June 5, 1945. A. ARUTUNOFF 2,377,743

ELECTRICAL DEEP WELL RECIPROCATING PUMP ASSEMBLY

Filed March 1, 1941 4 Sheets-Sheet 2

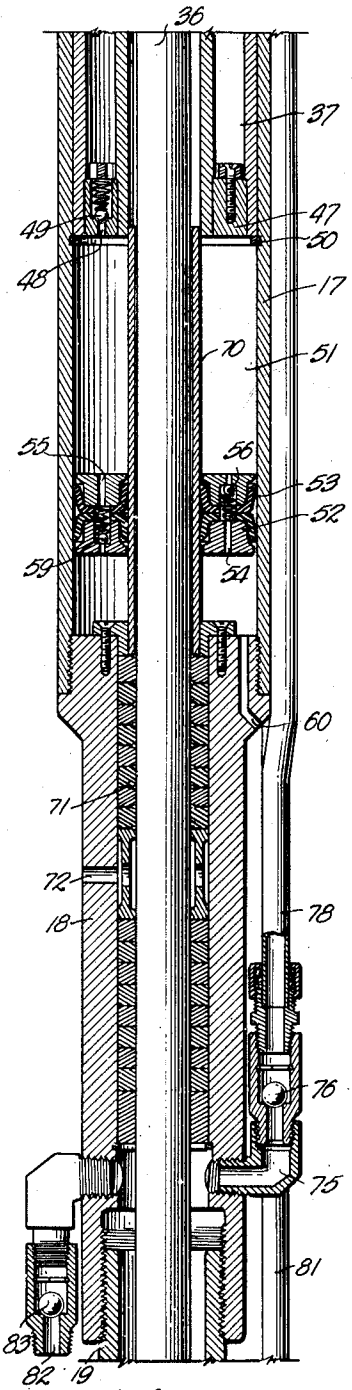

Fig. 4.

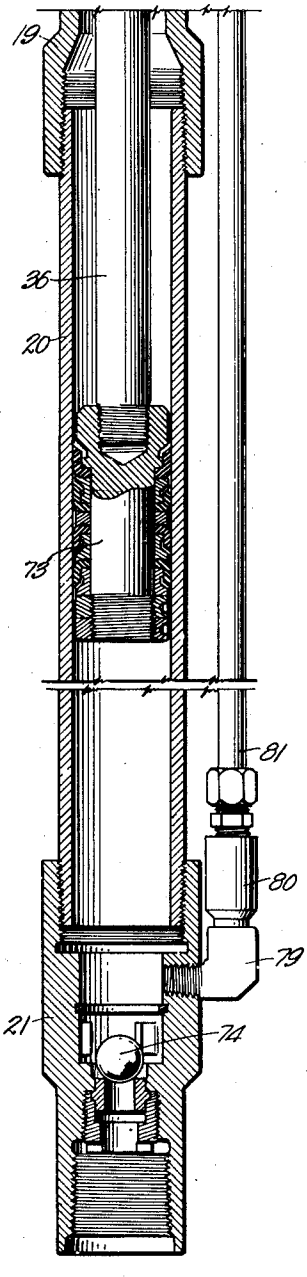

Fig. 5.

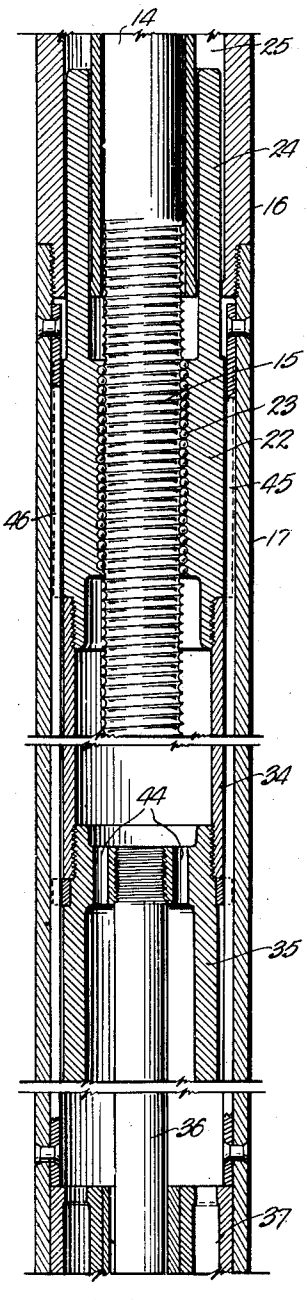

Fig. 6.

INVENTOR.
Armais Arutunoff
BY Thos. E. Scofield.
ATTORNEY.

June 5, 1945. A. ARUTUNOFF 2,377,743

ELECTRICAL DEEP WELL RECIPROCATING PUMP ASSEMBLY

Filed March 1, 1941 4 Sheets-Sheet 3

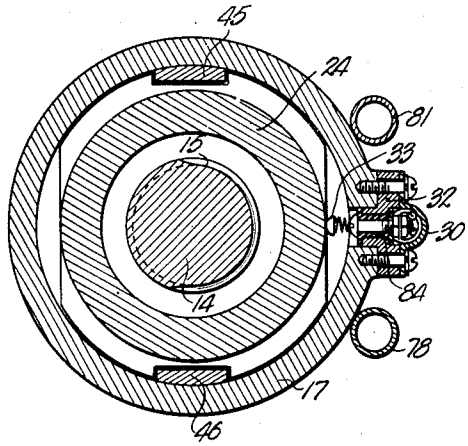

Fig. 7.

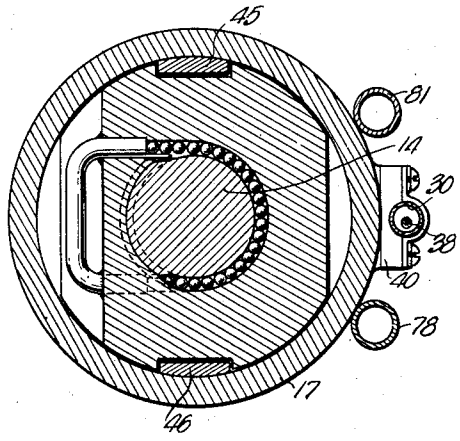

Fig. 8.

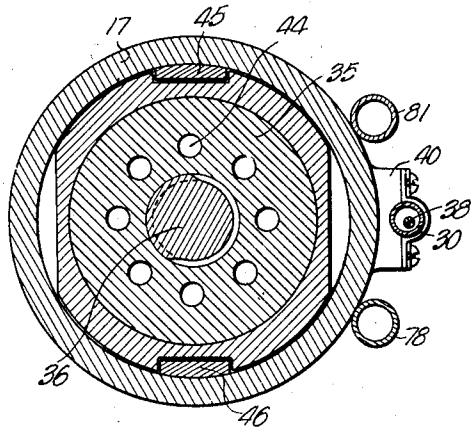

Fig. 9.

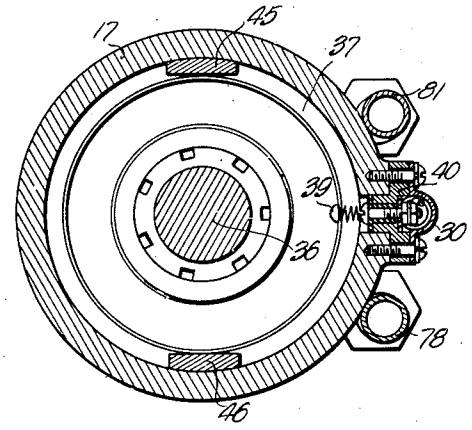

Fig. 10.

INVENTOR.
Armais Arutunoff
BY Thos. E. Scofield.
ATTORNEY.

June 5, 1945. A. ARUTUNOFF 2,377,743

ELECTRICAL DEEP WELL RECIPROCATING PUMP ASSEMBLY

Filed March 1, 1941 4 Sheets-Sheet 4

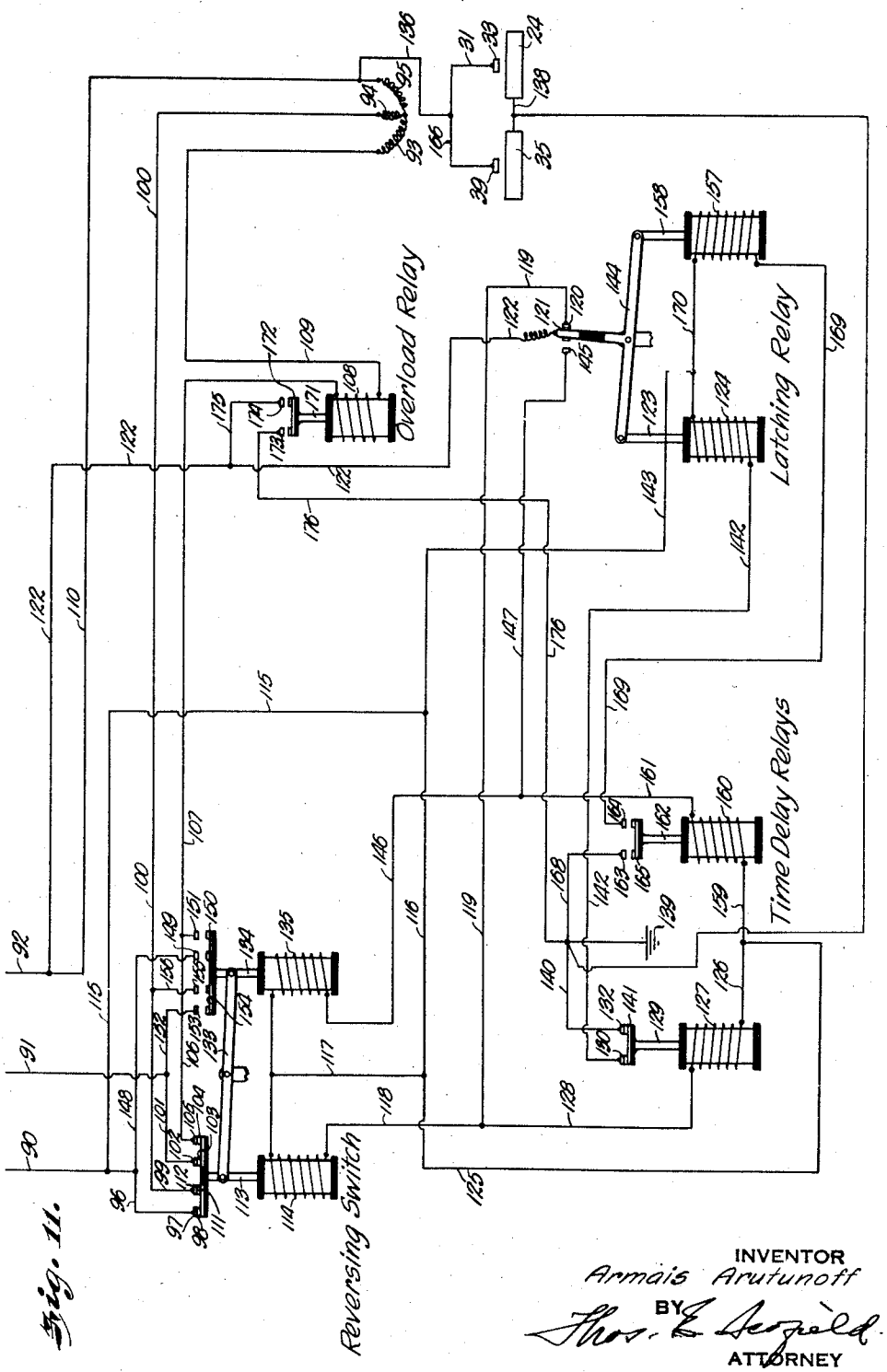

Fig. 11.

INVENTOR
Armais Arutunoff
BY
Thos. E. Scofield
ATTORNEY

Patented June 5, 1945 2,377,743

UNITED STATES PATENT OFFICE

2,377,743

ELECTRICAL DEEP WELL RECIPROCATING PUMP ASSEMBLY

Armais Arutunoff, Bartlesville, Okla., assignor to Reda Pump Company, Bartlesville, Okla., a corporation of Delaware

Application March 1, 1941, Serial No. 381,296

9 Claims. (Cl. 172—239)

My invention relates to electrical deep well reciprocating pump assemblies and more particularly to a pump and motor assembly adapted to be lowered to the bottom of a well whereby a reciprocating pump will be driven directly from an electric motor, together with electrical means for reversing the same to obtain the reciprocating motion.

This application is an improvement over my copending application, Serial No. 328,419, filed April 8, 1940.

In many areas, after the gas pressure in a field has been depleted, it is necessary to pump the oil out of the well. At present, there are two types of pumping equipment available. One is known as the "Reda" pump which comprises a multistage centrifugal pump and motor assembly. The assembly is adapted to be lowered into the well and to pump the oil out of the well without the necessity of using a long string of sucker rods. The other type of pumping equipment available comprises a reciprocating pump which is actuated through a string of sucker rods operated by any suitable means such as a motor driven walking beam. The pumping of oil with sucker rods has many disadvantages. The cost of the string of rods and the time consumed in placing the rods and removing them when it is necessary to replace valves and the like, is considerable. Sucker rods frequently break, resulting in the shutting down of pumping operations and the necessity of fishing for the broken rod string. The power consumed in reciprocating a long string of rods is so much waste in so far as the removal of oil from the well is concerned.

One object of my invention is to provide a novel motor and reciprocating pump assembly adapted to be lowered into the well, whereby oil may be pumped from the well by the reciprocating pump without the necessity of moving a long string of sucker rods.

Another object of my invention is to provide a pumping assembly which may be installed and removed from the well as a unit avoiding the time, labor and expense of handling a plurality of sections of sucker rods.

Another object of my invention is to eliminate wiring by the use of the power supply lines and lines for actuating the reversing mechanism in a single circuit, and utilizing the eduction tubing as a conductor in said circuit.

Another object of my invention is to provide a motor and reciprocating pump assembly having novel means for reciprocating the pumping means.

Other and further objects of my invention will appear from the following description.

In the accompanying drawings which form part of the instant specification and are to be read in conjunction therewith and in which like reference numerals are used to indicate like parts in the various views;

Figure 1 is an elevation of a motor pump assembly showing one embodiment of my invention.

Figure 2 is an enlarged sectional view of a portion of my pump assembly directly beneath the motor housing.

Figure 3 is an enlarged sectional view of a portion of the pump assembly directly below the portion shown in Figure 2.

Figure 4 is an enlarged sectional view of a portion of the pump assembly directly below that portion shown in Figure 3.

Figure 5 is a sectional view on an enlarged scale of the bottom section of my pump assembly.

Figure 6 is a sectional view of a portion of the pump assembly taken in the vicinity of the portion shown in Figure 2 but at right angles thereto and showing the parts at the limit of the upstroke.

Figure 7 is a sectional view taken on the line 7—7 of Figure 2.

Figure 8 is a sectional view taken on the line 8—8 of Figure 2.

Figure 9 is a sectional view taken on the line 9—9 of Figure 3.

Figure 10 is a sectional view taken on the line 10—10 of Figure 3.

Figure 11 is a diagrammatic view showing the electrical circuits involved.

Referring now to the drawings, the assembly is capped with a forging 1 communicating with eduction tubing 2 through which the liquid is delivered to the surface. The forging 1 is provided with serrations 3, adjacent the upper end thereof, adapted to receive suitable lowering clamps and fishing tools. The forging 1 is connected by a tube 4 to a housing 5 in which the electrical motor is positioned. The motor housing 5 is connected to the tube 4 by means of a fitting 6. Power is furnished to the motor through a cable 7. A connector 8 joins the motor assembly to the pump assembly. The connector 8 is bolted to a housing 9 by means of bolts 10, as can readily be seen by reference to Figure 2. The housing 9 contains the thrust bearings 11. The motor shaft terminates in the splined end 12 which is connected by connector 13 to a shaft 14 which is provided at its lower end with an elongated threaded portion 15. A connecting section 16 is threaded to a housing 17 to which a packing

housing 18 is secured. The packing housing 18 supports a connecting fitting 19 to which the pump barrel 20 is secured. A foot valve housing 21 is supported by the pump barrel 20. A nut 22 engages a threaded portion 15 of the actuating shaft through the medium of a plurality of ball bearings 23. The ball bearing nut 22 is a tool of the art and it is understood that any suitable form of nut and thread means may be employed. The screw is of small gauge and in this case I used small balls to allow a high rotation with a slow reciprocating speed of the nut 22. The nut 22 carries an upper skirt 24. The skirt 24 is really an annular piston adapted to enter an annular cylinder 25, formed by tubular member 26 and the walls of the connecting section 16. The annular cylinder 25, as well as the entire housing is normally filled with oil and acts as a hydraulic brake, as will hereinafter be described more fully. The upper portion of the cylinder is normally closed by a ring 26' provided with a plurality of ports 27, normally closed by check valves 28. The clearance at the entrance 29 of the annular cylinder 25 and the annular piston 24 is normally about two thousandths of an inch (.002").

A tube 30 alongside the pump assembly contains conductors 31 leading to the control circuit. One of these conductors makes contact through an opening normally closed by a plug 32 with a contact whisker 33.

A connecting tube 34 is threadedly secured to the lower portion of the nut 22 and carries at its lower end another annular piston 35. The pump rod 36 is also secured to the member 35 as can readily be seen by reference to Figures 3 and 9. The annular piston 35 is adapted to enter the annular cylinder 37, shown in Figures 3 and 4. The annular piston 35 and the annular cylinder 37 act as a hydraulic brake for the limit of the downstroke, as will be more fully described. The conductor housing tube 30 contains a control conductor 38, which makes electrical connection with a contact whisker 39 as can readily be seen by reference to Figure 3, through an opening normally closed by a plug 40.

The lower end of the actuating screw 15 is prevented from moving in a horizontal plane by means of a guide member 41, housed in a floating centering plate 42. The plate 42 is provided with a plurality of openings 43 to permit the free passage of oil. It is to be noted that the pump rod 36 is secured to the member 35 centrally of the lower end thereof. The member 35 is provided with a plurality of holes 44 to permit the free passage of oil during the reciprocation of the pump rod and nut. Splines 45 and 46 are secured to the interior of housing 17, as can readily be seen by reference to Figures 6, 7, 8, 9, and 10, to prevent the nut from turning with the screw. The splines allow reciprocation of the nut and associated parts, while preventing their rotation relative to the housing. The annular cylinder 37 is closed by a ring 47, fitted with a plurality of relief ports 48, normally closed by check valves 49. The annular cylinder 37 is supported from the walls of the housing 17 by means of a ring 50. The space within the housing 17 below the ring 50 forms an annular area 51 in which is positioned a floating piston 52 provided with packing members 53 and a plurality of ports 54 and 55. Ports 54 discharge into the space below the piston while ports 55 discharge into the space above the piston. Check valves 56 seat upwardly, while check valves 59 seat downwardly. The lower side of the floating piston communicates with the fluid in the well through a port 60. The piston moves to compensate for pressure differentials produced in housing 17 by reciprocation of the pumping and reversing mechanism. A tube 70 forms the inner boundary of the annular space in which the piston moves and houses the pump rod 36. The pump rod 36 passes through a packing section 18 containing packing 71. A port 72 permits leakage from the pump to be discharged into the well. The pump rod 36 carries at its lower end the pump piston or plunger 73 operating within the pump barrel 20. The pump is a double acting one. On the upstroke, fluid from the well passes the check valve 74 and flows into the pump barrel beneath the plunger 73. At the same time, fluid above the plunger is lifted, flowing through fitting 75 past check valve 76, through eduction tubing 78. On the downstroke, fluid below the plunger 73 previously taken into the pump barrel, flows outwardly through fitting 79, past check valve 80, through eduction tubing 81. On the downstroke, fluid from the well passes through intake port 82, past check valve 83 into the pump barrel above the plunger.

In operation, the motor within housing 4 is rotating the actuating screw 15 through the splined shafts 12 and 14 and the connector 13. Let us assume that the screw shaft 15 is turning in a direction to move the nut 22 upwardly. The upward motion of the nut 22 carries the connecting tube 34, the member 35 and the pump rod 36 upwardly, thus carrying the plunger 73 upwardly and lifting oil above the plunger upwardly and out through the connection 75 and eduction tubing 78, thence into the hollow forging 1 and out of the eduction tubing 2 to the surface. In the position shown in Figure 2, it will be noted that the whisker 33 which passes through plug 32 in an insulating bushing 84 (as can be seen by reference to Figure 7) has made contact with the annular piston 24.

Referring now to Figure 11 where I have shown a diagrammatic view of the electrical circuits involved, the three conductors 90, 91, and 92 are the three supply lines of the three-phase alternating current. The field winding for the induction motor which may have a squirrel cage rotor, is shown diagrammatically by the three branches 93, 94, and 95. The winding produces a rotating field which is followed by the squirrel cage rotor of the motor. In the position of parts shown in Figure 11, line 90 is connected to winding 94 through conductor 96 and contact point 97, contact point 98, contact point 111, contact point 112, conductor 99 and conductor 100. Similarly, main line wire 91 is connected to winding 93 of the field through conductor 101, contact point 102, contact point 103, contact point 104, contact point 105, conductor 106, conductor 107, the winding 108 of the overload relay, and conductor 109. The main line wire 92 is directly connected to winding 95 through conductor 110. With the three branches of the Y-connected field winding, a rotating field, rotating in one direction, will be produced. Contact points 98, 111, 103 and 104 are held in contact with contact points 97, 112, 102 and 105 respectively by the armature 113, due to the energization of the winding 114 by current flowing from main line wire 90 through conductor 115, conductor 116, conductor 117, through winding 114, through conductor 118, through conductor 119, through contact point 120, through conducting member 121, through conductor 122, thence to main line con-

ductor 92, thus completing a circuit between main line wires 90 and 92.

Contacting of contact point 120 with conducting member 121 also completes the circuit from main line wire 90 through conductor 115, through conductor 116, through conductor 125, through conductor 126, through winding 127 of the time delay relay, thence through conductor 128 to conductor 119 to contact point 120 to conducting member 121 to conductor 122, to main line wire 92. The energization of winding 127 ejects armature 129, completing the circuit between contact points 130 and 132, thus conditioning the circuit for the reversing action which will be hereinafter described.

It will be observed that the reversing switch comprises a pivoted arm 133 connected at its ends to armatures 113 and 134. Armature 134 is pushed upwardly when the winding 135 is energized.

When the whisker 33 contacts with the annular piston 24, current will flow from main line wire 92 through conductor 110, through conductor 136, through conductor 31 and thence to piston 24 through whisker 33. This circuit from main line wire 92 through whisker 33 to piston 24 is completed through the metal parts of the pumping mechanism and eduction tubing 2 diagrammatically shown in Figure 11 as a conductor 138. (This circuit may or may not be grounded as shown at 139.) From the eduction tubing 2 the circuit is completed through conductor 140, through contact point 132, through conducting member 141, through contact point 130, through conductor 142, through the winding 124, through conductor 143, through conductor 115, to the main line wire 90. The energization of winding 124 will attract the armature 123, pivoting the arm 144 so that the conducting member 121 will make contact with contact point 145. When this occurs, the coil 114 will be deenergized, while the coil 135 will be energized by current flowing from main line wire 90 through conductor 115, through conductor 116, through conductor 117, through winding 135, through conductor 146, through conductor 147, through contact point 145, through conducting member 121, through conducting member 122 to the other main line wire 92. The energization of winding 135 will move armature 134 upwardly. When this occurs, main line wire 90, theretofore connected to winding 94, will be connected to winding 93 through conductor 148, contact point 149, connecting strip 150, contact point 151, conductor 107, winding 108, and conductor 109. Similarly, main line wire 91 which had been connected to winding 93, will be disconnected from winding 93 and connected to winding 94 through conductor 152, contact point 153, conducting strip 154, contact point 155, conductor 156, and conductor 100. The reversal of the main line connections to coils 93 and 94 will reverse the direction of rotation of the rotating field of the induction motor, thus producing a reversal in the direction of the driving screw 15. The latching relay is of the type which takes positive energization of one of its actuating coils to operate it. In other words, it will remain in the position shown in the drawings until coil 124 is energized in the manner just described. It was moved to the position shown in the drawings by a previous energization of coil 157 acting through armature 158 and the pivoted arm 144.

It takes an appreciable interval of time for the rotating field to have effect, and ordinarily the inertia of the rotor is such that it will move the annular piston 24 upwardly a considerable distance before the direction of rotation is changed. The whisker 33, therefore, will remain grounded for a considerable period of time.

It will be noted, further, that when the circuit is broken between contact point 120 and the conducting member 121, that the coil 127 will be deenergized, thus permitting armature 129 to break the circuit between contact points 130 and 132, thus deenergizing coil 124. The switching action, however, has already taken place by this time and the latching relay is such that the conducting member 121 will be held in contact with contact point 145. Besides energizing the winding 135, the latching relay also completes the circuit from line wire 90 through conductor 115, through conductor 116, through conductor 125, through conductor 159, through winding 160, through conductor 161, through conductor 147, through contact point 145, through conducting member 121, through conductor 122, back to the other side of the line 92. The energization of winding 160 will raise armature 162. The raising of armature 162, however, is delayed by any suitable means to introduce a time delay as is well known in the time delay relay art. This delays the completion of the circuit between contact points 163 and 164 by the conducting strip 165 a sufficient length of time to enable the screw 15 to move the nut 22 downwardly a sufficient distance so that the whisker 33 is out of contact with the annular skirt of piston 24. After the circuit has been broken by the downward movement of the nut, a circuit is completed through contact points 163 and 164 so that, when whisker 39 contacts the annular piston 35 at the bottom of the stroke, current will flow fom main line wire 92 through conductor 110, through conductor 136, through conductor 166, through whisker 39, piston 35, through metal parts of pumping mechanism conductor 138, through conductor 168 to contact point 163, through conducting strip 165 to contact point 164, thence through conductor 169, through winding 157, through conductor 170, thence through conductor 143 and conductor 115 to the other side of the line 90. It will be seen that the whisker contacts alternately, grounding at the top and bottom of each stroke effects a reversal of the direction of rotation of the actuating screw 15.

If for any reason, due to the insulating action of the oil or disarrangement of the whisker contacts, a reversal should not take place, I have provided another means of reversing. It will be observed that the annular skirt 24 is a piston having small clearance with the annular cylinder 25. In the position of the parts shown in Figure 6, the annular piston 24 is shown a considerable distance within the annular cylinder 25. Oil in the cylinder 25 is displaced by the piston downwardly through the small clearance at the mouth of the annular cylinder. It will be seen that we have a species of hydraulic brake. The increased load introduced to the motor by the braking action, that is, by the work expended in forcing oil past the small clearance between the annular piston and the cylinder mouth, produces a temporary overload so that there is a surge of current through the winding 108 of the overload relay. When this occurs, the armature 171 is raised, carrying with it conducting strip 172, completing the circuit across contact points 173 and 174. When this occurs, a circuit is completed through one or the other of winding 127 or 157, depending on whether armature 129 is

raised or armature 162 is raised. In the position of parts shown in Figure 11, when the circuit is completed across contact points 173 and 174, current will flow from main line 92 through conductor 122, through conductor 175, through contact point 174, through conducting strip 172, through contact point 173, through conductor 176, through conductor 140, through contact point 132, through conducting strip 141, through contact point 130, through conductor 142, thence through winding 124, conductor 143, conductor 115, to the other side of the line 90. This energizes the winding 124 attracting the armature 123 and causing a reversal in the same manner as heretofore described.

It will be seen that I have provided two independent means of initiating the reversal of the motor. Normally, I prefer to use the contact whiskers since the surges of current through the windings produced by temporary overloads tend to overheat the stator, which is not desirable in a deep well pump. The surges, however, are only momentary and I provide an effective safety means for insuring a reversal of the motor in event the whisker contacts are not effective, through unforeseen circumstances.

It will be seen that I have accomplished the objects of my invention. I have provided a simple deep well pump of a reciprocating type and thus avoid the necessity of using long strings of sucker rods, thus saving time, labor, and expense. My construction is an improvement over the mechanical reversing means shown in my copending application, Serial No. 328,419, in that no mechanical parts are required at the bottom of the well. The relays for reversing the direction of rotation may be located on the surface and thus may be serviced from time to time without the necessity of pulling the pump. The whisker relays may be so designed that they will operate for long periods of time. The arrangement for producing artificial overloads at the top and bottom of the stroke insures, however, the reversal of direction of rotation of the motor, irrespective of whether the whisker relays become disarranged or not.

It will be understood that certain features and sub-combinations are of utility and may be employed without reference to other features and sub-combinations. This is contemplated by and is within the scope of my claims. It is further obvious that various changes may be made in details within the scope of my claims without departing from the spirit of my invention. It is, therefore, to be understood that my invention is not to be limited to the specific details shown and described.

Having thus described my invention, I claim:

1. A reciprocating drive mechanism including in combination a housing, an alternating current motor in said housing, a screw adapted to be driven by said motor, a nut threadedly mounted on said screw, coacting means on said housing and said nut for preventing rotation of said nut, reversing means for said motor, an actuating means for operating said reversing means, said actuating means including an annular cylinder within said housing adjacent the upper limit of the travel of said nut, an annular cylinder within said housing adjacent the lower limit of the travel of said nut, an annular piston carried by said nut thereabove, an annular piston supported by said nut therebelow, said upper annular piston adapted to enter said upper annular cylinder and create an overload on said motor thereby, said lower annular piston adapted to enter said lower annular cylinder and create an overload on said motor thereby, and an overload relay responsive to the respective overloads created at the upper and lower limits of the travel of said nut for initiating the action of said reversing means.

2. A reciprocating drive mechanism including in combination a housing, an alternating current motor in said housing, a screw adapted to be driven by said motor, a nut threadedly mounted on said screw, coacting means on said housing and said nut for preventing rotation of said nut, said motor comprising a three-phase induction motor having a rotating magnetic field, reversing means for said motor including a reversing switch for reversing the connections of two of said field windings with respect to each other whereby the direction of rotation of said magnetic field is reversed, a latching relay for operating said reversing switch, a time delay relay for operating said latching relay, and means responsive to the movement of said nut for operating said time delay relay.

3. A reciprocating drive mechanism including in combination a housing, an alternating current motor in said housing, a screw adapted to be driven by said motor, a nut threadedly mounted on said screw, coacting means on said housing and said nut for preventing rotation of said nut, said motor comprising a three-phase induction motor having a rotating magnetic field, reversing means for said motor including a reversing switch for reversing the connections of two of said field windings with respect to each other whereby the direction of rotation of said magnetic field is reversed, a latching relay for operating said reversing switch, a time delay relay for operating said latching relay, an overload relay, means within said housing for creating an overload at the upper and lower limits of the reciprocating motion of said nut whereby to actuate said overload relay, and means responsive to the actuation of said overload relay for initiating the operation of said time delay relays to operate said latching relay to energize said reversing switch to reverse the direction of rotation of said motor.

4. A reciprocating drive mechanism including in combination a housing, an alternating current motor in said housing, a screw adapted to be driven by said motor, a nut threadedly mounted on said screw, coacting means on said housing and said nut for preventing rotation of said nut, said motor comprising a three-phase induction motor having a rotating magnetic field, reversing means for said motor including a reversing switch for reversing the connections of two of said field windings with respect to each other whereby the direction of rotation of said magnetic field is reversed, a latching relay for operating said reversing switch, a time delay relay for operating said latching relay, an electrical contact within said housing adjacent the upper limit of motion of said nut, a contact point within said housing adjacent the lower limit of travel of said nut, means carried by said nut for grounding said contact points adjacent the upper and lower limits of travel of said nut, and means responsive to the grounding of said contact points for energizing said time delay relay to operate said latching relay to operate said reversing switch to reverse the direction of said motor.

5. A reciprocating drive mechanism including in combination a housing, an alternating current motor in said housing, a screw adapted to be

driven by said motor, a nut threadedly mounted on said screw, coacting means on said housing and said nut for preventing rotation of said nut, said motor comprising a three-phase induction motor having a rotating magnetic field, reversing means for said motor including a reversing switch for reversing the connections of two of said field windings with respect to each other whereby the direction of rotation of said magnetic field is reversed, a latching relay for operating said reversing switch, a time delay relay for operating said latching relay, an electrical contact within said housing adjacent the upper limit of motion of said nut, a contact point within said housing adjacent the lower limit of travel of said nut, means carried by said nut for grounding said contact points adjacent the upper and lower limits of travel of said nut, means responsive to the grounding of said contact points for energizing said time delay relay to operate said latching relay to operate said reversing switch to reverse the direction of rotation of said motor, and a hydraulic braking means within said housing adjacent the upper and lower limits of travel of said nut.

6. A reciprocating drive mechanism as in claim 5 in which said hydraulic braking means comprises an upper annular cylinder adapted to contain oil, a lower annular cylinder adapted to contain oil, respective upper and lower annular pistons carried by said nut, said pistons adapted to brake the movement of said nut by forcing the oil out of said respective annular cylinders.

7. A reciprocating drive mechanism including in combination a housing, an electrical motor in said housing, a screw adapted to be driven by said motor, a nut threadedly mounted on said screw, coacting means on said housing and said nut for preventing rotation of said nut, reversing means for said motor including a reversing switch, electromagnetic means for operating said reversing switch, a latching relay for operating said electromagnetic means, a relay for operating said latching relay, an overload relay for operating said last named relay, braking means within said housing for braking the travel of said nut adjacent its upper and lower limits of motion, said braking means adapted to create a motor overload at the upper and lower limits of travel of said nut, whereby to operate said overload relay to initiate the reversing of direction of rotation of said motor.

8. A reciprocating drive mechanism comprising a housing, an induction motor within the housing, reversing means for the motor, an electrical circuit for supplying current to the motor, a reciprocal means driven by said motor, means co-active with said reciprocal means at the ends of its stroke to overload said circuit, and means responsive to the respective overloads for actuating the said reversing means.

9. A reciprocating drive mechanism comprising a housing, an induction motor within the housing, reversing means for the motor, an electrical circuit for supplying current to the motor, a reciprocal means driven by said motor, means co-active with said reciprocal means at the ends of its stroke to overload said circuit, and an overload relay for actuating the said reversing means.

ARMAIS ARUTUNOFF.