United States Patent [19]

Dietz et al.

[11] **3,783,238**

[45] **Jan. 1, 1974**

[54] **ELECTRIC CURING OVEN**

[75] Inventors: **George C. Dietz,** Lancaster; **William G. Gross,** York, both of Pa.

[73] Assignee: **Armstrong Cork Company,** Lancaster, Pa.

[22] Filed: **Nov. 8, 1972**

[21] Appl. No.: **304,758**

[52] **U.S. Cl.** **219/395,** 13/22, 13/25, 219/357, 219/408, 219/410, 219/552

[51] **Int. Cl.** **F27d 11/02**

[58] **Field of Search** 13/22, 25; 219/354, 219/357, 395, 396, 398, 408, 410, 548, 552, 553

[56] **References Cited**

UNITED STATES PATENTS

2,809,223	10/1957	Stevenson	13/25
2,896,004	7/1959	Duffy et al.	13/22
2,764,664	9/1956	Stewart	219/410
2,767,298	10/1956	Fry	219/395
2,957,973	10/1960	Torrez	219/395 X
3,342,977	9/1967	Anderson	219/548
3,350,493	10/1967	Randall	13/22
3,525,850	8/1970	Hager, Jr.	219/357

Primary Examiner—Volodymyr Y. Mayewsky
Attorney—Clifford B. Price

[57] **ABSTRACT**

A curing oven is provided for the quick curing or drying of floor samples. The sample is held on a screen support within the oven, and high output, quick response electric radiant heaters mounted above and below the wire screen rapidly cure the sample.

1 Claim, 1 Drawing Figure

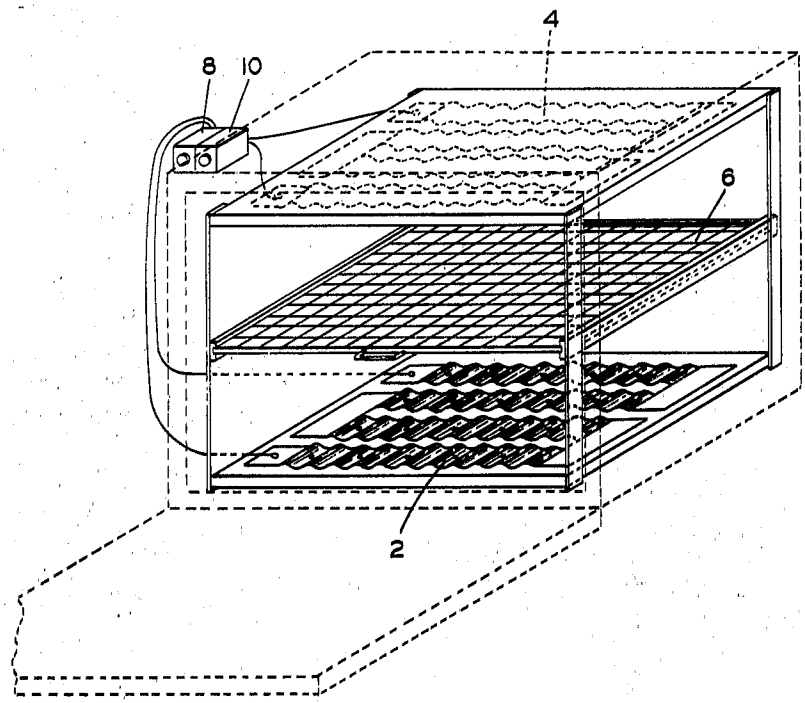

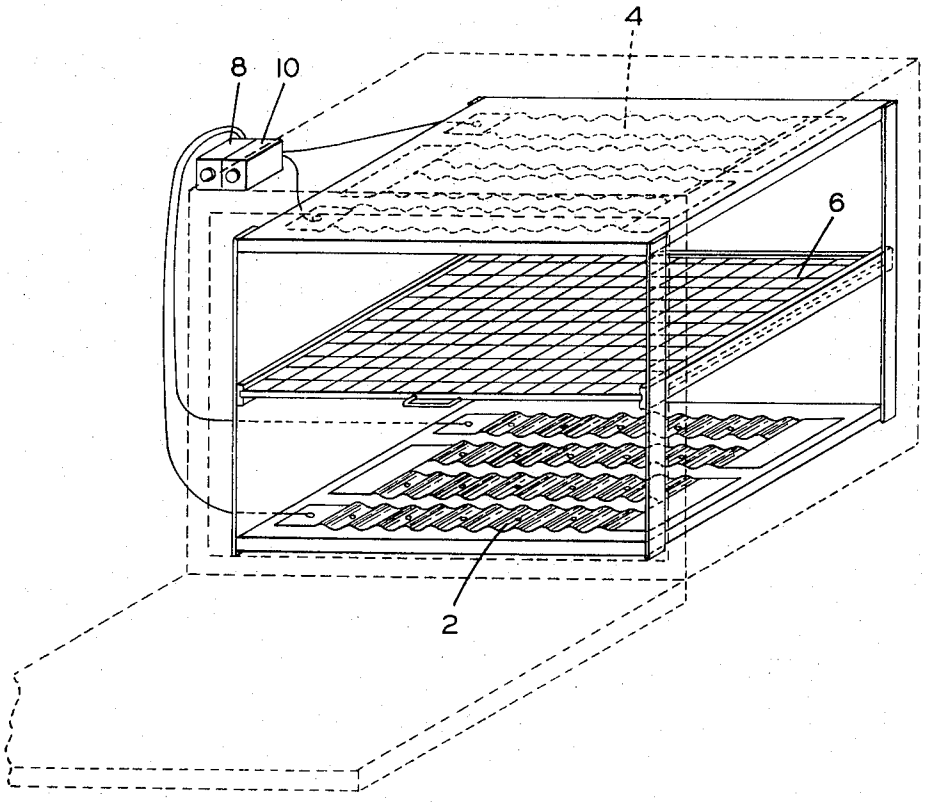
4
8
10
6
2

ELECTRIC CURING OVEN

BACKGROUND OF THE INVENTION

1. Field of the Invention

The invention is directed to a curing oven and, more particularly, to an oven for quickly curing or drying floor samples.

2. Description of the Prior Art

There are many oven structures on the open market. All commercially available ovens require a warm-up period to get an oven to its operating temperature. Also, most existing ovens have very little in the way of heat distribution and heat control.

Most oven structures must be brought up to a uniform temperature before they may be used. The opening of the doors of the oven for the insertion of a sample into the oven then results in a heat loss in the front part of the oven. This then can result in the sample being burned at the rear of the oven when attempting to get the sample at the front of the oven up to the proper curing temperature. This problem is particularly noticeable with small ovens where there is not a size such that will permit a rapid balancing of the heat within the front and back of an oven. Smaller ovens are not capable of being baffled to try to improve the temperature uniformity throughout the oven area. With conventional radiant heat ovens, there also exists the problem that the insertion of a sample of material into the heated oven results in the leading edge of the sample being subjected to heat for a longer period of time than the trailing edge and some resultant charring of the leading edge. Finally, ovens which heat from only one side are not capable of providing for a rapid curing of a sample.

There are many different types of heating elements available on the open market. The particular heating element used in the invention herein is that set forth in U. S. Pat. No. 3,525,850. That patent discloses a high output, quick response radiant heating element which has proven to be particularly adaptable for the invention herein.

SUMMARY OF THE INVENTION

The invention herein is a small oven structure for the quick curing of flooring samples. The oven has a radiant heater mounted on the ceiling and the bottom of the oven. A grate structure is positioned midway between the ceiling and bottom of the oven, and on the grate structure there is supported the sample to be cured. Individual controls are provided for each heater structure so that proper heat may be provided to both sides of a sample to secure rapid curing thereof.

The invention herein was developed after the problems of the prior art structures were discussed with several laboratory oven manufacturers, and no commercial oven was found which would offer a solution to the deficiencies of the prior art structures. The invention herein was made only after two manufacturers of laboratory ovens stated that they could not do anything to alleviate the problems encountered in the use of their ovens or to provide improved results in their ovens.

DESCRIPTION OF THE PREFERRED EMBODIMENT

The invention herein is directed to a small oven structure which is designed to take 18 × 18 inches samples of floor material. The oven is approximately two

feet square in its side-by-side, front-to-back dimensions and is normally not over one foot in height. The oven is provided with the conventional top, bottom, side and rear wall structures. A conventional door structure is provided on the front of the oven to provide access into the inside of the oven. These structures are generally shown in the dotted line configuration of the FIGURE of the drawing.

Mounted on the bottom wall of the oven is a high output, quick response radiant heater **2.** A second heater **4** is mounted on the inside of the ceiling of the oven. The two heaters **2** and **4** are formed from the ribbon structure and insulating block of U. S. Pat. No. 3,525,850. A plurality of the ribbon structures are mounted on a single insulating block, and this covers the full interior of the bottom and ceiling of the oven structure of the drawing. Midway between the two heating elements, there is placed a stainless steel grate structure **6.** The grate structure is made of a light gauge stainless steel wire which has a very open mesh weave. The wire grate is used to support the flooring sample during the curing operation within the oven. Conventional temperature control units **8** and **10** are individually connected to each of the heating elements **2** and **4** so that the heat output of each heating element **2** and **4** may be individually controlled.

The floor sample is placed on the wire grate with the oven in a cold state. The heaters are turned on and the high output, quick response radiant heaters reach their desired temperature in a few seconds, and thus eliminate the long warm-up period which is normally required with the conventional ovens. Also since the heaters rapidly cool down, the cooling of the oven can occur in a very short period of time. Since a sample is inserted into a cooled heating area, and heat applied, the sample will be uniformly heated. This will then result in an even cure of the sample. This is due to the fact that there is an elimination of the hot area in the back of the oven and the cool area in the front of the oven due to the opening of the oven door to place the sample therein. Naturally, a wire grate structure must be utilized so that heat may be transferred from the lower heater up to the back of the sample being cured. Heat is applied to both the top and bottom of the sample being cured and can be closely and independently controlled by the appropriate control structure. High temperatures may be used in the initial heating operation and then reduced when the cure process is close to completion.

Since the curing operation may involve the drying of printing inks and chemicals, there may be the generation of objectionable fumes. A simple vent structure could be used to cover the total unit or to exhaust fumes from a portion of the heating chamber. Also, the support grate for the sample could be made adjustable to move the sample closer to or farther from either one of the heaters **2** and **4.**

What is claimed is:

1. A small size oven for the curing of 18 × 18 inches samples of material wherein the oven is provided with conventional insulated side, top, bottom and rear walls, an insulated door is provided for the front of the oven, and within the oven there is placed an open mesh wire grate to support the sample for heating, the improvement comprising only two individually controlled heaters placed on only the bottom and ceiling walls of the heating chamber, said heaters being high intensity,

quick response, electrical resistant, foil radiant heaters having a heating element in the form of a transversely corrugated metallic foil ribbon adapted to be heated by the passage of electricity therethrough to a temperature up to 1,800° F., said ribbon of each heater being mounted on a thermal insulating backing which is separate from the structure forming the oven walls, said open mesh wire grate being adjustably mounted within the oven so as to be adjustable to move the samples closer to or father from either one of the two individual electric heaters of the oven, and a venting structure to vent from the oven fumes formed during a heating operation by the oven.

* * * * *