April 10, 1934. J. KIEFFER 1,954,321

X-RAY DEVICE AND METHOD OF TECHNIQUE

Filed March 13, 1929 2 Sheets-Sheet 1

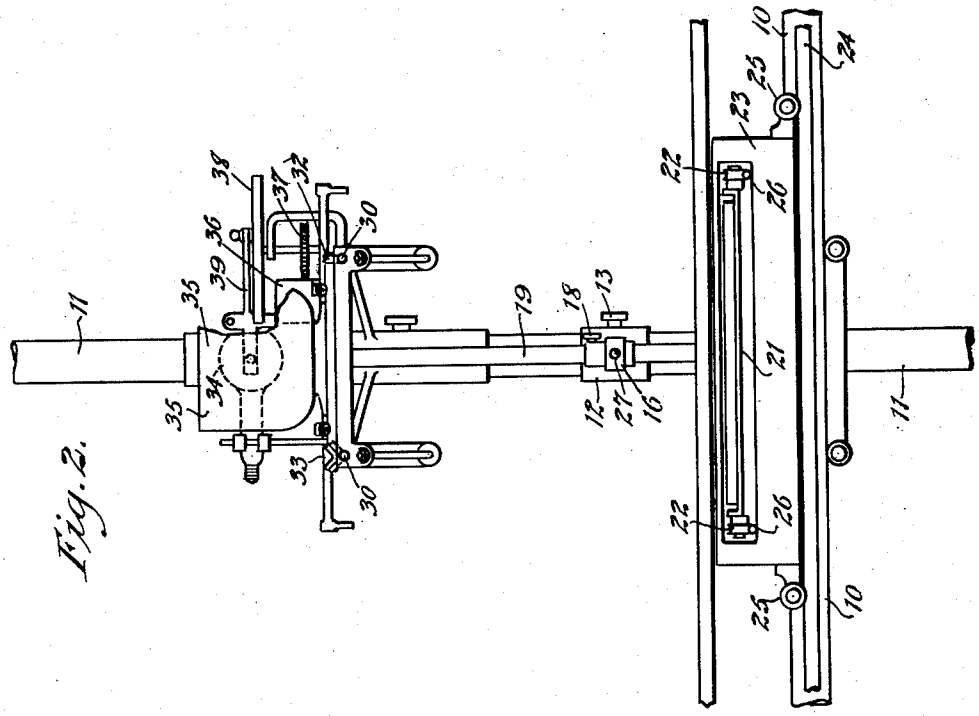

Fig. 2.

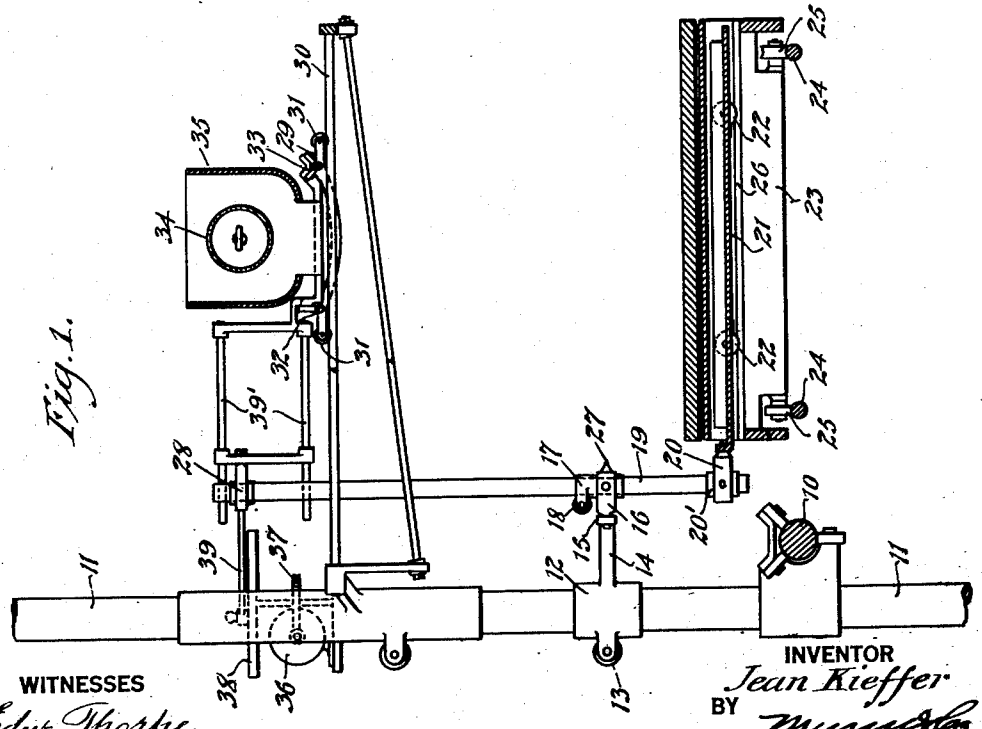

Fig. 1.

WITNESSES

Edw. Thorpe

A. F. Sperry

INVENTOR

Jean Kieffer

BY Munn & Co.

ATTORNEY

April 10, 1934. J. KIEFFER 1,954,321

X-RAY DEVICE AND METHOD OF TECHNIQUE

Filed March 13, 1929 2 Sheets-Sheet 2

Fig. 4.

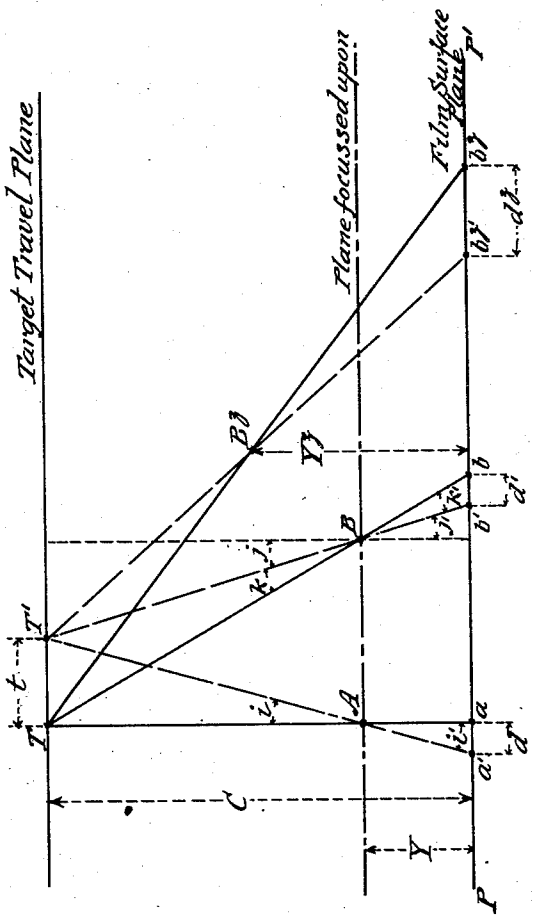

Fig. 3.

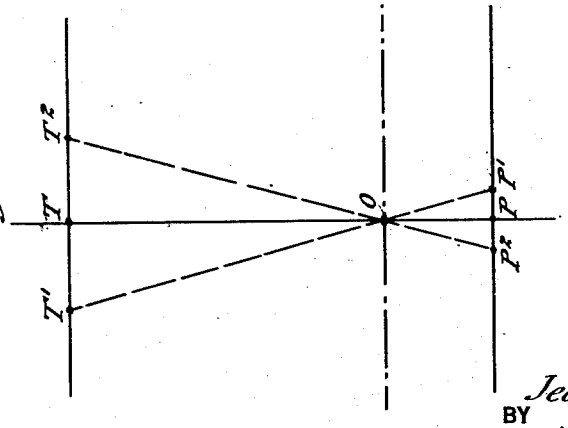

WITNESSES
Edw. Thorpe
A. T. Spenny

INVENTOR
Jean Kieffer
BY
Munn & Co.
ATTORNEY

UNITED STATES PATENT OFFICE

1,954,321

X-RAY DEVICE AND METHOD OF TECHNIQUE

Jean Kieffer, Norwich, Conn.

Application March 13, 1929, Serial No. 346,651

4 Claims. (Cl. 250—34)

This invention relates to X-ray devices and methods of technique.

The prime object is to provide an apparatus for, and method of effecting the virtual focusing of X-rays.

A further object of the present invention is to provide means for controlling the movement of an X-ray tube with respect to a body.

With the present apparatus and method the inherent advantages of a lens system for light rays are accomplished for X-rays through controlled movement of the X-ray tube with respect to a body or with the X-ray tube with respect to a body and plate.

By the use of the present method for X-ray treatment it will be found that the X-ray effects may be accumulated at a given point in a body with a marked lessening of the injurious cumulative effects on the surface or in other parts of the body.

Another object of the present invention is to provide an X-ray apparatus including tube and plate supports, by the use of which an X-ray photograph accentuating a specific object in a field may be obtained.

A further object is to provide a new method of X-ray photography technique by which improved radiographs may be secured.

Notwithstanding the highly developed roentgenological techniques in use at the present time, there are occasions when even the best of modern methods do not seem to be conducive to results which will give the diagnostician all the information required. This is especially exemplified by the frequency with which the term "superimposed shadows" is heard when radiologists discuss the interpretation of X-ray films.

With the advent of the stereoscopic technique, this superimposition of shadows has been eliminated to a large extent and the diagnostic value of radiographs greatly increased. However, when bodily parts comprising a multitude of overlying shadow-producing components are radiographed, only the best of stereoscopic techniques combined with an eye and mind well trained in the interpretation of such films will yield results of real diagnostic value, and even these will at times not prove sufficiently adequate.

A radiographic technique which would further diminish the difficulties of interpretation due to the superimposition of shadows should therefore prove of real value, especially in some phases of chest or head radiography where superimposition of shadows is usually very troublesome and often leads to erroneous interpretations. For example, the interpretation of a set of stereoscopic films of a lateral view of the chest is very difficult, and, unless the pathology is very marked, often impossible. Although large cavities, pneumothoraces, effusions, consolidations, or large calcified masses are easily seen and localized by such technique, the visualization of small changes such as those occurring in the hilum or the mediastinum is a very difficult matter. In head work superimposition of shadows is also very troublesome and the usual means used to minimize it often results in distortion, which further complicates interpretation.

From a consideration of the present specification it will be seen that the advantageous features of the invention may have multifold practical uses in the industries, as well as in the medical field. It will be understood that the invention is not confined to medical use, and that the terminology herein used which implies medical use is not intended to restrict in any way the application of the invention to medicine. For example, in the examination of parts composed of superimposed metal inserts or the like, the focusing effect herein provided for will find considerable usefulness.

The problem solved by the present invention is to provide means for obtaining a clear view of deeply seated parts uncomplicated by an excess of foreign shadows and without appreciable distortion.

Various other objects and features of the present invention and the general advantages of the apparatus and method set forth will be apparent from a consideration of the following specification, taken in connection with the accompanying drawings, in which—

Figure 1 is an elevational view partly in section, showing the apparatus of the present invention in side view;

Figure 2 is an end elevation of that form of the apparatus shown in Figure 1;

Figure 3 is a diagrammatic illustration showing the principles of operation of the present apparatus and technique;

Figure 4 is a diagrammatic illustration more clearly disclosing the principles of the present apparatus and technique.

Referring more particularly to Figures 1 and 2 of the drawings, one embodiment of the apparatus forming part of the present invention and adapted for carrying out the technique of the present invention is illustrated.

From the illustration of the apparatus it will be understood that the structure is preferably ar-

ranged in conjunction with a conventional X-ray table, the side rail of which is indicated at 10 in the drawings, and preferably longitudinally adjustable upon the rail 10 a vertical standard 11 is provided. In the drawings the standard 11 and the rail 10 have been shown round, the standard being of tubular construction to allow of having counterweight sliding inside it and balancing of the weight of the tube carried, its supports and the actuating mechanism. It is understood that the specific construction of these and other parts of the invention as herein illustrated may be departed from without departing from the spirit of the invention. It will be further understood that the structure herein illustrated is substantially diagrammatic in its illustration, and that in the commercial manufacture of the apparatus of the invention the full use of equivalents may be resorted to.

Associated with the standard 11 and vertically slidable thereon for adjustable positioning, a sleeve 12 is provided which is preferably of split construction, the ends being joined through an adjusting nut 13, whereby the vertical position of the sleeve upon the standard 11 may be secured against accidental displacement. The sleeve 12 includes an inwardly extending arm 14 which terminates in an angularly disposed end 15, which lies parallel with the rail 10 of the table, and to which a U-shaped bracket 16 is pivotally mounted. The ends of the bracket 16 are adapted to engage an adjustable sleeve 17 which, similar to the structure of the sleeve 12, is provided with an adjusting screw 18. Through the sleeve 17 a vertical shaft 19 may slide for adjustment and is adjustably secured thereto by means of the screw 18. It will be understood that the adjustable pivoting of the shaft 19 may assume any desired structural arrangement in which means are provided for pivotally mounting the shaft 19 for vertical adjustment of its pivotal point with respect to the rail 10.

The lower end of the shaft 19 can slide through sleeve 20' pivotally mounted upon a connecting member 20 secured on a movable X-ray plate support 21. The support 21 is transversely movable upon rollers 22, which in turn are supported by a carriage 23 longitudinally movable upon tracks 24 fixedly secured with the rail 10. It will be seen that carriage 23 is provided with suitable rollers 25 which engage the tracks 24, and that the wheels 22 roll upon tracks 26 mounted upon the carriage 23. It will be understood that this carriage may be adapted to have incorporated with it a Bucky diaphragm and actuating mechanism or its equivalent.

In considering the plate support 21, it will be seen that the associated structure is such that transverse or lateral movement of the support of any combinations of such movements may be had by the support in response to movement of the shaft 19. It will further be seen that owing to the sliding pivotal arrangement at 20, which preferably includes a U-shaped bracket or gimbaling arrangement, as shown at 16, the support 21 retains a fixed plane for its movement, which plane is at all times parallel with the plane in which the shaft 19 is pivoted, the plane being suitably indicated by a pointer 27 associated with the sleeve 17.

The upper end of the shaft 19 is associated by a sleeve and gimbaling or pivotal connection 28 with a laterally and transversely movable tube support generally indicated at 29. The support 29 is supported upon a rigid supporting structure 30, which is associated with the standard 11. It will be understood that by the provision of suitable rollers 31 and 32, together with a track 33, the longitudinal and transverse movement of the support 29 may be had, the movement being similar to the movements obtained by the structure associated with the support 21. An X-ray tube, as indicated at 34, is carried by the support 29 and suitably shielded in the usual manner by a shield 35. It will be readily seen that pivotal movement of the shaft 19 will effect corresponding transverse or longitudinal movement of the tube support of the shield 35 and the tube.

For movement of the shaft 19 about its pivot point, a suitable motor 36 may be provided, which by means of a gear 37 rotates a disk 38 upon which a shaft 39 is eccentrically mounted, and which has its other end rigidly secured by means of an adjustable member 39' to the tube support 29. It will be clearly understood that rotation by the motor 36 may thus be imparted to the wheel or disk 38, and by suitable positioning of the eccentric point the shaft 39 may be arranged to suitably move the shaft 19 about its pivot.

It will be understood that the specific motive power for the shaft 19 herein illustrated may be departed from, and that the illustration of the mechanism herein disclosed provides only for one general type of motion. It will be understood that the shaft 19 may be manually moved about its pivot and that suitable mechanism may be associated in place of the motor 36 and wheel 38 for imparting any predetermined type of motion to the upper end of the shaft 19. It will be understood that this mechanism may be positioned at any place upon rigid supporting structure 30 or in conjunction with the support 11.

From the foregoing consideration of the apparatus herein presented it will be seen that a plate positioned on the support 21 will record in the usual manner of X-ray photography. It will further be seen that when the tube 34 is energized and a plate carried by the support 21, the distance between the tube and the plate will not be varied through movement of the tube in response to movement of the shaft 19. It will be further seen that the focusing of the tube and plate with respect to all points in a plane parallel to the plane of motion of the tube and plate, including the given point at which the shaft 19 is pivoted, will not be varied in response to movements of the shaft 19, but that all points between the tube and plate not lying within the plane at which the shaft 19 is pivoted will change their focus with respect to the tube and plate as the tube and plate are co-ordinately moved by movement of the shaft 19. As will be hereinafter disclosed, this feature of the apparatus provides a structure admirably adapted to carry out the novel technique which forms part of this invention and which is hereinafter disclosed in conjunction with Figures 3 and 4 of the drawings.

Principle of system

The technique essentially consists of a method whereby any desired plane in the body to be examined is rendered sharply on the plate, all other planes being more-or-less blurred, and whereby in some cases some of the overlying or underlying parts are rendered practically invisible.

Its results are very similar to those produced by the focusing action of a lens, a plane being brought in sharp focus and the foreground and background being more or less blurred, eliminat-

ing distracting outlines. In fact, it can be shown mathematically that this method achieves a result essentially similar to the focusing of the rays radiated from the target of an X-ray tube after they have traversed a partially transparent body. Due to the well-known fact that X-rays are not refracted or reflected by ordinary lenses or mirrors, this focusing of X-rays seems at first impossible; however, the mechanical system to be described accomplishes an effect similar to this focusing and follows the laws of lenses and concave mirrors. This is accomplished by giving a motion to the tube and to the film or plate. This motion is controlled by a linkage between the tube and plate, working in such a way that the film moves at all times in a direction reciprocal to that of the target and that the extent of their motion is proportional to the relative distance of target and film to the plane which is to be clearly seen.

This link, for the sake of clearness, can be represented as a straight rod T—O—P (Fig. 3) pivoted at O, and capable of turning around points T and P, not only to right or left, but also forward and backward. (This is accomplished by a pivot system similar to gimbals.) At O is another pivot which can slide along rod TP and which can be set at any point, the height of this setting determining the height of the plane which will be in focus. Once set O is immovable in relation with the part to be radiographed; it becomes the center of the linkage system controlling the motions of tube and film, the motion of which is controlled in such a way that they can move only in planes parallel to one another and to the plane of the film.

It can readily be seen from this diagram that when T moves to the right, P moves to the left, and that the amplitude of their motions is proportional to the distances TO and OP. It can also readily be seen that were point T at the exact center of the target, and point O at the center of a point on the plane which it is desired to render sharply, the shadow of this point would fall at P and follow P for any movement described by T. Therefore, there would be no relative motion of the shadow of the point at O upon a film placed at P and moving with it. But it is not essential that T, O and P be so situated. It will be seen later that as long as T is on a plane which includes the center of the target, and P on a plane which includes the entire surface of the film, and as long as the target and the film move in planes parallel to one another and parallel to the surface of the film, this relation will hold for any point situated on a plane in which O is situated and parallel also to the film surface. Therefore all points on a plane at O will throw a shadow which will have no relative motion in regard to the film and will be sharply rendered. It will also be shown that the shadows of all points situated any other plane will have a motion relative to the film and will appear blurred, this consequent blurring being greater as they are further removed from plane O, this degress of blurring being also dependent on the amplitude of the target travel and being increased when this travel is increased.

But so far we have only taken into consideration a unidirectional motion of the target along a line situated in a plane parallel to the film, and the blurring would also be unidirectional, points giving line shadows, these being parallel to the travel of the target. If a circular movement of translation be given to the target, the relations still hold and the blurring will be circular. Any target motion can be used, provided that this motion is at all times parallel to the film surface.

We then have a system which will greatly diminish or completely remove the obstacle that superimposition of shadows present to the interpretation of certain X-ray films.

Mathematical considerations

Fig. 4 presents the principle of the system in a schematic way. In this figure, T and T' represent two positions of the target upon a plane (target travel plane) parallel to plane PP' (film surface plane). A and B represent two points upon a plane parallel to PP' and which are points of the object in focus. C represents the target-plate-distance and Y the distance from the focused plane AB to film surface. The shadows of points A and B will be at points a and b respectively when target is at T, and at a' and b' when target is at T'. The distance d between a and a' and d' between b and b' will be proportional to the distance t that the target has moved and to the distance from the target to the plane AB and from plane AB to plane PP'. So that if a film placed on plane PP' is moved with point a, the shadow of point A will be stationary on the film. As the distance b to b' is equal to the distance a to a', shadow of point B will also be stationary, and similarly the shadows of all points on plane AB will be stationary on the film. And it is evident from the diagram that a system of linkage such as that described previously will move the film in a way exactly equal to the motion of the shadow of point A.

For a point Bz, outside of plane AB, the ratio of the distance between the plane TT' and Bz and the plane PP' is not the same as for point on plane AB and the displacement of the shadow of point Bz on plane PP' will be of a different value than shadow of point A and therefore it will not always fall on the same place on a film moving with the shadow of point A.

By putting the foregoing explanation in algebraic form they, and other peculiarities of the system may be better explained.

Referring to Fig. 4, we find:

Travel of target $=t$
Travel of shadow of point A$=d$
Distance of target to film$=C$
Distance of point to film$=Y$

Therefore distance of A to T$=C-Y$
and

$$\frac{t}{d}=\frac{C-Y}{Y} \text{ or } d=\frac{Yt}{C-Y}$$

and as all triangles having TT' for base and any point on AB for apex will have $C-Y$ for height and all triangles having their apex at any point on AB and their base on PP' will have Y for height, this value of

$$d=\frac{Yt}{C-Y}$$

will hold for any value of t and for any point on plane AB.

This is readily proved: Referring to Fig. 4, line T to a is perpendicular to plate TT' and PP' and equal to C, we find:

$$\frac{t}{d}=\frac{(C-Y)\text{ tang. } i,}{(Y)\text{ tang. } i'} \text{ and as } i=i', \frac{t}{d}=\frac{(C-Y)}{Y} \text{ and } d=\frac{Yt}{C-Y}$$

At any other point on plane AB, for example for point B, we find:

$$\frac{t}{d'}=\frac{(C-Y)\ (\text{tang. }(j+k)-\text{tang. }j)}{(Y)\ \text{tang. }(j'+k')-\text{tang. }j')}$$

and as

$$k=k' \text{ and } j=j', \frac{t}{d'}=\frac{C-Y}{Y} \text{ and } d'=\frac{Yt}{C-Y} \text{ and } d'=d$$

And similarly for the linkage system. As long as the upper gimbals have their common center on plane TT′ and the lower gimbals have their common center on plane PP′, as long as the gimbals on pivot point O have their common center on plane AB, the relation will always be

$$d=\frac{Yt}{C-Y}.$$

(It is to be understood that the attachment points of the linkage are immovable in relation to T, O and P; that is, that the motion of the linkage at its points of attachment to each plane moves with a motion always parallel and equal to the motion of T for the target plane, of P for the film plane, O being similarly fixed relative to the unmoving object.) So we see that the formula

$$d=\frac{Yt}{C-Y}$$

can be used to express any displacement of a to a' for any displacement of T to T′ and that, as the film is always moving with a displacement equal to d the shadow of all points on plane AB will be stationary in relation to the film no matter the speed of translation of T or its direction.

It is to be remarked here that though the distances between planes TT′, AB and PP′ are always constant the distances between points T, O and P vary, necessitating sliding of link rod at points T and P, to compensate for these changes of length, or at points T and O if the rod be fixed at P or at points O and P if the rod be fixed at T.

The displacement dz of the shadow points on any other plane than AB will not be equal to d. Taking for example, point Bz nearer to T than is plane AB, and expressing its distance to PP′ as Yz, we have

$$dz=\frac{Yzt}{C-Yz}$$

but $Yz>Y$, therefore

$$\frac{Yzt}{C-Yz}>\frac{Yt}{C-Y} \text{ and } dz>d$$

and for any point Bz', between AB and PP′ we have:

$$dz'=\frac{Yz't}{C-Yz'}$$

But $Yz'<Y$ and $dz'<d$

If point Bz is on plane TT′ we get:

$$Yz=C \text{ and } dz=\frac{Ct}{C-C}, \text{ but as } \frac{Ct}{C-C}=\infty,\ dz=\infty$$

And when point Bz' is on plane PP′:

$$Yz'=O \text{ and } dz'=\frac{Ot}{C-O} \text{ or } dz'=O$$

We therefore find that the shadows of all points not on plane AB will have a displacement greater or smaller than d, and as the displacement of the film is equal to d, they will all have a displacement relative to the film, this displacement being relatively greater for points above than for points below AB and that this displacement tends toward infinity (or $d+\infty$) as the points approach the target plane and tends to approach the value of d (or $d-$O) as the points approach the film plane. And as this displacement causes blurring of the shadows of these points on the film, only points on the plane for which the pivot O is set (plane AB, or object plane) will have a sharp outline, all other points being blurred, this blurring being greater as the points are further removed from the object plane and relatively greater for points between this plane and the target travel plane than for points between the object plane and the surface of the film. This blurring we also find to increase directly as the amplitude of the target travel.

To sum up all this, we can say: that with the system of linkage used between the tube and the film, when the target is moved during exposure in any direction whatever along a plane parallel with the film surface it will impart to the film a motion inverse and proportional to its travel; that the result of this will be that all objects situated on a plane including the point of pivotage of the system will have a clear outline on the film, all other objects being more or less blurred; that the amount of this blurring depends on the distance of these objects to the plane in clear focus and on the amplitude of the target travel; and that the quality of this blurring depends on the path followed by the target.

From the above it will readily be seen that the technique of the present invention includes the linking of the X-ray target to the film by a pivoted arm, the axis of pivotage of which is in a plane parallel to the film and containing the object to be photographed. The target and plate are thus moved simultaneously and diametrically opposite but the planes in which they move retain their predetermined distance with respect to the particular portion of the object which is to be more clearly represented on the film.

Similar results could also be obtained with a similar linkage system by moving the target and object, the plate remaining stationary; or the plate and object, the target remaining stationary. The machine designed could be easily modified to do this, should it be advantageous to do so in certain cases. The principles involved are the same and the formulæ for these systems similar to those for the system above described.

It is to be understood that the appended claims are not limited to the use of X-rays alone, but that when the term X-rays is used it is to be construed as meaning any radiation capable of penetrating and passing through a substance, being therein absorbed in different degrees and capable of forming an image either latent, virtual or real, either directly or indirectly, upon a suitable sensitive base. When the term "film" or the term "plate" is used, it is to be construed as meaning such a suitable sensitive base with its attendant accessories (such as fluorescent or intensifying screen, or the like with their support) necessary for the direct or indirect recording of a latent, virtual or real image upon such a sensitive base; or the direct or indirect visualization of such a real or virtual image with the aid of suitable materials.

What is claimed is:

1. A photographic apparatus comprising a rigid support, an X-ray tube carriage movable on said support, an X-ray tube holder movable on said carriage, a motor mounted on said support,

a plate carriage, a plate holder movable on said plate carriage, a vertical shaft having its upper end connected to said tube holder and its lower end connected to said plate holder, pivot means intermediate the ends of said shaft and means connecting said shaft with said motor to actuate said shaft about its pivot and simultaneously move said holders and carriages through independent paths.

2. A photographic apparatus comprising an upper track and a lower track, a carriage movable on said upper track, an X-ray tube holder movable on said carriage, a carriage movable on said lower track, a plate holder movable on said carriage, means for causing a movement of said carriages in one direction, said means operating to move said holders in another direction.

3. A photographic apparatus comprising an upper track and a lower track, a carriage movable on said upper track, an X-ray tube holder movable on said carriage, a carriage movable on said lower track, a plate holder movable on said carriage, a vertical shaft having its upper end pivotally connected with said tube holder and its lower end pivotally connected with said plate holder and means for actuating said shaft to cause a movement of said holders.

4. A photographic apparatus comprising an upper track and a lower track, a carriage movable on said upper track, an X-ray tube holder movable on said carriage, a carriage movable on said lower track, a plate holder movable on said carriage, a vertical shaft having its upper end pivotally connected with said tube holder and its lower end pivotally connected with said plate holder and means for actuating said shaft to cause a movement of said holders, said shaft operating to cause said carriages to move relative to said holders.

JEAN KIEFFER.