Sept. 19, 1939. H. W. ALEXANDER 2,173,325

SURGICAL OPERATING LUMINAIRE

Filed Feb. 24, 1936 2 Sheets-Sheet 1

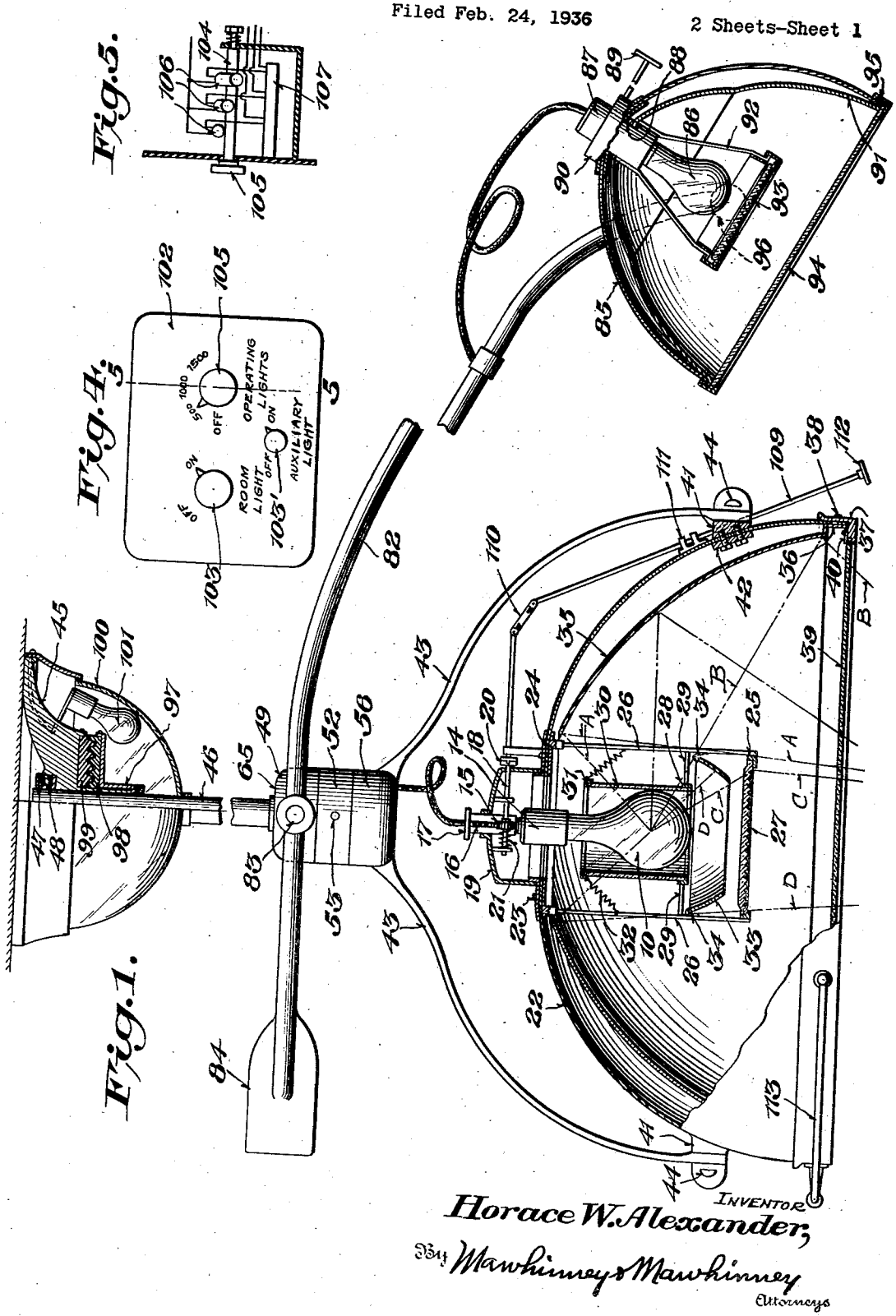

Fig. 5.

Fig. 4.

Fig. 1.

Horace W. Alexander,
INVENTOR

By Mawhinney & Mawhinney
Attorneys

Sept. 19, 1939. H. W. ALEXANDER 2,173,325

SURGICAL OPERATING LUMINAIRE

Filed Feb. 24, 1936 2 Sheets-Sheet 2

Fig. 2.

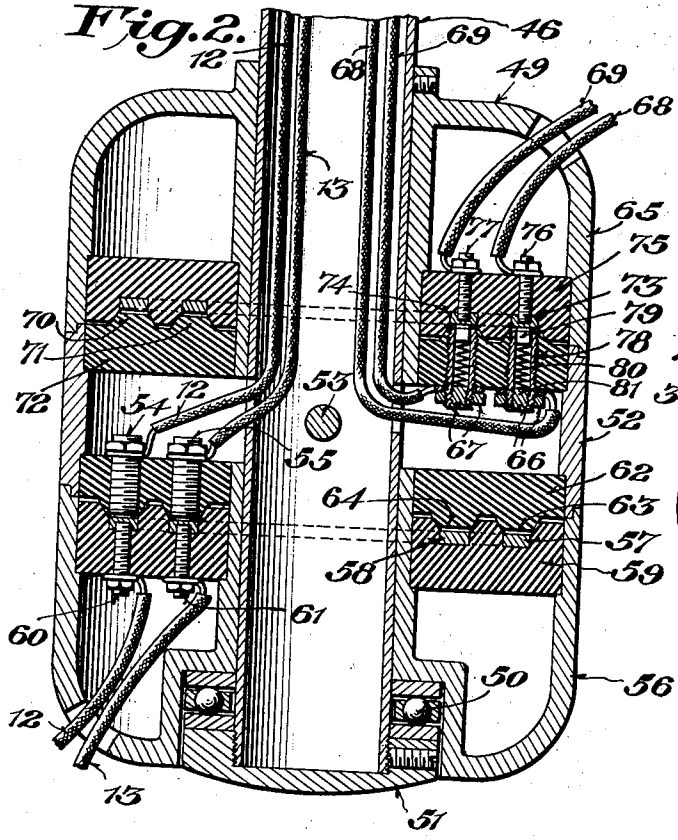

Fig. 3.

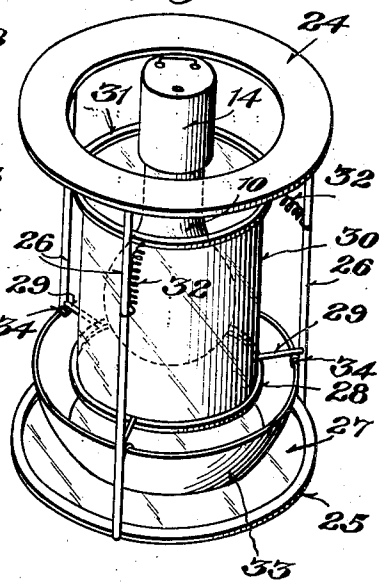

Fig. 6.

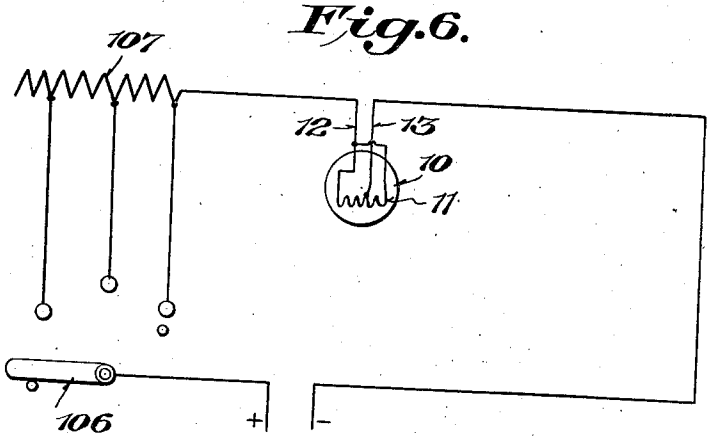

Inventor

Horace W. Alexander,

By Mawhinney & Mawhinney

Attorneys

Patented Sept. 19, 1939 2,173,325

UNITED STATES PATENT OFFICE

2,173,325

SURGICAL OPERATING LUMINAIRE

Horace W. Alexander, Erie, Pa., assignor to American Sterilizer Company, Erie, Pa., a corporation of Pennsylvania

Application February 24, 1936, Serial No. 65,477

7 Claims. (Cl. 240—1.4)

This invention relates to illumination, and particularly to an improvement in surgical operating lamps.

The primary object of this invention is to provide a new and practical device embodying the necessary requisites to facilitate and accommodate the visual requirements for surgery with an artificial illuminating source.

Another object of the invention is to provide a lamp possessing the combined characteristics of heat control, shadow reduction, focusable beam control, variable beam intensity, adjustability for angular projection to coincide with any angle of vision desired, and of color discriminating quality approximating daylight that important details may readily be distinguishable.

This invention relates to lamps of the projector type in which the lamp bulb is carried in the most advantageous position within its reflectors and optical system, namely; with its axis co-incident with the axis of the reflector and optical system, or nearly so, to thus eliminate the maximum destruction of the reflecting surface by the bulb, base and socket; permitting the maximum energy flux to be utilized and reflected into a cross beam on the surgical field. The above described beam being intercepted by a secondary reflector placed horizontal to the axis of the primary reflector and located directly below the lamp bulb intercepting direct light emanations of the light flux, for example 36° from the axis through an arc of 25.4° inclusive. This use and positioning of the secondary reflector trapse and reduces the emanations back through the lamp bulb for redirection by the primary reflector into the surgical beam. The secondary reflector has an opening directly at the bottom permitting, for example, 72° of the lamp emanations to pass directly through the axis of said optical system impinging on or striking a circular prismatic control lens, thereby refracting the emanations from the lamp bulb into a vertical shaft of light with maximum intensity within the surgical field providing for deep cavity penetration.

The above described reflected ray course controls the emanations from the lamp bulb into a horizontal plane through an arc of from 60° below horizontal to 135° above horizontal, the emanations passing through a clear cylinder of blue-green or glue glass hereinafter referred to as a primary heat filter, which absorbs or filters from the emanating flux of the lamp bulb the maximum infra-red rays of the lamp and by reason of its color, produces a light of daylight quality with high colors discriminating properties.

Another object of the invention is to provide cold light. In simple language cold light implies an illuminant which radiates the major portion of its energy in the visible range. Others have claimed cold light and heat control by ventilation or other mechanical means disregarding the range of radiations of wave lengths and the necessary control of present day illuminants or lamp bulbs. Having previously described my optical system and primary control of the infra-red rays at the source, I have incorporated a secondary filter within the door of said lamp body thus filtering the combined source emitted from the complete optical assembly, thereby controlling the emanations of the infra-red and heat producing rays entirely omitting all radiant or reflected heat from the surgical field and area.

The important mechanical and electrical features of said lamp are as follows: The aforementioned optical system is contained in a semi-spherical housing enclosed and maintained by a permanent door containing a combination heat and color filtering lens hereinafter to be termed a secondary filter. Access to the lamp housing is provided for by a removable cap in which is supported the lamp socket and focusing device being removable for lamp replacing through the top opening of said housing. By the provision of a simple clutch, disconnecting of the focal adjustment is provided for, assuring accessibility with ease.

The complete housing and assembly is suspended at a point of balance within a forked type yoke providing for angular adjustment within the vertical range. The yoke being part of a freely revolving commutating ring connection permitting a complete circular adjustment in the horizontal.

General room illumination is provided by a new and novel principle in surgical lamp design, namely; by incorporating at the ceiling line a diffusing or refracting globe, through which the supporting stem or tubing is passed freely permitting rotation of said support. Within said diffusing globe any desirable number of incandescent lamps are contained for uniformly illuminating said globe. The globe shall be maintained by a metal canopy support attached to and from a substantial ceiling mounting support of the lamp. Said support shall contain sufficient bearing length for rigidity in supporting the revolving stem of said lamp, plus other necessary mechanical features for maintaining electrical contact. Electrical contact through the entire lamp supports, namely, the ceiling suspension and yoke

support of lamp body is maintained and permanently insured to permit complete revolution of said lamp, by the use of connecting rings of novel design guarding against possible arcing by the principle as outlined in the following. I use bronze rings which are recessed deeply within an insulating disc of proper circumference termed hereafter as a female connection. A second insulating disc hereinafter termed as the male connection, has annular tapered bosses freely engaging within the female groove and carrying at two points spring tension contacts of sufficient pressure to assure permanent contact at all times and safely guard against arcing or sparking.

Dual protection is assured first, by enclosing the contacts well within said female groove which acts as an arc quencher, secondly by sufficient spring tension of contacts against connecting rings guarding against possible disruption of said contacts.

Protection against a complete lamp failure is provided for by the use of a lamp bulb containing two separate and distinct filaments a new and novel means of burning both filaments in unison by inserting a jumper wire across the lamp socket. Although this represents a simple process it is of vital importance from an emergency standpoint against complete illumination failure. It is to be noted that both filaments burning within the same lamp envelope are located at the axis or focal point of the optical system. Thus in event of failure of one filament the standby filament will of course be at the proper point of focus assuring full control in the surgical field of illumination. One of the most important features in the new era of illumination devices for fine detail, such as surgery, is the proper quantity and intensity required for the individual surgeon's eyes. In other and plainer words the seeing value of one pair of eyes may require an exceptionally strong field of illumination while another pair of eyes may be impaired by apparently a too intense quantity of light.

Therefore I have introduced a unique method of controlling the illumination intensity range as an important part of the surgical lamp development. This control is mounted at a distance from the operating area so that the unsterile attendants may regulate the surgical field to the personal satisfaction of the operating surgeon. Said control shall consist of either a fixed or variable rheostatic control, having two or more range steps if fixed, and is set for a minimum intensity of 500 foot candles. If fixed control is desirable all variable regulations shall be made and maintained by mercury contact tubes.

Mounted on an arm pivotally connected to an auxiliary connector ring is an adjustable auxiliary lamp which, in its optical structure, is identical with the large optical system as used in the primary housing previously described, and which is free to revolve with desired clearance about the main lamp housing. The purpose of this secondary or auxiliary lamp is to reach, angularly, points below a definite operating surface or table to facilitate the surgeon's seeing value in critical angular cavities. The above auxiliary lamp may contain, in most cases, a lamp burning on a separate source of current assuring against power failure.

With the foregoing and other objects in view, the invention will be more fully described hereinafter, and will be more particularly pointed out in the claims appended hereto.

In the drawings, wherein like symbols refer to like or corresponding parts throughout the several views.

Figure 1 is a vertical central section, with the suspension stem partly broken away, of a surgical operating luminaire embodying the features of this invention.

Figure 2 is a detail enlarged vertical section taken through the connector structure of the device.

Figure 3 is a detail perspective view of the lamp with its primary heat absorbing and secondary reflector elements in relation thereto.

Figure 4 is a detail face view of the cover for the lamp circuit controls.

Figure 5 is a vertical section taken on the line 5—5 of Figure 4, showing the mercury contact tubes of the circuit controls.

Figure 6 is a diagram of the main lamp control circuit.

Referring now to the drawings, and first to Figures 1 and 3, a light source 10 preferably in the form of an incandescent lamp bulb is used. The bulb 10 preferably has a double filament 11, as shown in detail in the diagram of Figure 6, in the form of a transverse coil having its ends connected to a common lead 12 and having an intermediate opposite pole lead 13 taken off from the central portion of the coil. The opposite ends of the coil filament 11 provide independent sources of light which burn in unison or simultaneously so that upon the burning out of one side or end the other side or end maintains the light source, although in a diminished state. The light source 10 is adjustable as to focus by mounting the bulb in a socket 14 which is axially movable such as by a pinion 15 which meshes with a laterally disposed rack 16 in the side of a sleeve extension 17 of the socket 14. The pinion 15 is fixed on a transverse shaft 18 mounted in a cap 19 and having a clutch element 20 on one end and a spring 21 on its other end between the cap 19 and the pinion 15 to urge the latter frictionally against the side of the rack 16 and hold the lamp bulb 10 in adjusted position. The sleeve 17 is thus axially movable through the cap 19 to raise and lower the bulb 10, and the cap 19 may be removed from the lamp structure with the bulb 10 and socket 18 for removal of the lamp and the like.

The body of the lamp comprises a dome or housing 22 which is provided at its center with an opening to receive the lamp bulb 10. The bulb 10 is adjustable through the top of the dome 22 by means of its mechanism above described, the cap 19 fitting slidably over an upstanding collar 23 anchored to the dome 22. Inside the opening in the dome an annular ring 24 is fastened supporting therefrom a second ring 25 by means of three, or any convenient number of, rods 26. The ring 25 provides a seat for a prismatic lens 27 which receives and straightens out the light rays emitted from the lamp 10 in an axial direction. At a suitable height on the rods 26 an annular supporting frame 28 is anchored by the connecting rods 29. The frame 28 serves to hold the primary heat filter of blue-green or blue glass 30 about the light source 10. A retaining ring 31 is placed at the top of the filter 30 and yieldably anchored to the rods 26 by the springs 32 which take care of expansion and jars while holding the filter in place.

Also supported on the rods 26 is a spherical re-

flecting ring 33 located below the bottom of the filter 30 and of sufficient width to reflect back through the bulb and filter, rays other than axial emitted from the bulb and not passing through the filter 30. The reflecting ring 33 is held by the clips 34 on the rods 26.

The dome 22 holds the principal reflector 35 which is apertured to accommodate the lamp assembly and the suspended devices last referred to so that the filament 11 of the lamp 10 is at its focus. The reflector 35 is offset outwardly at its rim to provide the flange 36 which seats on the retaining ring 37 which in turn is bolted or otherwise secured to the dome 22 as at 38. The retaining ring 37 also serves to hold the secondary heat filtering lens 39 secured to the ring 37 by the clamping members 40 located at several points around the ring. In effect the ring 37 and lens 39 comprise a non-hinged removable door over the opening of the dome 22.

At opposite points on the axis of balance of the dome 22 is a pair of trunnions 41 secured to the dome by a corresponding pair of lugs 42 on the interior thereof to which the trunnions are bolted or otherwise fastened through the side wall of the dome. These trunnions 41 serve as attachments for the ends of the yoke 43 from which the lamp is pivotally suspended. The outer ends of the trunnions are provided with ornamental nuts 44 which provide friction between the yoke and trunnion to hold the lamp at various angles of adjustment.

The lamp is suspended from the ceiling on the yoke 43 which is itself freely rotatable due to the following arrangement: Firmly attached to the ceiling is the bracket 45 having a central bore providing a long bearing surface for the stem 46. The stem is held in the bore by lock-nuts 47 or the like which rest on the upper member of the thrust bearing 48. The stem 46 extends down through the connector 49 and, as shown in Figure 2, carries the connector upon the thrust bearing 50 and the lock nut 51. The connector 49 is composed of three sections in this form of the device. The central section 52 is fixed to the stem 46 by the pin 53 and carries the feed wires, from the ceiling, to a pair of connector brushes 54, 55 which supply current to the lamp 10. The lower section 56 of the connector 49 carries the yoke 43 and is free to revolve about the stem 46 and beneath the central section 52. Electrical contact between the brushes 54, 55 and the lamp 10 is established by providing the lower section 56 with a pair of conducting rings 57, 58 each set in the bottom of a deep groove in the insulating ring 59 constituting the female member of the connector. The posts 60, 61 connect the rings 57, 58 with the lead wires 12 and 13 respectively. The central section 52 is likewise provided with an insulating ring 62 which has downwardly extending annular ridges 63, 64, of the same material constituting the male connector member and which fit snugly into the grooves containing the conducting rings 57, 58.

The upper section 65 of the connector 49 is freely mounted about the stem 46 and rests on the central section 52. This upper section serves to carry an auxiliary lamp described below. The electrical connections are made through a pair of brushes 66, 67 connected to leads 68, 69 respectively from a power source preferably independent of the source for the main lamp. These brushes also are set in annular ridges 70, 71 of the male insulating ring 72 and bear against the conducting rings 73, 74 at the bottom of grooves cut into the female insulating ring 75 carried by the upper section 65. Posts 76, 77 connect the lamp wires 68, 69 to the rings 73, 74 respectively.

The brushes 54, 55 in the ring 62 and the brushes 66, 67 in the ring 72 are each formed of a hollow sleeve 78 threaded into the insulating ring and ridge, and a tungsten contact block 79 at the outer end of the sleeve urged into contact by a spring 80 the tension of which is adjusted by moving the screw plug 81 in the sleeve 78. By using contact brushes at the outer ends of the ridges in the insulating rings the contacting surfaces are surrounded by insulation and any tendency towards arcing is very greatly reduced.

Referring again to Figure 1 and the auxiliary light supported by the upper section 65 of the connector 49: the section 65 carries the forked cradle 82 on a trunnion 83. On one end of the cradle 82 is a counterbalancing weight 84 and on the other the lamp structure. The lamp consists in a dome 85 apertured at its top to receive the bulb 86 in its socket 87. The socket 87 is provided with a rack 88 by which adjustment of the bulb 86 in the dome is accomplished. An adjustment handle 89 is mounted in a cap 90 fastened on the dome 85 and carries at its inner end a pinion meshing with the rack 88. Within the dome 85 is the reflector 91 likewise apertured to receive the bulb 86. A frame 92 is suspended from the reflector about the bulb and holds a prismatic lens 93 beneath the bulb. The front of the reflector is covered by a lens 94 held in place by a ring 95 which also serves to retain the reflector 91 in the dome. At opposite points on the outside of the dome 85 a pair of trunnions 96 receive the ends of the forked cradle and provide for angular adjustment of the light.

Current is supplied to the lamps through the connector 49 as seen above. The wires 12, 13 and 68, 69 pass up through the stem 46. As this stem is rotatable a second connector system is used at its upper end. On the stem is mounted the cup ring 97 which fits around the lower bearing portion of the ceiling bracket 45 and carries on its upper face an insulating ring 98 provided with grooves and conducting rings. The bracket 45 has an insulating ring 99 set therein and provided with downwardly extending ridges corresponding to the grooves in the ring 98. As in the other connector rings a set of brushes is placed at some point on the ridges to establish contact between a power source and the supply wires in the stem 46 which are connected to the conducting rings in the ring 98. The stem 46 in this form of the invention carries two sets of supply wires, one for the main light and the other for the auxiliary. It is necessary, therefore, to make the commutator as shown with four grooves and four ridges to accommodate the two circuits.

The bracket 45 and connector 98, 99 are enclosed in a diffusing globe 100 which is lighted by a number of bulbs 101 suspended from the bracket 45 at points around the inside of the globe. This light forms a general room light and is controlled independently of the operating lights.

In Figures 4 and 5 the control mechanism for the lamp systems is shown. The control panel 102 is located at a distance from the lamps and may be operated by unsterile attendants. A simple switch operated by the knob 103 controls the ceiling light and a second switch 103' controls the auxiliary light circuit. As it is desirable to have different intensities available in the main light the control for this light consists in a shaft 104

mounted through the panel 102 and having at its outer end the knob 105. On the shaft 104 are mercury switches 106 connecting the main light through successive stages of the resistance 107 with the power source. In the arc of the pointer of knob 105 the panel 102 bears figures representing the foot candles delivered by the lamp with the various stages of resistance. The mercury switches are placed at various points on the circumference of the shaft 104 so that rotation of the shaft closes them one by one. Figure 6 illustrates the circuits involved. The mercury switch control is diagrammatically shown at 106 which connects various stages of the resistance 107 in the circuit as it moves through its arc.

The main lamp may be focused for depth as before stated by moving the bulb 10 in the reflector 35. This movement is given the bulb by turning the rod 109 which is connected through a universal connection 110 with the male member of the clutch 20. The rod 109 passes through the bearing 111 fastened to the dome 22 and extends to a position below the edge of the lamp where it is provided with the handle 112. The clutch 20 has a male member with a key on its face and a female member with a corresponding groove on its face. The female member drives the pinion 15 while the male member is moved by the rod 109 and handle 112.

When it is desired to remove the lamp 19 for any reason the adjusting handle 112 is rotated to place the key of the clutch 20 in a line parallel with the axis of the lamp in which position the cap 19 may be lifted off of the collar 23 the key of the clutch sliding up and out of the groove.

The adjustability of the main lamp makes it possible to use it with the stem 46 either offset or straight. Rotation of the lamp about the stem 46 or about the trunnions 41 is aided by placing handles 113 on the retaining flange 37.

From Figure 1 it will be seen that rays of light emanating from the filament of the bulb 10 in the arc between the rays A and B pass through the primary heat filter 30 where they lose a portion of their heat, and strike the reflector 35 where they are projected downwardly through the heat filtering door cover 39. In the range of rays between B and C the light would be wasted, striking the flange 36 of the reflector 35 which would not reflect it outwardly, or a portion of the rays which have considerable heat would pass beneath the primary heat filter and emerge from the lamp bearing an undesirable quantity of heat. To utilize this range of light the reflector 33 is employed. The rays striking the reflector 33, for example, the ray D, is reflected back through the bulb 10 and the primary heat filter 30 to the reflector 35. Such rays are thus filtered of their heat and directed to an useful portion of the reflector. In the case of the rays emanating in a substantially axial direction and passing within the opening of the reflector 33, such rays as C strike the prismatic lens 27 and are straightened out and directed downwardly through the door cover 39. The light thus flooded from this operating light approaches very nearly to the lighting ideal of cold light. The heat bearing rays are principally those emitted in the range from A to B and these in the present invention are twice filtered before they emerge. The axial rays passing through the prismatic lens 27 carry only a small portion of the heat and the single filtering through the secondary filtering door cover 39 is sufficient to take out practically all of their heat. The usefulness of the main light may be increased in many cases by forming the stem 46 with an offset or a curve so that the whole lamp may be swung through a circle the radius of which depends on the degree of offset.

The auxiliary light is rotatable in a circle about the main light so as to move completely around an operating table or the like on which the main light is played. This second light is also adjustable with reference to height by swinging up or down about its trunnion 83. Further adjustment is provided by the pivot on the end of the swinging forked cradle. This permits the light to be directed horizontally or even upwardly as desired in operating work. In general the auxiliary lamp may be used as a spotlight.

It is obvious that various changes and modifications may be made in the details of construction and design of the above specifically described embodiment of this invention without departing from the spirit thereof, such changes and modifications being restricted only by the scope of the following claims.

What is claimed is:

1. In a surgical operating luminaire, a dome light fixture, a suspension tube carried thereby, a three part electrical connection housing mounted on the tube with the intermediate housing part fixed to the tube and the upper and lower housing parts free to turn on the tube, a main lamp mounted on one of said free turning housing parts, and a spotlight mounted independently on the other free turning housing part.

2. In a surgical operating luminaire a ceiling fixture, a supporting stem suspended from said fixture, electrical connection between said fixture and stem, a connector housing having three relatively movable parts at the end of the stem away from said fixture, an auxiliary light carried by one of the parts of said housing, a main light carried by a second part of said housing, the third part of said housing being fixed to the stem, current carrying means in the stem and ending in said fixed part of the housing, and means for maintaining electrical contact between said fixed part and said first and second parts.

3. In a surgical operating luminaire, an operating light comprising a light source, a dome shaped casing apertured at its top and open at the bottom, a reflector within said casing and similarly apertured top and bottom to direct light downwardly, a mounting for said light source extending down through the tops of said casing and reflector, an open frame suspended through the tops of said casing and reflector, a lens disposed a substantial distance beneath said light source in said frame, a primary heat filtering cylinder around said light source, yieldable supporting means for holding said cylinder on said frame in spaced relation to said light source and lens, an annular reflector mounted on said frame beneath said cylinder and spaced from said cylinder and lens to reflect light rays passing between the bottom of said cylinder and the outer edge of said lens through said filter, and a heat filtering disc disposed across the openings of said reflector and casing to effect a further removal of heat from all light emerging from the operating light, said lens and cylinder and annular reflector being open to permit free circulation of air.

4. In a surgical operating luminaire, an operating light comprising a light source, a dome shaped casing apertured at its top and bottom, a dome shaped reflector within said casing and similarly apertured top and bottom, a number of

spaced rods secured to said casing and extending downwardly from the top opening thereof in spaced relation around said light source, a ring suspended within said casing and reflector on said rods at a position substantially below said light source, a lens supported by said ring, an annular frame supported by said rods a substantial distance above said lens, a heat filtering cylinder resting on said frame around and spaced from said light source, a yieldable connection between the top of said cylinder and said rods to hold the cylinder yieldably on said frame, and means for suspending said light source within said cylinder, said lens and cylinder being open to permit free circulation of air.

5. In a surgical operating luminaire, a dome light, a main operating light, a pivotal suspension for holding said main operating light beneath said dome light, slip ring connectors for making electrical connection between said dome light and said suspension, a spotlight, a counterweighted cradle for holding said spotlight, and a pivotal slip ring connection for making electrical connection between said suspension and said cradle.

6. A rotatable electrical connector comprising a supporting stem, a ring disposed longitudinally about said stem, anchoring means for securing said ring to said stem in fixed relation, a second ring disposed longitudinally of said stem alongside of the first said ring, said second ring having a bearing portion next to said stem, a pair of flat annular insulating plates having closely interfitting and deeply intermeshing annular ridges and grooves, contact rings at the bottoms of said grooves, and brushes with sleeves mounted at one point on the crests of said ridges and spring urged contact blocks in the sleeves for spring engagement with said contact rings, one of said annular plates being secured to the first ring and the other of said plates being secured to the second ring.

7. In a surgical operating luminaire, a support, a light, means for pivotally mounting said light on said support, a pair of insulating plates with deeply intermeshing and closely interfitting grooves and ridges, conducting rings at the bases of the grooves of one of said plates, sleeves mounted through the ridges of the other of said plates, contact blocks in said sleeves at the tops of said ridges, springs mounted in said sleeves to exert spring tension on said blocks to urge the same outward, and means for mounting the plates one on the support and the other on said means for pivotally mounting said light in close fitting engagement whereby the spring pressed contact blocks are spring urged against the conducting rings to make constant electrical contact therewith and the ridges and grooves surround the area of contact of said blocks and rings to maintain them substantially closed to the atmosphere by a thick insulating layer to prevent arcing taking place in the operating atmosphere.

HORACE W. ALEXANDER.