H. W. SHIPLEY.

RAIL TIE AND FASTENER.

APPLICATION FILED NOV. 20, 1914.

1,135,065. Patented Apr. 13, 1915.

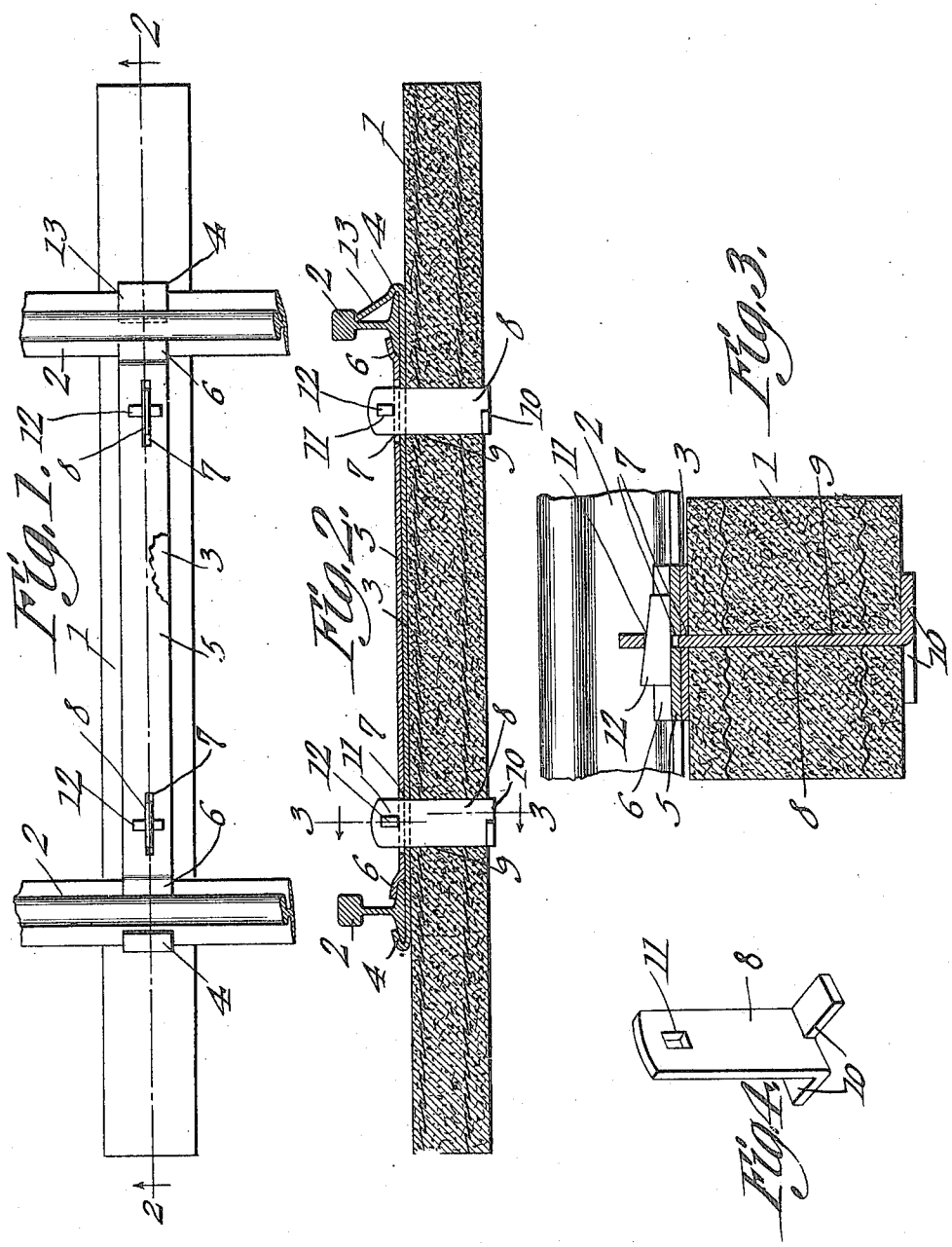


Witnesses

J. R. Tomlin

Monroe E. Miller

H. W. Shipley, Inventor

by C. A. Snow & Co. Attorneys

'E NORRIS PETERS CO., PHOTO-LITHO., WASHINGTON, D. C.

# UNITED STATES PATENT OFFICE.

HERMAN W. SHIPLEY, OF CENTER JUNCTION, IOWA.

## RAIL TIE AND FASTENER.

1,135,065. Specification of Letters Patent. Patented Apr. 13, 1915.

Application filed November 20, 1914. Serial No. 873,174.

*To all whom it may concern:*

Be it known that I, HERMAN W. SHIPLEY, a citizen of the United States, residing at Center Junction, in the county of Jones and State of Iowa, have invented a new and useful Rail Tie and Fastener, of which the following is a specification.

The present invention appertains to railroad ties, and aims to provide a novel and improved rail tie and means for fastening the rails upon the tie.

This invention contemplates the provision of simple and effective means for holding and securing the rails upon a concrete, wooden or other tie, whereby the use of spikes is eliminated, and whereby the rails will be held firmly in place against lateral movement or spreading.

It is also within the scope of the invention, to provide a device of the nature indicated, which will be comparatively simple, non-encumbering and inexpensive in construction, as well as being convenient, practical and efficient in use.

With the foregoing and other objects in view which will appear as the description proceeds, the invention resides in the combination and arrangement of parts and in the details of construction hereinafter described and claimed, it being understood that changes in the precise embodiment of the invention herein disclosed can be made within the scope of what is claimed without departing from the spirit of the invention.

The invention is illustrated in its preferred embodiment in the accompanying drawing, wherein—

Figure 1 is a plan view of the improved tie and fastener for the rails. Fig. 2 is a longitudinal section of the device, taken on the line 2—2 of Fig. 1. Fig. 3 is an enlarged cross section of the tie and fastener, taken on the line 3—3 of Fig. 2. Fig. 4 is a perspective view of one of the keeper plates.

The present appliance is adapted for use with a cross tie 1, of concrete, wood, or any other material over which the rails 2 extend.

In carrying out the present invention, a strip or bar 3 is seated upon the tie 1 in a longitudinal position, transversely of the rails 2, and extends below the base flanges of the rails to support the same, the ends of the strip or bar 3 being reflexed or bent back, as at 4, to hook over the outer or remote edges of the base flanges of the rails, to hold the rails against separation or spreading.

The second strip 5 is seated upon the strip 3, and has its ends offset upwardly, as at 6, to engage over the inner edges of the base flanges of the rails, for holding the rails against inward movement, and to coöperate with the bent back or hooked portions 4 of the strip 3 to hold the rails in place against transverse or vertical movement.

As a means for securing the strips 3 and 5 to the tie 1, the strips are provided with registering or complementing longitudinal slots 7 adjacent the rails or end portions of the strips, and upright keeper plates 8 are engaged through the slots 7, and through the slots 9 provided in the tie 1, the lower ends of the plates 8 being split and bent under the tie 1, as at 10, to anchor or secure the plates to the tie, and to prevent the plates 8 from moving upward or lifting out of the tie.

The upper protruding ends of the plates 8 are provided with openings 11 immediately above the strip 5, and wedges 12 are driven through the openings 11 so as to seat upon the strip 5 and to clamp the strips 3 and 5 firmly in place upon the tie 1, and whereby the offset ends 6 of the strip 5 will be clamped against the rails to hold the rails properly in place.

When the device is employed upon curved tracks, one or both of the hooked or bent back end portions 4 of the strip 3, may be provided with an inclined brace 13 engaging under the head of the respective rail or rails, for bracing the rail against outward or spreading movement.

The parts of the present device may be inexpensively manufactured, and may be readily applied to the tie 1, the keeper plates 8 being readily inserted upwardly through the slots 9 in the tie, and the strip 3 being readily placed over the upper ends of the plates 8, so that the rails may be applied upon the end portions of the strip 3, and whereby the strip 5 may then be applied over the plates 8 and against the rails for the introduction of the wedges 12 through the openings 11 of the plates 8 to clamp the parts in place.

The other advantages and attributes of the present device will be obvious to those versed in the art, without further comment being deemed necessary.

What is claimed is:

1. In a device of the character described, keeper plates engageable upwardly through a tie and having openings at their upper

ends, a strip engageable over the upper ends of the keeper plates and having means at its ends for engaging the outer edges of the base flanges of a pair of rails, a second strip engageable over the upper ends of the keeper plates to seat upon the first mentioned strip and having means at its ends for engaging the inner edges of the base flanges of the rails, and wedges insertible through the said openings of the keeper plates to bear upon the second mentioned strip for clamping the parts together.

2. In a device of the character described, upper and lower strips having their ends formed to receive and hold the base flanges of a pair of rails, and having registering slots adjacent their end portions, upright keeper plates insertible upwardly through a tie and having their lower ends formed to engage under the tie, the keeper plates having openings at their upper ends to be disposed above the strips, the keeper plates being adapted to be received by the slots of the strips, and wedges insertible through the openings of the keeper plates to bear upon the upper strip for clamping the parts together.

In testimony that I claim the foregoing as my own, I have hereto affixed my signature in the presence of two witnesses.

HERMAN W. SHIPLEY.

Witnesses:
D. S. WARD,
T. B. KENT.

Copies of this patent may be obtained for five cents each, by addressing the "Commissioner of Patents, Washington, D. C."