April 8, 1952 A. C. DENSON 2,591,790

RADIO AND TELEVISION ANTENNA

Filed Dec. 23, 1948

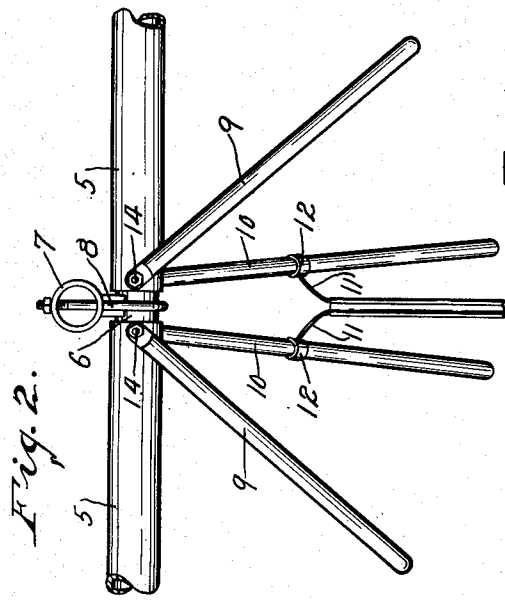

Fig. 2.

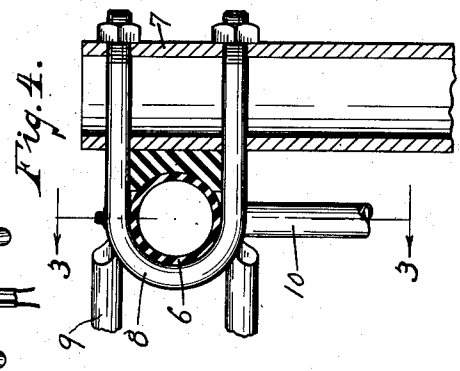

Fig. 4.

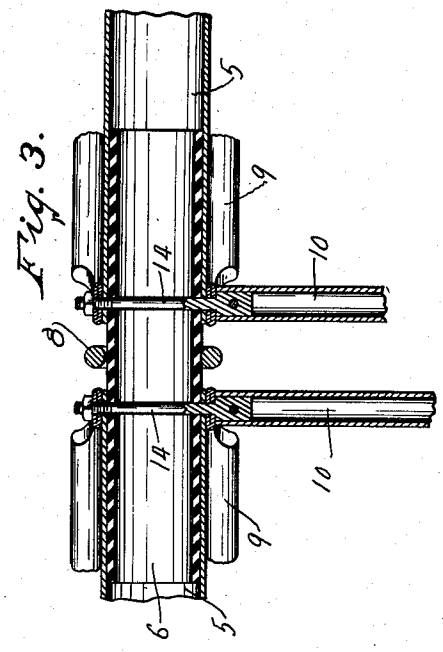

Fig. 3.

Fig. 1.

INVENTOR.
ALFRED C. DENSON
BY
Louis V. Lucia
ATTORNEY

Patented Apr. 8, 1952

2,591,790

UNITED STATES PATENT OFFICE

2,591,790

RADIO AND TELEVISION ANTENNA

Alfred C. Denson, Rockville, Conn.

Application December 23, 1948, Serial No. 67,029

2 Claims. (Cl. 250—33)

1

This invention relates to antennae and more particularly to an antenna which is especially intended for use with television receivers.

An object of the invention is the provision of an antenna which is adapted for use in receiving both high and low band television signals.

A further object of this invention is to provide an antenna having separate elements for high and low frequency bands and in which the said elements are adjustable for direction of signal.

A still further object of this invention is to provide an antenna having such elements which are adapted for separate orientation with direction of signals.

Further objects and advantages of this invention will be more clearly understood from the following description and the accompanying drawings in which:

Fig. 1 is a perspective view of an antenna embodying my invention.

Fig. 2 is an enlarged plan view of said antenna with portions broken away and the connecting bar omitted therefrom.

Fig. 3 is a further enlarged fragmentary view on line 3—3 of Fig. 4.

Fig. 4 is a side view, in central vertical section.

As shown in the drawings, my improved antenna comprises a pair of tubular element bars 5—5 which are insulated from each other and supported on an insulating sleeve 6 that is secured to a suitable mast 7, preferably by means of a U-bolt 8.

The said element bars 5—5, have electrically connected thereto, a pair of element vanes, or wings, 9—9 to which are secured a pair of Q-bars 10—10, by means of which the said antenna is adjustably connected to conductors 11—11 with a pair of connecting members 12—12 that are slidably adjustable on said Q-bars for varying the effective length of the Q-bar in tuning the antenna.

The vanes 9—9 are preferably connected by means of an insulated bar 13 which is swivelly secured to each of the vanes for adjustably retaining them at relatively fixed angles.

Each of the Q-bars 10—10 is provided with a connecting bolt 14 which is electrically connected to the Q-bar and extends through the ends of

2

the associated vane 9 and thereby provides an electrically connected unit, at each side of the antenna, consisting of a vane 9, a tube 5 and a Q-bar 10; each of said units being insulated from the other by the tube 6.

The bars 5—5 will provide a low frequency band antenna while the vanes 9—9 will provide a high frequency band antenna. Also, in the operation of my antennae, the bars 5—5 will act as reflectors in relation to the vane.

In the use of my improved antenna, the bars 5—5 are first adjusted on the mast for orientation with the direction of the low frequency signals and the vanes 9—9 may then be adjusted for separate orientation with direction of the high frequency signals, by turning them upon the bolts 14—14, and the connecting bar 13 will maintain the said vanes with a fixed included angle between them; this being important when adjusting the vanes for direction of signal.

The vanes 9—9 are preferably fixed with an included angle of substantially 75 degrees between them and this angle is maintained by the bar 13 when the said vanes are adjusted for different directions. In Fig. 2, the said bar 13 is omitted.

I claim:

1. An antenna of the character described comprising a mast, a tubular insulating sleeve mounted on said mast, a pair of oppositely extending straight tubular bars mounted over the end portions of said sleeve and spaced from each other, a U-shaped tubular vane pivotally and directily connected to each of said tubular bars; the said vanes being relatively disposed at an angle to each other and to said tubular bars, a pair of Q-bars each electrically connected to one of said vanes and one of said tubular bars by means of a connector projecting from the end of each Q-bar and extending through the legs of its corresponding vane and a tubular bar and the insulating sleeve, and a tie bar of insulating material pivotally connecting the said vanes and permitting adjustment thereof for different directions while maintaining a predetermined fixed included angle between them.

2. An antenna of the character described comprising an insulating sleeve, a straight tubular bar mounted over and projecting from each end of said sleeve, a U-shaped tubular vane pivotally

connected to each tubular bar with the legs of the vane straddling the bar and in contact with opposite sides thereof, a Q-bar connected to each of said tubular bars and vanes by means of a connector projecting from the end of each Q-bar and extending through the legs of its corresponding vane and tubular bar and insulating sleeve and thereby mounting and electrically connecting a Q-bar, a vane and a tubular bar as a unit of the antenna.

ALFRED C. DENSON.

REFERENCES CITED

The following references are of record in the file of this patent:

UNITED STATES PATENTS

Number	Name	Date
2,259,628	Fener et al.	Oct. 21, 1941
2,299,218	Fener	Oct. 20, 1942
2,471,256	Wintermute	May 24, 1949
2,494,665	Marshall	Jan 17, 1950

OTHER REFERENCES

"Tele-Tech," March 1947, pages 58 to 62.

"Radio News," October 1948, page 99.

"ARRL Antenna Book," 1946 edition, pages 47 and 48.