July 14, 1931. G. H. IRWIN 1,814,163

COMBUSTION MIXTURE CONTROL

Filed Aug. 11, 1928 2 Sheets-Sheet 1

Fig. 1.

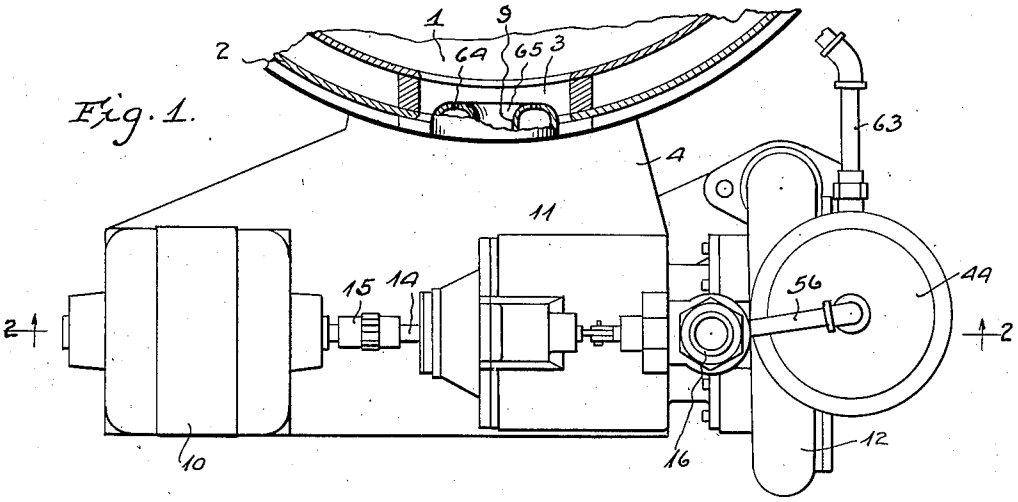

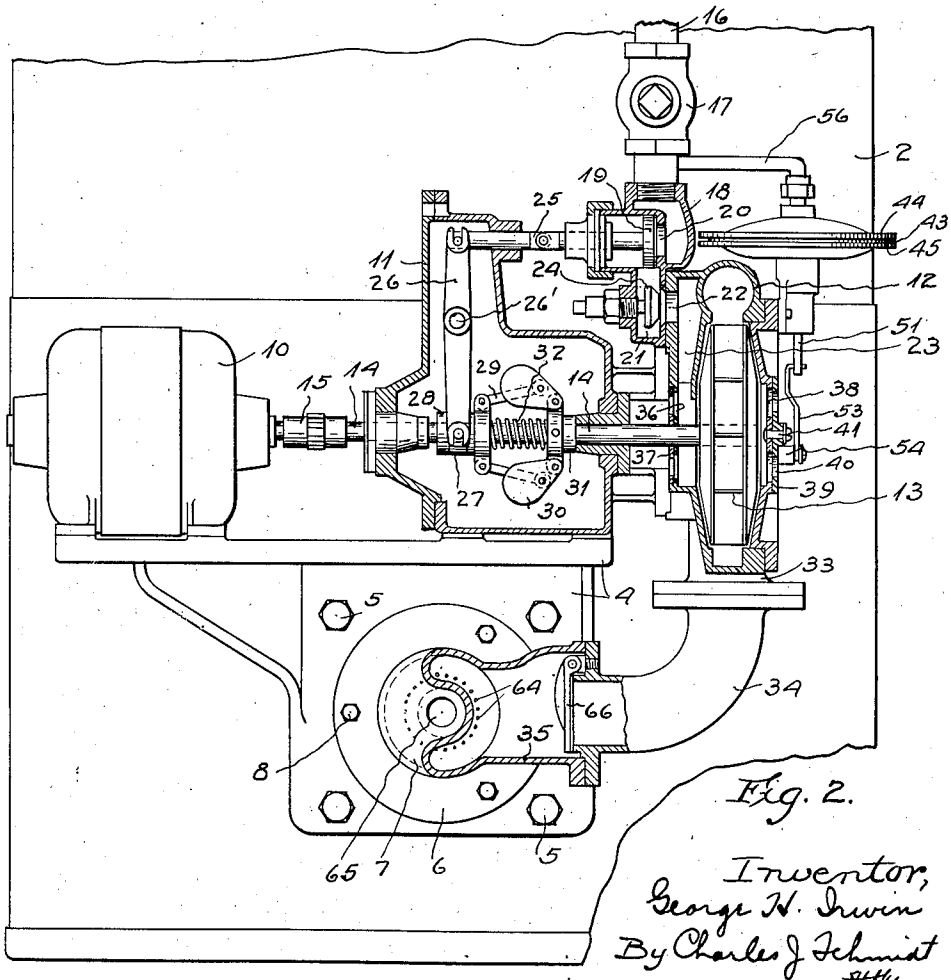

Fig. 2.

Inventor,
George H. Irwin
By Charles J Schmidt
Atty.

July 14, 1931. G. H. IRWIN 1,814,163

COMBUSTION MIXTURE CONTROL

Filed Aug. 11, 1928 2 Sheets-Sheet 2

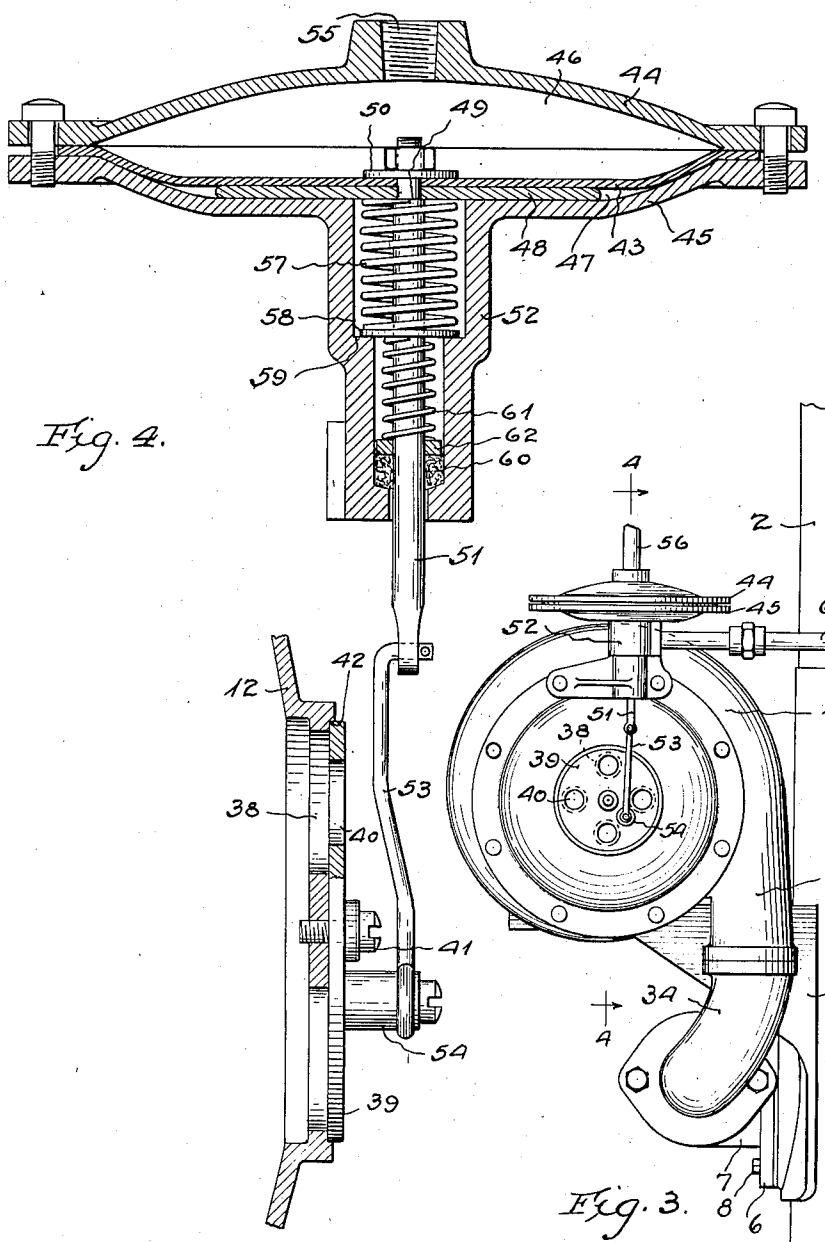

Fig. 4.

Fig. 3.

Inventor,
George H. Irwin
By Charles J Schmidt
Atty.

Patented July 14, 1931 1,814,163

UNITED STATES PATENT OFFICE

GEORGE H. IRWIN, OF CHICAGO, ILLINOIS

COMBUSTION MIXTURE CONTROL

Application filed August 11, 1928. Serial No. 298,954.

My invention relates to improved combustion mixture control for gas fired boilers or furnaces where natural or manufactured gas and air are first properly proportioned and thoroughly mixed in a mixing device such as a fan or blower to form a complete and perfect combustion mixture which is delivered to the fire box of the boiler or furnace without further admixture of air.

The fan is connected to receive gas from a supply main and has air inlets of adequate area for sufficient air intake during normal range of gas pressure in the main. Sometimes the gas pressure may materially diminish, and it may be necessary to correspondingly diminish the air inlet to the fan in order to maintain the proper proportion of gas and air and efficient combustion mixture. The important object of my invention is to automatically adjust and control the air supply to the fan in accordance with the variation in gas pressure and thereby to assure at all times delivery of a perfect complete combustion mixture by the fan.

Another object is to provide improved arrangement for assuring safety against gas leak or back firing.

Referring to the drawings:—

Figure 1 is a plan view of the combustion mixture supplying and controlling apparatus applied to a boiler which is shown in horizontal section.

Figure 2 is a front elevational view of the apparatus and boiler, partly in section on plane 2—Fig. 1.

Figure 3 is a side elevation of the apparatus and boiler, and

Figure 4 is an enlarged sectional view on plane 4—4 Fig. 3.

The firebox 1 of the boiler 2 has the combustion mixture inlet opening 3, but is otherwise sealed against the entrance of air. A bracket structure 4 is secured to the boiler at the inlet opening 3 by bolts 5, and the flange 6 on the burner structure 7 is detachably secured to the bracket as by bolts 8 with its nozzle 9 projecting into the opening to direct the burning combustion mixture or flame into the firebox or furnace.

On top of the supporting bracket are mounted a motor 10 and the housing 11 for centrifugally operated mechanism for automatically admitting or shutting off the gas flow to the fan housing 12 secured to and supported by the housing 11. In the arrangement shown, the fan rotor 13 is secured to the shaft 14 which is journaled on and extends through the housing 11 and is connected with the motor by a coupling 15.

The gas supply to the fan is by way of pipe 16, in which may be interposed a main shut-off valve 17, the pipe connecting with the housing 18 for the automatic shut-off valve 19, the gas flowing through the valve port 20 into the valve chamber 21 and from there through passage ways 22 and 23 to the fan housing at the axis thereof. A regulator or setting valve 24 cooperates with the passage 22 to determine the volume of gas flow to the fan under normal gas pressure.

The automatic opening and shut-off valve 19 for the gas flow is connected by the stem structure 25 with the outer end of a lever 26 fulcrumed at 26′ within the housing 11 and connecting at its inner end with the collar 27 surrounding the hub 28 on the shaft 14. This hub rotates with, but is slidable on, the shaft and is connected by links 29 with the centrifugal weights 30 which swing on the hub 31 secured to the shaft. A compression spring 32 encircles the shaft between the hubs and resists movement of the hub 28 and tends to hold the hub and lever in position to cause the valve 19 to close the valve port 20.

Air enters the fan housing at its axis and its tangential outlet 33 is connected by the fitting 34 with the inlet end 35 of the burner structure to deliver the thoroughly mixed gas and air to the burner nozzle.

The fan housing has preferably permanently open air ports 36 whose area is adjusted or set by means of a shutter 37. These ports and shutter are preferably located at the inner side of the fan housing to be sufficiently inaccessible to discourage tampering therewith by unskilled persons. At the outer side of the fan housing are the auxiliary air ports 38 controlled by the rotary shutter plate 39 having ports 40. The

plate shown is circular and rotates on and is held to its seat on the fan housing by the post 41. The annular shoulder 42 surrounding the plate will assist in alining and guiding it.

The shutter 37 is permanently adjusted and set so that the continuous air inlet area together with the auxiliary air inlet area when the auxiliary ports 38 are wide open will be sufficient to furnish adequate air supply for the volume of gas delivered to the fan past the regulator valve 24 during normal range of gas pressure in the gas main and supply pipe 16. However, the gas pressure may at times drop considerably below normal and the air volume must then be correspondingly reduced in order to maintain the efficiency of the combustion mixture delivered by the fan. An important feature of my invention is to accomplish such air regulation automatically in accordance with the reduction in gas pressure, and by the reduced air inlet to increase the suction effort of the fan on the gas main so that the fan will tend to draw sufficient gas from the main in spite of diminishing gas pressure.

The air regulation is accomplished by a diaphragm 43 operating the auxiliary air shutter 39. This diaphragm may be of leather or other suitable material and is clamped at its edge between the housing walls 44 and 45 to form upper and lower chambers 46 and 47. A piston 48 is secured to the diaphragm between the shoulder 49 and washer 50 on the piston rod 51, this rod passing through the tubular lug 52 on the wall 45 and being connected by link 53 with the crank pin 54 on the auxiliary air shutter 39. The diaphragm structure may be supported in any convenient position. As shown it is mounted by means of its lug on the side of the fan housing.

The upper wall 44 has the gas inlet 55 from which a pipe 56 extends to the gas main 16 so that the chamber 46 above the diaphragm is subjected to the gas pressure. When the pressure is normal the diaphragm will be held down against the pressure of the spring 57 within the lug 52 between the piston 48 and the washer 58 seating on the ledge 59. In this position of the diaphragm the shutter 39 has its ports 40 in full registration with the auxiliary ports 38 for maximum auxiliary air inlet. When the pressure drops materially below normal the spring 57 will overcome the gas pressure and will raise the diaphragm and piston rod and the auxiliary air shutter will be rotated to restrict the auxiliary air inlet so as to maintain the proper proportion of gas and air for the combustion mixture although the volume of combustion mixture may be diminished. Even with the gas pressure at zero a perfect combustion mixture is obtained due to the fact that the air supply to the fan is restricted to the air inlets or ports 36 and the suction effort of the fan is greatly increased and exerted on the gas supply main to draw gas therefrom so long as any gas is available therein. With return of the gas pressure to normal the diaphragm will reopen the auxiliary shutter for the restoration of the air supply to normal.

In the lower end of the lug 52 soft packing material 60 surrounds the piston rod and is held compressed around the rod by a spring 61 encircling the rod between the washer 58 and the washer 62 over the packing. This spring is comparatively light and does not interfere with the operation of the piston spring 57. The packing is kept in proper condition by the light spring without undue resistance to easy operation of the piston rod and being inaccessible it cannot be tampered with.

To vent the chamber 47 below the diaphragm as the diaphragm operates a vent pipe 63 leads therefrom and is preferably connected with the smoke box or uptake of the boiler so that in case the diaphragm should at any time become ruptured from over pressure or wear, the gas leaking therethrough will flow through the vent and up the stack or chimney thus eliminating the danger and damage to the building or inmates.

The burner shown has the annular nozzle 9 which receives the combustion mixture from the burner inlet end 35, the outer wall of the nozzle having the gas ports 64 for directing the mixture into the fire box or furnace. A pilot flame may be applied in the opening 65 surrounded by the nozzle but preferably a spark plug (not shown) is inserted and connected with an electrical ignition circuit.

When the motor is not operating and the fan is at rest, the centrifugal mechanism holds the gas valve 19 closed. When the motor is put into operation the valve is opened for the flow of gas to the operating fan. Preferably the spring 32 is sufficiently stiff to delay the centrifugal mechanism from opening the valve until the motor and fan approach full speed, and to cause the valve to close rapidly when the motor circuit is opened so that the momentum of the motor, before it comes to rest, will continue to rotate the fan for a sufficient time to clear the fan housing and burner of any gas or combustion mixture, thereby insuring safety.

By delaying the opening of the gas valve to permit the motor to acquire nearly maximum speed with corresponding speed and pressure of air through the burner before gas is admitted to the fan, tendency to back firing will be eliminated.

To further guard against back firing, a

check valve 66 is applied in the passage from the fan to the burner.

I do not desire to be limited to the exact structure and arrangement shown, as changes and modifications may be made without departing from the scope of my invention.

I claim as follows:—

In a combustion system, the combination of a boiler, a blower for receiving and mixing air and natural or manufactured gas to produce a combustion mixture, a source of gas supply connected with the blower intake, and air inlet at the blower intake, a valve for said inlet, a diaphragm structure comprising a housing and a diaphragm therein, said gas supply source being connected with said housing at one side of said diaphragm whereby said diaphragm is subjected to the gas pressure, spring means resisting movement of the diaphragm by the gas pressure, said valve being connected with said diaphragm to be moved thereby to regulate the air inlet in accordance with the gas pressure variation whereby to maintain a fixed proportion of air and gas supply to the blower, a burner connected with the blower outlet to receive the combustion mixture, and a vent connection from the diaphragm housing to a combustion passage of said boiler for the escape of leakage gas in case the diaphragm should leak or become ruptured.

In witness whereof, I have hereunto subscribed my name this 9th day of August 1928.

GEORGE H. IRWIN.