Dec. 26, 1939. W. F. EPPENSTEINER 2,184,519

RECEIVING DEVICE FOR CASTINGS

Filed May 25, 1937 3 Sheets-Sheet 1

Fig. 1.

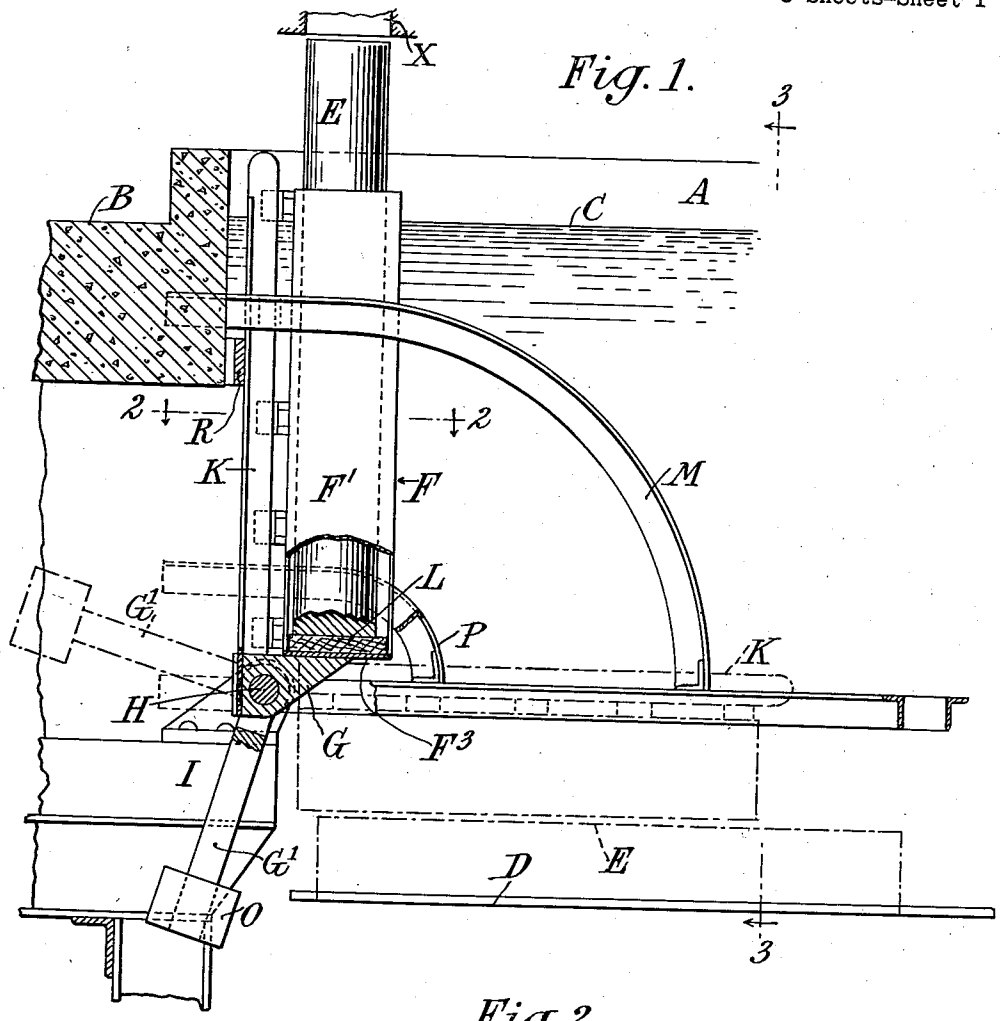

Fig. 2.

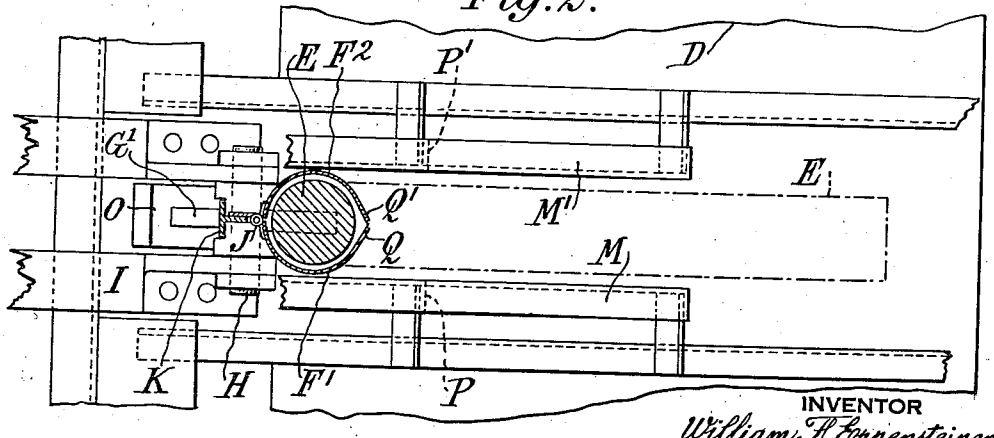

INVENTOR
William F. Eppensteiner
BY
Fraser Hupper & Manley
ATTORNEYS.

Dec. 26, 1939. W. F. EPPENSTEINER 2,184,519

RECEIVING DEVICE FOR CASTINGS

Filed May 25, 1937 3 Sheets-Sheet 2

Fig. 3.

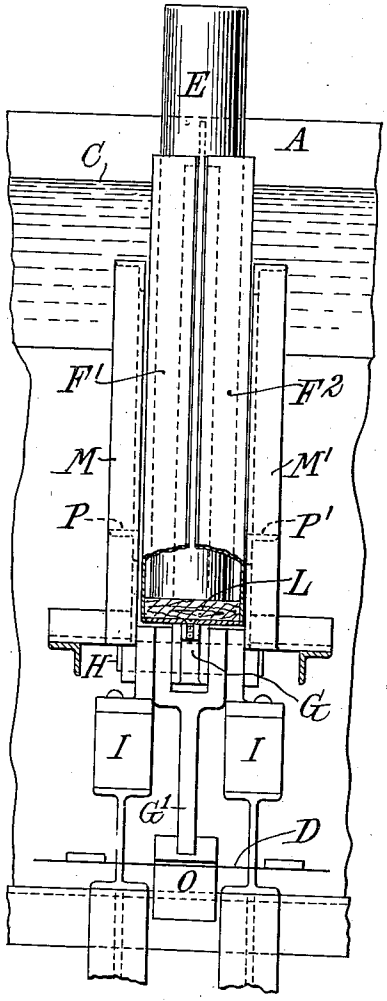

Fig. 4.

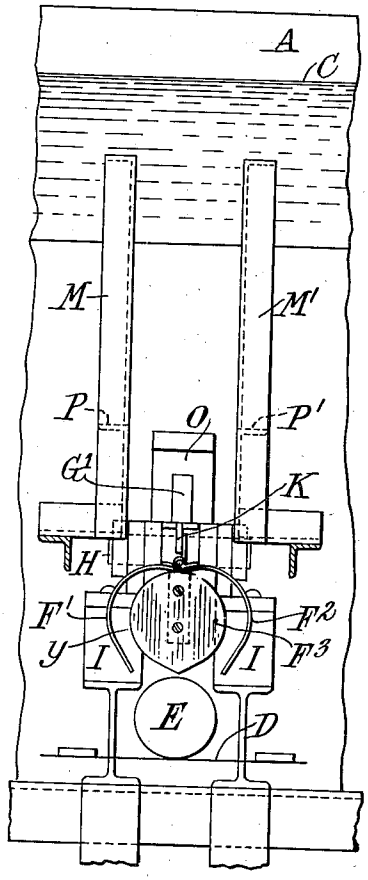

Fig. 5.

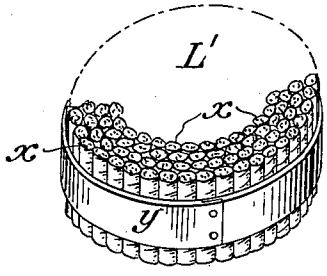

Fig. 5a.

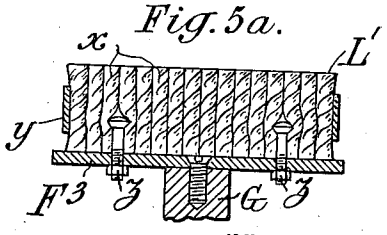

INVENTOR
William F. Eppensteiner.
BY
Fraser Thompson & Manley
ATTORNEYS.

Dec. 26, 1939. W. F. EPPENSTEINER 2,184,519

RECEIVING DEVICE FOR CASTINGS

Filed May 25, 1937 3 Sheets-Sheet 3

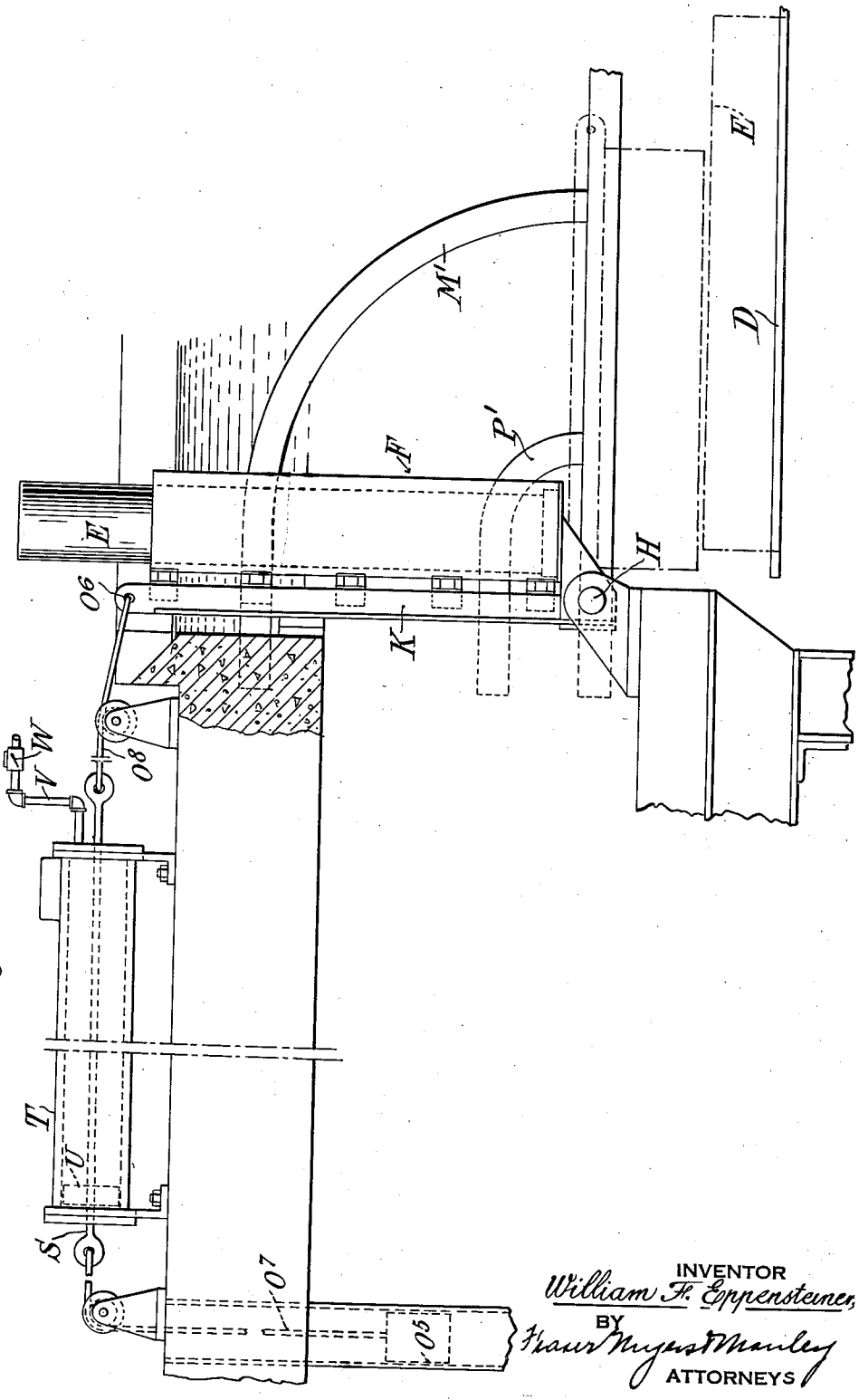

Fig. 6.

INVENTOR
William F. Eppensteiner
BY
Fraser Myers & Manley
ATTORNEYS

Patented Dec. 26, 1939

2,184,519

UNITED STATES PATENT OFFICE

2,184,519

RECEIVING DEVICE FOR CASTINGS

William F. Eppensteiner, Rahway, N. J., assignor to The American Metal Company, Limited, New York, N. Y., a corporation of New York

Application May 25, 1937, Serial No. 144,632

9 Claims. (Cl. 22—57)

This invention relates to a device for handling elongated forms or shapes, and aims to provide certain improvements therein.

The invention is particularly directed to a device for handling castings, and specifically copper castings of elongated form after they are dropped from the casting molds. The invention perhaps has its greatest utility in the vertical casting of copper wire bars or billets which, according to the best modern practice, are cast in undivided molds arranged in vertical position, the castings being dropped through the bottom of the molds when sufficiently solidified for mold ejection. It is the custom to discharge such castings from the molds into a bosh, which is a pit or pool of water, the effect of which is to further cool the castings before they are taken elsewhere for storage, shipment, or further treatment. Customarily, the bars or billets are caught on top of a submerged steel conveyor apron and transferred to such a point as may be required. This is particularly true in the use of a modern casting wheel where the successive castings are discharged at a given point in the bosh and conveyed to a delivery point.

In the operation of such an apparatus, when the billet or bar is dropped from the mold, which is located above the water level, there is a very considerable shock both to the bar or billet and the conveyor apron. At the time of delivery from the mold such bars or billets are still exceedingly hot, and are subject to bending or denting, while the impact upon the conveyor due to the momentum of the bar or billet is quite severe and makes for rapid wear of the belt.

According to the present invention I provide a means for receiving the bar or billet with little or no shock as it is dropped from the mold in a vertical position and then depositing the bar or billet upon the conveyor,—also without shock to either. More specifically, the receiver in its preferred form comprises what may be described as an upright cylinder or pipe, a considerable part of which is located below the water level of the bosh, which receiver is designed to receive each casting as it is delivered endwise and vertically from the mold.

The receiver is preferably mounted to tilt to a horizontal position immediately above the conveyor, this being preferably done by hinging the lower end of the receiver to a fixed point in the bosh. The actual turning of the receiver to a horizontal position may be by gravity, partly offset by a counterweight system, or may be done by hand or by power, such as by the use of an air-actuated piston. In any event, the change from a vertical to a horizontal position should be accomplished with little or no shock. After arriving at the horizontal position means are employed to eject the casting from the receiver, and while this may be done in different ways, I prefer to form the receiver in two halves, longitudinally, so that by merely spreading the halves the casting will drop sidewise from the receiver. Preferably the horizontal position of the receiver is reached immediately over the conveyor, which preferably travels in a path at right angles to the movement of the receiver, the distance between the lower side of the receiver and the upper face of the conveyor being as short as possible so as to make the drop of the casting inconsequential so far as shock is concerned.

The receiver is preferably freely accessible to the bosh water, and in its receiving position provides a somewhat confined body of water into which the casting drops endwise from the mold. This confined water acts to a certain degree to cushion the fall of the casting into the receiver.

The invention includes various other features of improvement, which will be hereinafter more fully described.

In the drawings, wherein I have shown several forms of the invention—

Figure 1 is an elevational view of the preferred construction, some of the parts being shown in section;

Fig. 2 is a plan view of Fig. 1;

Fig. 3 is an end view of the device shown in Fig. 1, looking from right to left, and showing the cylinder in its upright position after having received a billet;

Fig. 4 is a view similar to Fig. 3, but showing the cylinder in its horizontal position just after the discharge of the billet;

Figs. 5 and 5[a] are, respectively, a perspective view and a section of a suitable pad or cushion for the bottom of a receiver; and

Fig. 6 is a side elevation showing a modification in which the movements of the receiver are controlled by air pressure.

Referring, first, to Figs. 1 to 4: Let A indicate the upper part of a bosh or pit, a section of the wall of which is shown at B. The bosh is normally filled with water up to a level represented by the line C. Well below the surface of the water is a conveyor D, which is usually in the form of an endless steel apron, which travels at right angles to the plane of Fig. 1. When the present invention is used in connection with a casting wheel, the latter will have a discharge point which is indicated by the mold X, the billet

E being discharged endwise from the individual molds at such delivery point.

Referring, now, to Fig. 1: It will be seen that the billet E is shown as resting within the receiver F, the lower end of which has a bracket G which turns about a pivot H mounted in a framework I. This method of moving permits the receiver F to move from the full-line position of Fig. 1 to the horizontal position shown in dash-and-dotted lines.

As best shown in Fig. 2, the receiver is shown as a cylinder formed in two longitudinal halves F^1, F^2, which are hinged at their left-hand or rear sides, as shown at J. The hinges are connected with a T-beam K, extending vertically and connected with the bracket G, so that the sections F^1, F^2 of the cylinder may open and close while continuously supported by the beam K, which beam moves with the cylinder in the operation of the device.

There is no attempt to make the joint between the bottom F^3 and the sides F^1, F^2 of the cylinder water-tight, nor to make the vertical joints of the two halves of the cylinder of a similar tightness; it being desired that the water of the bosh shall have a comparatively easy ingress to the interior of the cylinder, while at the same time oppose a serious resistance to a quick outflow. When the billet E drops endwise from the mold into the upper part of the cylinder, it immediately strikes the bosh water which is under semi-confinement in the cylinder and which acts to cushion the dropping movement of the billet. The displaced water can flow upwardly around the billet and out through the joints of the cylinder, but it is sufficiently impeded in its movement to cushion the billet to a certain extent. The bottom of the cylinder may be provided with a wooden block, or blocks, or with a pad,—such as L, shown in detail in Figs. 5 and 5^a,—or with any other sort of a cushion which may be desired, for receiving the lower end of the billet and overcoming the slight shock which would be incident to metal contact. The cylinder should be kept in a substantially closed position while it is being tilted from the vertical to the horizontal position shown in Fig. 4. A very simple and effective means for accomplishing this consists of a pair of guard rails M, M', which are placed just far enough apart to maintain the two sides of the cylinder in closed position while the cylinder is upright and to hold them in such position until just before the final delivery of the casting to the conveyor. The delivery position is best illustrated in Fig. 4, which figure illustrates the mode of operation preferred in the release of the billet from the cylinder. It will be noted in this figure that guard rails M, M' terminate above the unloading position, so that the cylinder escapes their control shortly above the conveyor. As soon as this control is absent, the weight of the billet causes the cylinder to open by forcing its two sides outwardly, permitting the billet to drop the short remaining distance to the elevator. When the billet is released, it requires only an upward movement of the cylinder until its sides contact with the guard rails to close the cylinder and to hold it closed until the end of the next operation.

It is desirable, of course, that the cylinder with its load shall not acquire any deleterious momentum as it tilts from its vertical to its horizontal position. Figs. 1 to 4 show one means for effecting this. In these figures the pivot H around which the cylinder moves is offset to one side of the cylinder, so that the latter tends to drop sidewise to the horizontal position. This dropping motion is counteracted to a certain extent by the counterweight O affixed to the bracket by arm G'. Normally the counterweight is sufficient so as to initiate a state approaching balance with the loaded cylinder, just permitting the cylinder to tilt to its side without acquiring any considerable momentum. In this operation the cylinder and its load are impeded, of course, to a greater extent by the bosh water than is the counterweight O. When the billet is released, however, the counterweight,—starting from its dash position in Fig. 1,—immediately moves the cylinder toward the vertical position. At the beginning of this operation, the weight is extended at its most effective point, so that the cylinder is easily closed and moved upwardly toward its vertical position. As the vertical position is neared, however, the weight becomes less and less effective, so that there is no undue shock at the top of the stroke. Any desired cushioning means—such as a cushion R—can be employed at this point. Preferably, a second set of guard rails P, P' are provided, against which the bottom of the cylinder rides, so that the parts of the cylinder are kept closed both at the top and at the bottom.

The construction of cylinder shown in Fig. 2,—wherein sections F^1, F^2 are not truly semi-cylindrical, but have more or less tangential parts Q, Q',—facilitates the dropping of the billet from the cylinder at the end of the drop and also introduces a certain element of friction between the cylinder halves and the several guard rails, as the billet exercises a slight wedging operation when it moves toward the horizontal position.

In Fig. 6 I have shown a somewhat modified construction in which the movements of the receiver are controlled by compressed air or the like. This figure in the main follows the construction already described, except that the counterweight O is omitted, there being substituted therefor a counterweight O^5, which is connected with the receiver at the point O^6 by a cable system O^7, O^8. Inserted in this cable system is a double-ended piston rod S, which passes through a stationary cylinder T from end to end. On the piston rod S is mounted a piston U. As the receiver swings from its vertical to its horizontal position and again to its vertical, the piston traverses the cylinder, the proportion of the parts being such as to secure this result. This arrangement may be regarded as a dash-pot for controlling the movements of the receiver. When the casting is in the receiver, the counterweight is much over-balanced; while after the casting is released from the receiver, the latter is much over-balanced by the counterweight. Any suitable combination of retarding effects may be introduced by means of this dash-pot arrangement. In the construction shown an ordinary speed box is provided on the cylinder, by means of which different orifices are provided for the escape of air as the piston moves from the left to the right in Fig. 6. Preferably I provide a compressed air intake V which leads to a suitable source of compressed air, a check-valve W being placed in the line to control the air pressure at the right-hand of the piston. The preferred operation is such that the receiver tilts rapidly until the casting is wholly immersed, and then more slowly, so that the casting has time to cool off and harden to a considerable extent before it is released, thus rendering it less likely to be dented as it comes in contact with the steel conveyor when discharged

from the receiver. This control system is given as an example, since many other types of control can be utilized.

In either of the constructions shown it is desirable to interpose some form of cushion between the metal bottom of the receiver and the casting, on which the latter may drop. In Fig. 1 I have shown a hardwood block L, which is sufficient; though I may provide a pad, such as shown at L' in Figs. 5 and 5a. This pad comprises a multiplicity of short lengths of rope *x*, which are held together by a band *y*. Such a pad may be held in place on the bottom plate F3, for instance (Fig. 5a), by short bolts *z*, *z*, the heads of which are imbedded in the pad L and the shanks of which pass through the bottom plate and are engaged by suitable nuts.

While I have shown and described several forms of the invention, it will be understood that I do not wish to be limited thereto, since various modifications may be made therein without departing from the spirit of the invention.

What I claim is:

1. The combination of a bosh or pit having liquid therein, and a receiver for receiving the castings falling in such bosh, said receiver being mounted at least in part below the liquid level and having means for admitting thereto liquid from the bosh, the proportions of the receiver and casting being such that as the casting enters the receiver, the displacement of liquid from the receiver will be sufficiently retarded to materially cushion the fall of the casting.

2. The combination of a bosh or pit having liquid therein, and a receiver for receiving the castings falling in such bosh, said receiver being mounted at least in part below the liquid level and having means for admitting thereto liquid from the bosh, the proportions of the receiver and casting being such that as the casting enters the receiver, the displacement of liquid from the receiver will be sufficiently retarded to materially cushion the fall of the casting, said receiver being mounted for turning toward a horizontal position to discharge the casting and having a movable side through which the casting is discharged.

3. A receiving device for castings, comprising two hinged parts, a tilting member to which such parts are hinged, said receiving device being pivoted to turn from a vertical to a horizontal position, and rails in slidable engagement with said hinged parts for holding the latter together during such movement.

4. A receiving device for castings, comprising two hinged parts, a tilting member to which such parts are hinged, said receiving device being pivoted to turn from a vertical to a substantially horizontal position, and rails extending along opposite sides of the course of such pivotal movement of said receiving device and adapted to engage the said hinged parts and hold them together during a substantial part of such movement, said receiver being adapted to pass below said rails, whereby the hinged parts may be opened by the weight of the casting, and means for restoring the receiver to a vertical position, said rails acting to close said hinged parts during the last-mentioned movement.

5. A receiver for castings, comprising two hinged parts, a member to which such parts are hinged, a pivot for said receiver located at the lower part thereof and permitting the receiver to tilt toward a horizontal position, and a counterweight for said receiver tending to maintain it in a vertical position when empty.

6. A receiver for castings, comprising two hinged parts, a member to which such parts are hinged, a pivot for said receiver located at the lower part thereof and permitting the receiver to tilt toward a horizontal position, and a counterweight for said receiver tending to maintain it in a vertical position when empty, the weights of the receiver, the counterweight, and casting being so proportioned that the casting will overbalance the counterweight and move the receiver to a horizontal position.

7. A receiver for castings, comprising a pivoted member having hinged parts for the release of the casting, said receiver being adapted to move about its pivot from a vertical toward a horizontal position, rails in slidable engagement with said hinged parts for holding the latter closed during a portion of such movement against the tendency of the hinged parts to open under the weight of the casting, thereby frictionally retarding said receiver.

8. A receiver for castings, comprising hinged members forming a space therewithin for a casting, and being pivoted to move from a vertical to a horizontal position, a counterweight tending to maintain said receiver in its vertical position, and means for controlling the movements of such receiver, the said hinged members being adapted to turn on their hinges when the receiver is in a horizontal position, whereby to discharge the casting from the receiver.

9. The method of handling a casting which comprises dropping said casting substantially endwisely from a mold into a substantially closed receiver which contains liquid and is at least partially submerged in liquid, then turning the receiver by gravity toward a more nearly horizontal position and opening said receiver to discharge the casting therefrom, liquid in the receiver being sufficiently confined therewithin to cushion the fall of the casting into the receiver and liquid in which the receiver is submerged offering resistance to the gravitation of the receiver whereby to cushion its turning movement.

WILLIAM F. EPPENSTEINER.