April 15, 1952 W. L. PERRY 2,592,599

WINDING MACHINE

Filed Feb. 24, 1950 7 Sheets-Sheet 1

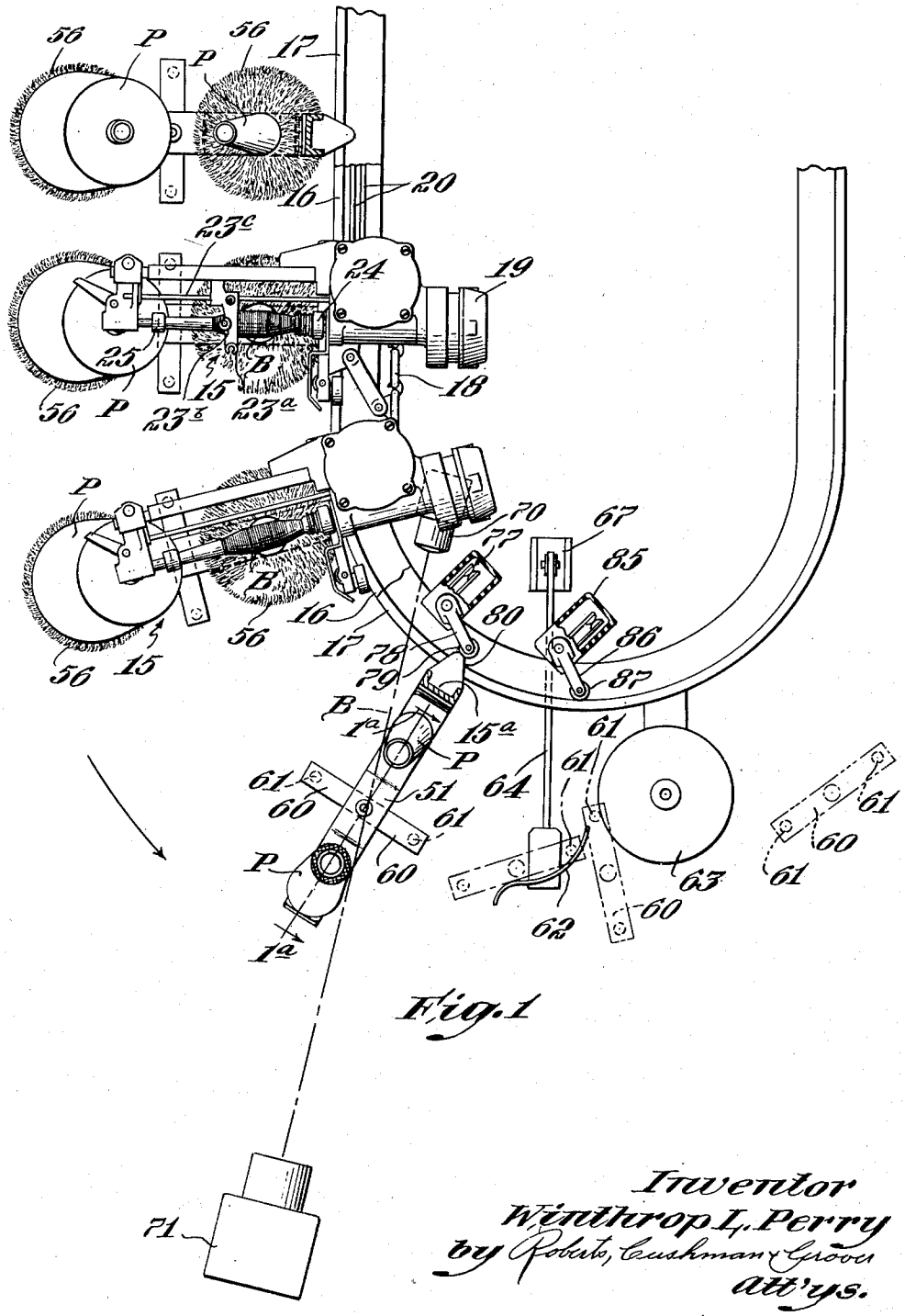

Fig. 1

Inventor
Winthrop L. Perry
by Roberts, Cushman & Groos
Att'ys.

April 15, 1952 W. L. PERRY 2,592,599

WINDING MACHINE

Filed Feb. 24, 1950 7 Sheets-Sheet 2

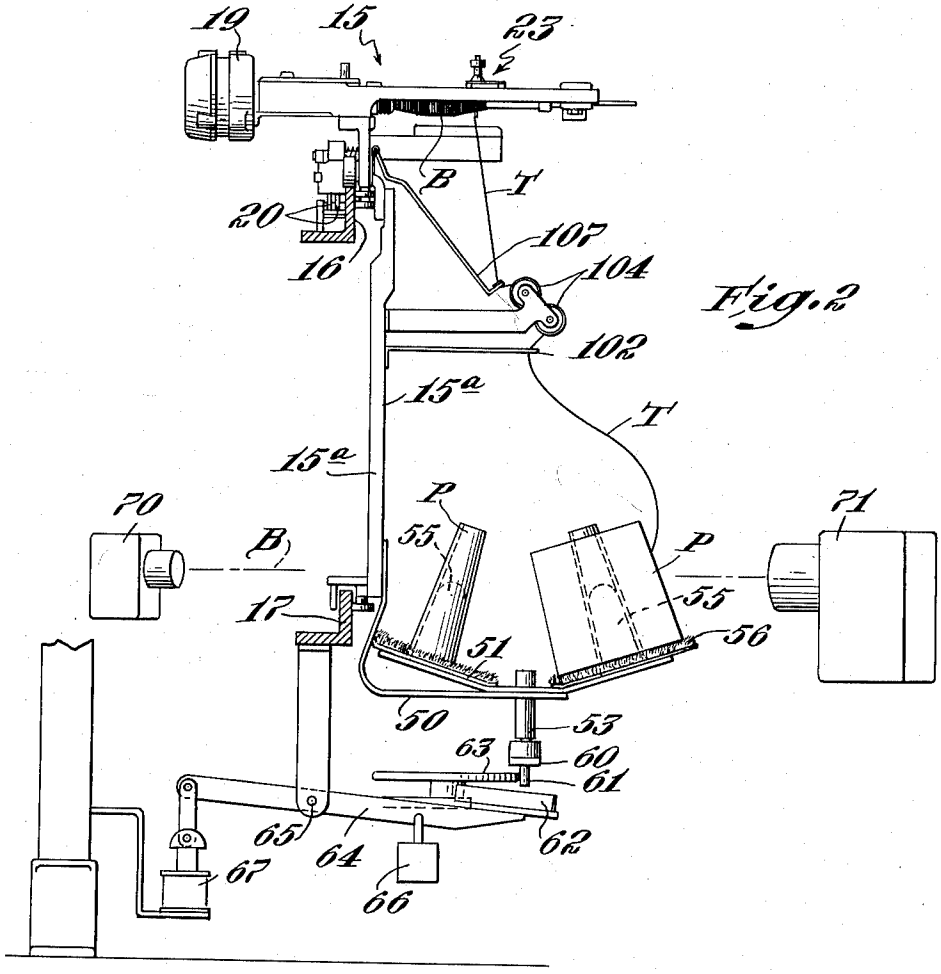

Fig. 2

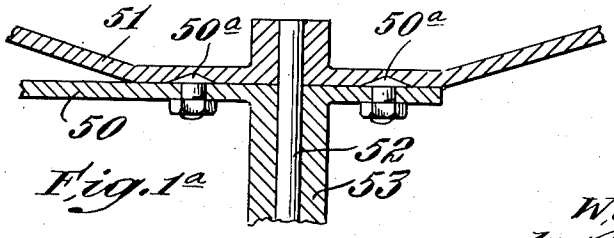

Fig. 1a

Inventor
Winthrop L. Perry
by Pobuts, Cushman & Groves
att'ys.

April 15, 1952 W. L. PERRY 2,592,599

WINDING MACHINE

Filed Feb. 24, 1950 7 Sheets-Sheet 3

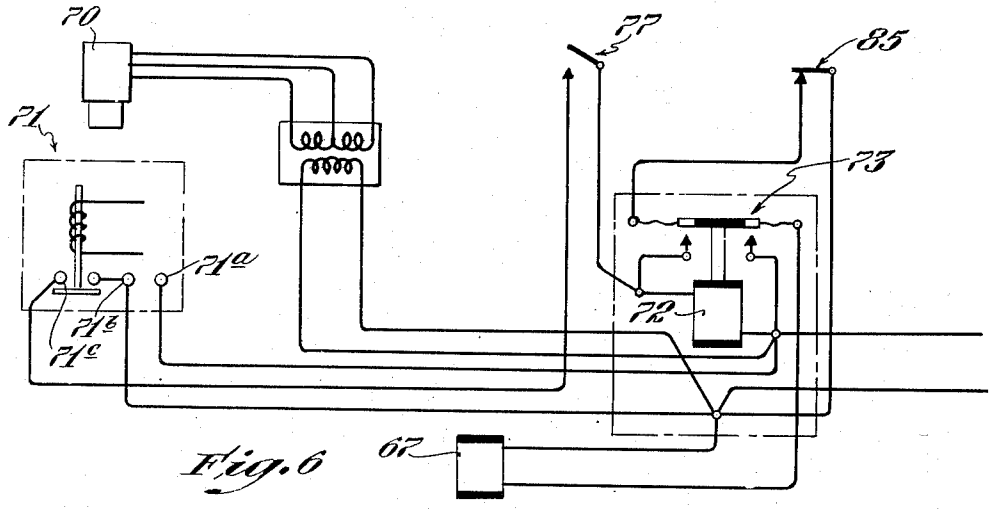

Fig. 6

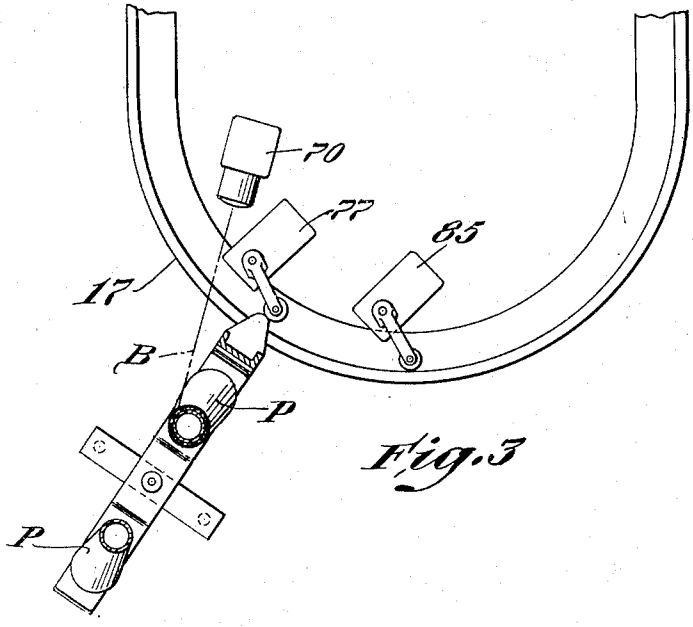

Fig. 3

Inventor
Winthrop L. Perry
by Roberts, Cushman & Groon
Atty's.

April 15, 1952 W. L. PERRY 2,592,599

WINDING MACHINE

Filed Feb. 24, 1950 7 Sheets-Sheet 4

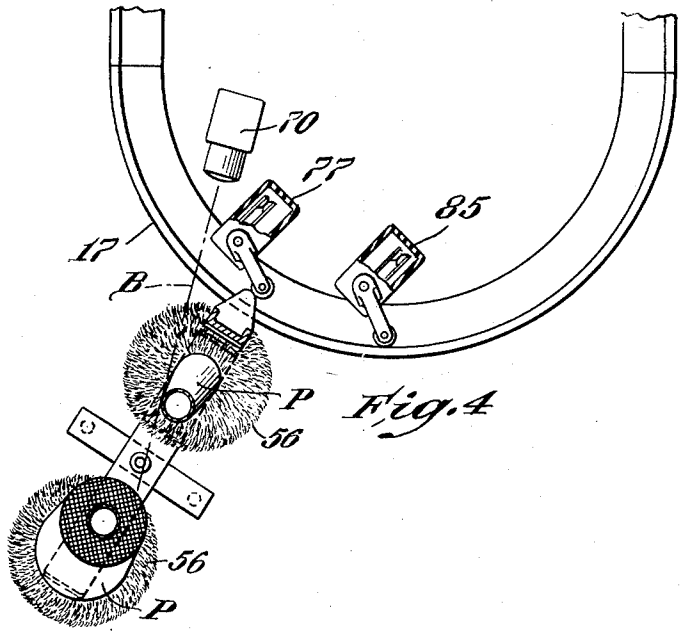

Fig. 4

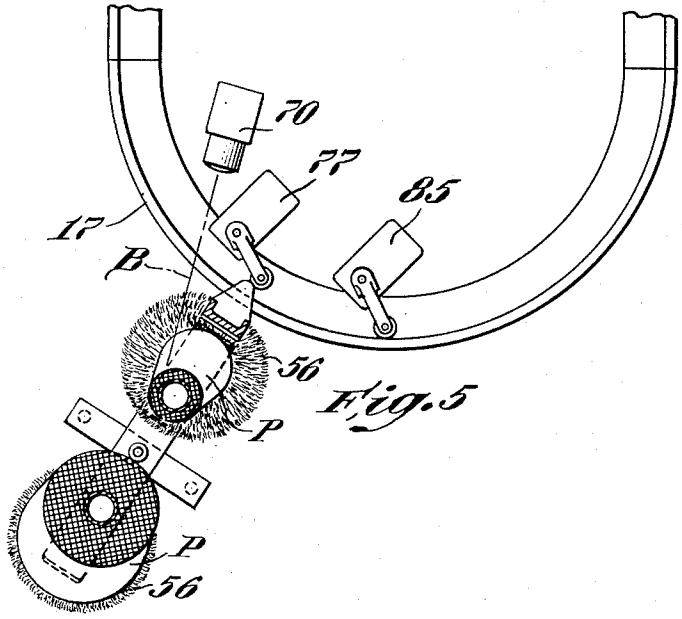

Fig. 5

Inventor
Winthrop L. Perry
by Roberts, Cushman & Grover
Att'ys.

April 15, 1952 W. L. PERRY 2,592,599

WINDING MACHINE

Filed Feb. 24, 1950 7 Sheets-Sheet 5

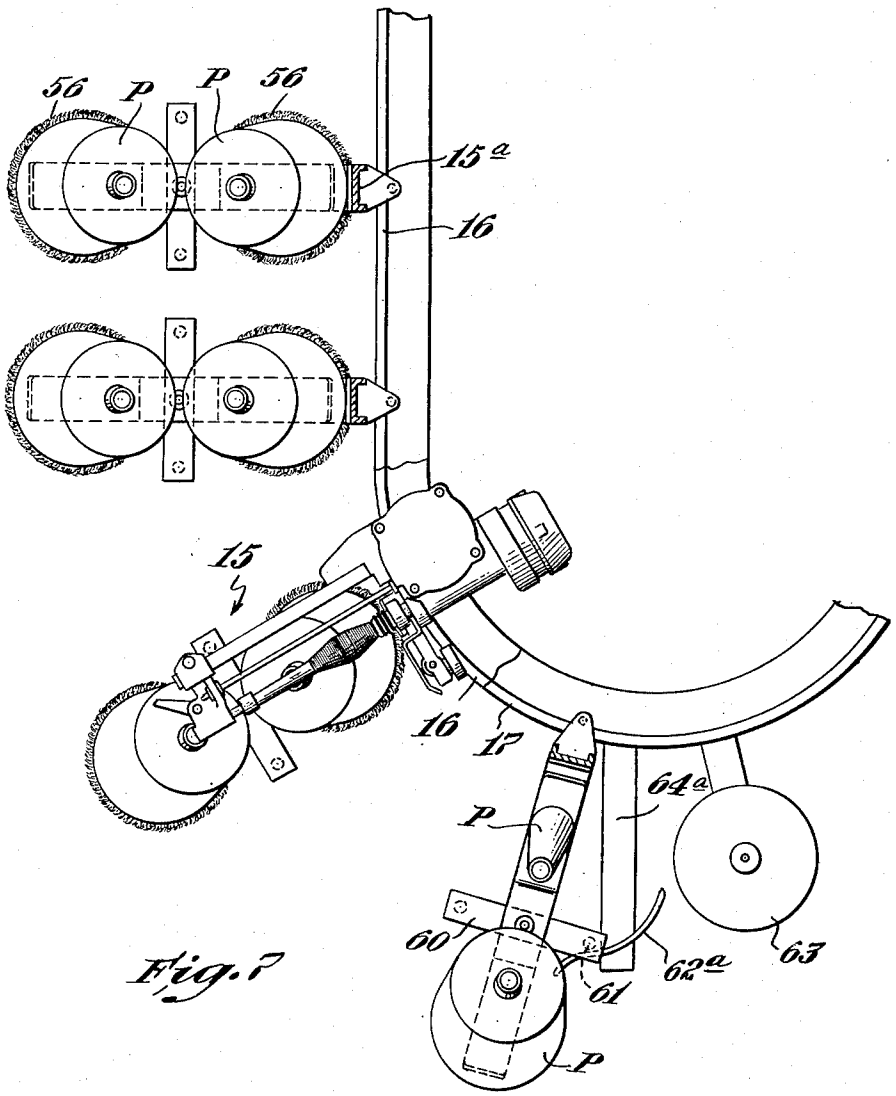

Fig. 7

Inventor
Winthrop L. Perry
by Roberts, Cushman & Grover
Att'ys.

April 15, 1952 W. L. PERRY 2,592,599

WINDING MACHINE

Filed Feb. 24, 1950 7 Sheets-Sheet 6

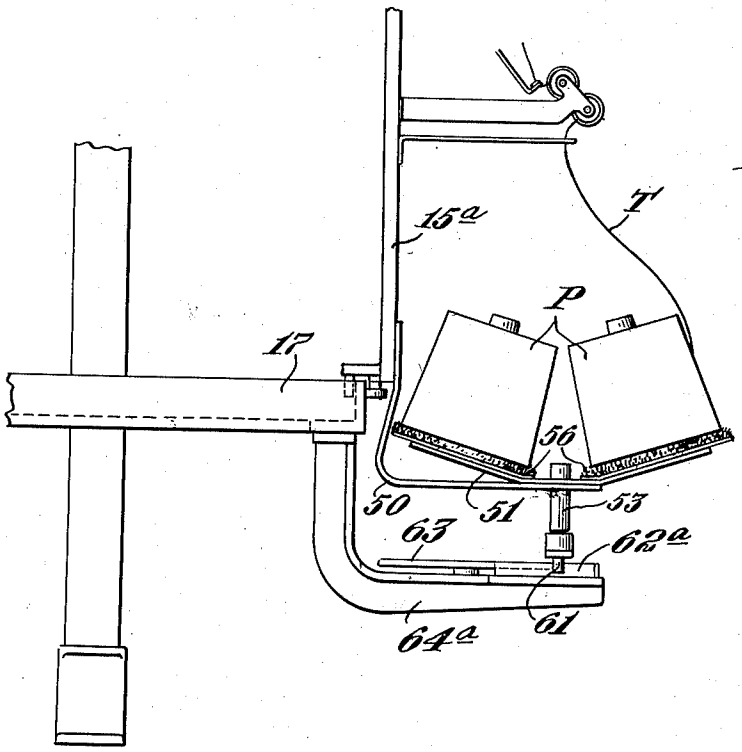

Fig. 8

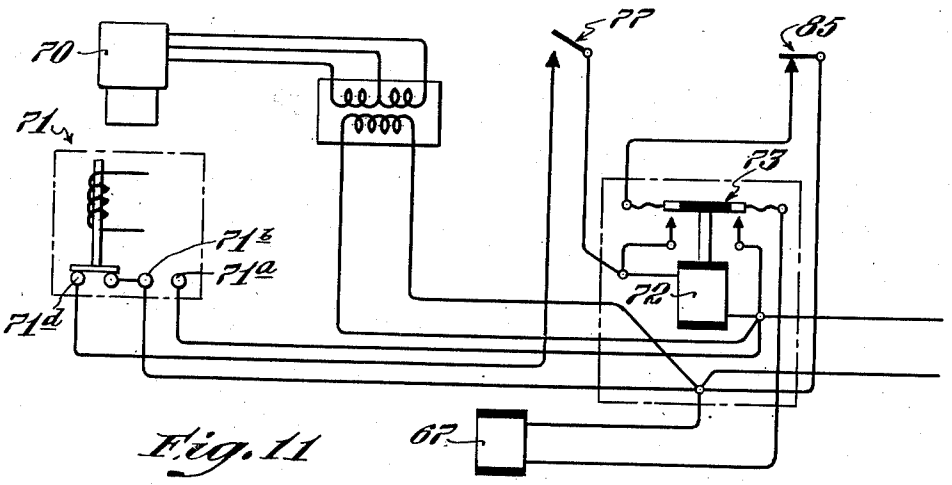

Fig. 11

Inventor
Winthrop L. Perry
by Roberts, Cushman & Groves
att'ys.

April 15, 1952 W. L. PERRY 2,592,599

WINDING MACHINE

Filed Feb. 24, 1950 7 Sheets-Sheet 7

Fig. 9

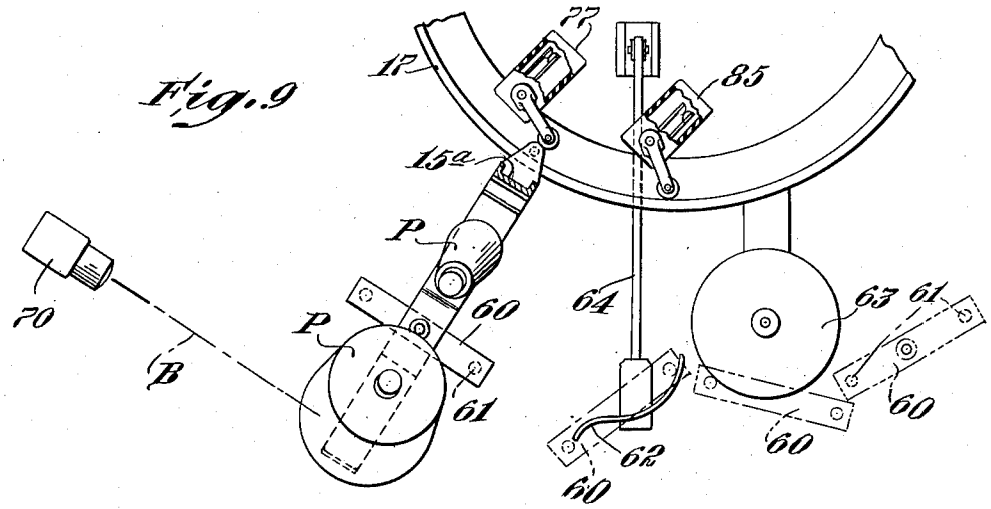

Fig. 10

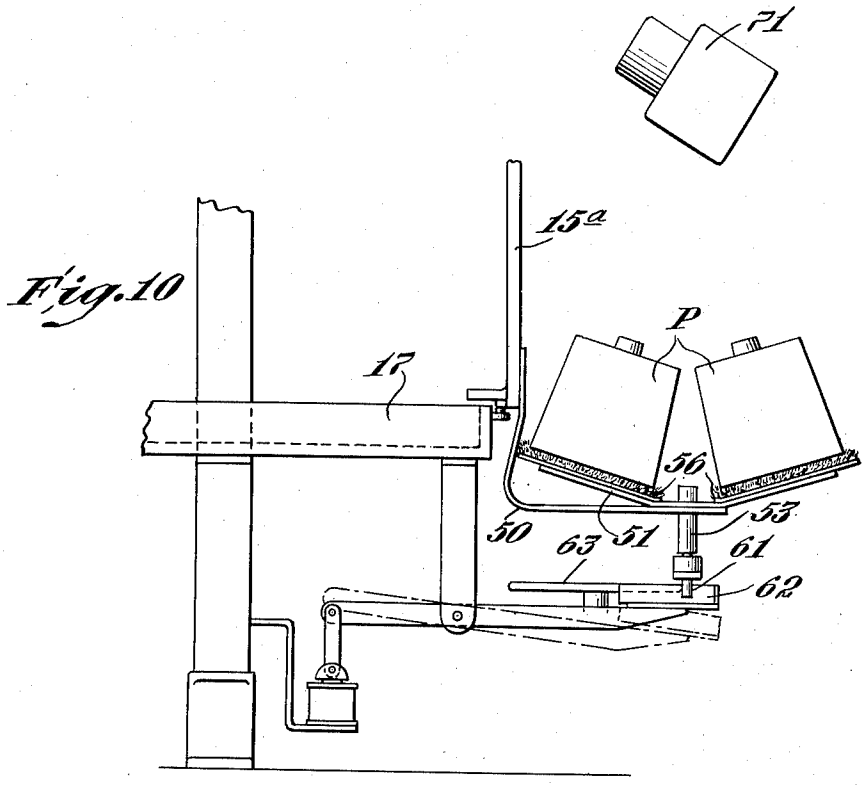

Inventor
Winthrop L. Perry
by Roberts, Cushman & Grover
Att'ys.

Patented Apr. 15, 1952

2,592,599

UNITED STATES PATENT OFFICE

2,592,599

WINDING MACHINE

Winthrop L. Perry, Milford, N. H., assignor, by mesne assignments, to Abbott Worsted Mills, Incorporated, Wilton, N. H., a corporation of New Hampshire

Application February 24, 1950, Serial No. 146,022

33 Claims. (Cl. 242—32)

1

This invention relates generally to the "magazining" of supply packages in winding machines. In the magazining of supply packages, the tail end of thread of an unwinding supply package is united to the leading end of thread of a new full supply package, and when the supply of thread of the first package is exhausted by unwinding, the unwinding operation transfers to the other package. In due time the then empty supply package is replaced by a new full supply package and the threads similarly united. In this manner the unwinding can be carried on indefinitely, the packages exhausting alternately and the unwinding transferring from one package to the other without loss of the tail end of the supply thread.

One of the principal objects of the invention is to combine the desirable features of compactness of construction and ability to unwind from large magazined supply packages. The invention aims to permit unwinding from the commercially available large wound cones and cheeses of thread which are as large as any that usually serve as non-magazined supply packages in ordinary winding machines, and to accomplish this with a close spacing of the winding units, but without interference between any of the packages, the unwinding threads, or the package supports, or other parts of the winding units.

In securing this compact construction and avoidance of interference, the large packages are best disposed one in front of the other. For convenience one package of the pair will be referred to as being in an outer location or position and the other package of a pair will be referred to as being in an inner location or position, and a package will still be referred to as a package even though it has exhausted. For an exhausted package to be replaced by a new full package, the exhausted package needs to occupy the outer location on its winding unit because the inner location is not readily accessible while a thread extends from the other package, in the outer location, to the winding bobbin. It is accordingly necessary to exchange the positions of the supply packages at least once for every package that is being unwound. In a traveling unit winding machine the invention provides a compactness of construction such that the positions of the supply packages of a winding unit cannot, without interference, be exchanged while the winding unit is traveling along the straight portion of its path; the invention however takes advantage of the spreading apart of the outer portions of the units at a curved end portion of

2

the machine to provide for exchanging the positions of the packages at that place.

The exchange of positions of the packages is preferably effected by a 180° rotation of a package carrier that carries two holders for supply packages.

A further object is to provide for rotating the package holders automatically.

It may sometimes be desirable to rotate all of the package carriers of the winding machine automatically in a regular order regardless of the condition of their packages.

However a further object is to provide for selectively turning the package carriers in accordance with the order of exhaustion of their two packages, so as to insure that after a package is exhausted, then in ample time before the other package of the unit has become exhausted, the unit will have begun to pass the operator's station regularly with its one exhausted package disposed in the outer location and its still unwinding package in the inner location. This aspect of the invention involves the use of mechanism responsive to the order of exhaustion of the two packages of a winding unit, and control of the turning mechanism by such responsive mechanism. That one of the two packages which is first in order of exhaustion can thus be moved into the outer location, or considering movement into the inner location, that one of the two packages which is last in order of exhaustion can be moved into such inner location.

Package size detecting mechanism can afford an indication of the order of exhaustion of the two packages of a unit and can advantageously be employed to control the turning mechanism. Preferred forms of the invention include package size detecting mechanism which involves a light beam and detector and relay mechanism responsive to the light beam, such mechanism being preferred in that it avoids all physical contact with the thread.

Although the selective turning of the package carriers may be performed at various stages of exhaustion of the thread constituting the supply, the selective rotation of the package carriers, in the preferred form of the invention, is delayed until the innermost package has completely exhausted and the outermost package has partially exhausted down at least to a predetermined size. This further contributes to compactness of the machine and ability of the machine to carry large packages since the space required for rotating a package carrier is reduced by the fact that the

package carrier is not rotated while carrying a full package.

Generally, the invention further aims to provide simple, inexpensive structure for use in attaining the above objects, rendering the plan of magazining of supply packages in winding machines economical and practically advantageous.

Other objects of the invention and advantageous features will be apparent from this specification and its accompanying drawings.

In the accompanying drawings:

Fig. 1 is a horizontal view of an end portion of a traveling unit winding machine, with some units omitted, the view being partly in plan, and partly in horizontal section at a level near the base of the machine;

Fig. 1ª is a fragmentary vertical sectional view taken on the line 1ª—1ª of Fig. 1 with some parts omitted, showing the manner in which a rotatable package holder is indexed on its supporting bracket;

Fig. 2 is a diagram in the nature of a left side elevation of the end of the machine of Fig. 1, with certain parts omitted for clarity of illustration, showing a winding unit at the end of the machine;

Figs. 3, 4 and 5 are diagrams in the nature of horizontal sectional views each showing a winding unit at the position of the leading one of the winding units shown in Fig. 1, but with the supply packages of each of these units in different states of exhaustion;

Fig. 6 is a wiring diagram of the apparatus of Figs. 1 to 5;

Figs. 7 and 8 are views similar respectively to Figs. 1 and 2 and show a modified form of apparatus in which the corresponding parts are designated by similar reference characters, the upper part of the winding unit being omitted in Fig. 8;

Figs. 9 and 10 are views similar respectively to Figs. 7 and 8 and show a further modified form of apparatus; and

Fig. 11 is a wiring diagram of the apparatus of Figs. 9 and 10.

The mechanism shown in this application incudes a plurality of winding units adapted to travel around the machine in a closed path comprising straight portions and semi-circular end portions, each such unit being adapted to hold two supply packages with the trailing end of thread of one such package united to the leading end of thread of the other. For compactness the two supply packages are located one inwardly and one outwardly on the winding unit, and the package in the inner location is inaccessible or not readily accessible for replacement by the operator.

The winding machine to which the invention is shown as applied includes a plurality of winding units 15 movable by means of a chain 18 (of which a fragment is shown in Fig. 1) upon tracks consisting of upper and lower rails 16 and 17 respectively, in a closed counterclockwise path of travel having straight side portions and semi-circular end portions as in United States Reissue Patent No. 22,492 and United States Patent No. 2,395,028.

Each traveling unit includes an upright frame element 15ª extending between the rails 16 and 17 with the winding mechanism of the unit carried at the top of the upright element 15ª, and with provision for holding the supply of thread to be rewound near the bottom of the unit.

Each winding unit is preferably individually driven by its own electric motor 19, such motor

deriving its current through the frame of the machine and through suitable brushes contacting with stationary conductor bars 20 so as to wind thread onto an individual bobbin B as the winding unit travels around the machine. The conductor bars 20 extend completely around the machine excepting along a part of the straight path at the right hand side of the machine as viewed in Fig. 1, at which place the mechanism for changing the winding bobbin B is located and the conductor bars are omitted.

The thread T runs upwardly to the winding bobbin B through a suitable thread guide 102 (Fig. 2) and tension devices 104, 104 and beneath the outer hooked end of a swinging thread detector wire 107, to a traversing thread guide assembly 23. At the thread guide assembly 23 the thread T passes through an outer thread guide eye 23ª (Fig. 1) and thence over and down through an inner thread guide eye 23ᵇ onto the winding bobbin B.

The bobbin B is held between inner and outer chucks or rotatable hollow centers 24 and 25, the inner center 24 being rotated by the motor 19 to rotate the bobbin.

The thread guide assembly 23 is preferably frictionally mounted for sliding movement upon a traverse rod 23ᶜ which is reciprocated with a short stroke of traverse by suitable traverse cam and linkage connections from the motor 19. During the winding of the bobbin the thread guide assembly 23 is progressively advanced along the rod 23ᶜ, from the base of the bobbin toward the tip, for instance by feeler mechanism such as disclosed in United States Patent No. 2,377,367 or by stationary guide mechanism which reacts on the thread guide assembly of the traveling winding unit as disclosed in United States Patent No. 2,362,455. In either case the progressive shifting of the zone of traverse of the thread guide assembly 23 from near the base of the bobbin to near the tip of the bobbin provides the filling type of winding on the bobbin.

A bracket 50 is provided at the lower end of upright frame element 15ª, and a rotatable package carrier 51 is secured to a vertical shaft 52 which is rotatable in a sleeve 53 extending down from the bracket 50.

The rotatable package carrier 51 is provided with two package holders 55 each adapted to hold an unwinding supply package P shown as consisting of a hollow paper cone carrying several pounds of thread. The carrier 51 has upwardly bent lateral portions which hold the two package holders 55 at angles such that their axes and the axes of the packages P are both directed approximately toward the same point adjacent to the thread guide 102.

In unwinding synthetic filaments such as rayon it is desirable for the base end of the supply package to rest on a soft pad of somewhat larger diameter than the largest diameter of the package, in order to prevent the filament or thread from slipping down beneath the base of the package when the package is not unwinding. Accordingly the package carriers are shown as including pads 56, which may be of sheepskin or soft rubber, beneath and extending out beyond the largest diameter of the packages. Illustration of these pads 56 is omitted in certain places in the drawings, for clarity of illustration.

The thread T will be withdrawn from one of the supply packages P on one of the holders 55 until that package is exhausted. Then, because the tail end of thread of that package has pre-

viously been tied to the leading end of thread of the other supply package, the unwinding will transfer over to the other supply package on the winding unit. In the unit shown in Fig. 2, this transfer has taken place and the thread is now unwinding from the outer package P, the inner package being empty.

The package carrier 51 is displaceably indexed in a position in which it normally extends inwardly toward and outwardly, perpendicularly to the track of the machine, with one of its packages being located inwardly and the other package being located outwardly. As shown in Fig. 1a, conical points 50a extend up from the supporting bracket 50 and engage in corresponding recesses in the package carrier 51, yieldingly holding the package carrier indexed as in Fig. 1. A light pressure can rotate the package carrier out of this interengagement with points 50a, and upon 180° rotation the package carrier is similarly indexed, now with its two packages reversed as to location.

It is desired to accommodate as large sized supply packages as possible on the winding unit, and also to have the several winding units as close together as possible, and with this in view the package carriers are so compactly disposed that they cannot in practice be rotated to reverse the positions of their packages during travel along a straight portion of the path. It will be seen that while a winding unit is traveling along a long straight portion of the track, its package carrier could not be rotated through 180° because of interference with the adjacent winding unit. In addition to collision of package carriers and packages of adjacent units, there would also be likelihood of interference with the winding balloons of thread coming off the supply packages.

However advantage is taken of the spreading apart of the winding units as they pass around the curved end of the machine to provide space for such rotation of a package carrier without such interference. Thus there is ample room for rotation of a package carrier at the curved end of the machine to reverse the locations of its packages, as will be evident from Fig. 1.

The invention will first be explained by reference to its preferred embodiment in which the package carriers are rotated selectively in accordance with the condition of their packages as to exhaustion, to insure that in ample time before the exhaustion of both packages the winding unit will regularly and consistently have an exhausted package disposed outwardly as it passes the operator's station, and so that the winding unit can if necessary pass the operator's station in this condition several times before exhaustion of the then inner package. The preferred embodiment of the invention also includes the feature that the less exhausted package, last in the order of exhaustion of the two packages, and moved from the outer to the inner position, is not so moved until it has partially exhausted down at least to a predetermined size.

A double crank arm 60 is secured to the lower end of shaft 52 and carries vertical cam follower pins 61 at each end. The leading one of the cam follower pins 61 of the winding unit is adapted to engage and be deflected by a non-traveling cam 62, Figs. 1 and 2, with the effect of swinging the double crank 60 and the package carrier 51 through the first approximately 90° of rotation. At the end of this much of the rotation, the follower pin 61 which has followed along the surface of the cam 62 meets the periphery of a freely rotatable roller 63 and follows the surface of this roller for the second approximately 90° of rotation, thus completing the 180° rotation of the package carrier 51 and reversing the positions of its two packages. Successive positions of the double crank 60 and its pins 61, in this rotation, are shown in broken lines in Fig. 1.

Where, as in the preferred form of the invention, the rotation of the package carriers is selective, the cam 62 is normally inactive, being mounted on the end of a lever 64 which is pivoted at 65 and normally held down below the path of the cam follower pins 61 by a weight 66. A solenoid 67 is adapted to tilt the lever 64 to carry the cam 62 up into position to engage an approaching cam follower pin 61.

An advantage of using separate members such as the cam 62 and wheel 63 to cause the 180° rotations of the package carriers instead of employing a single cam in place of the cam 62 and wheel 63, is that only the first one of these members need be moved up and down into and out of the path of the cam follower pins 61 in controlling the rotation of the package carriers, that is, the wheel 63 may be mounted at a fixed level. When the cam 62 is in its lower inoperative position where it cannot engage the leading cam follower pin 61 of a winding unit, the cam follower pins of that unit then merely glide by the wheel 63 in their normal path and without causing any rotation of the package carrier. The movable cam 62, can therefore be relatively short in the direction of travel of the units, and can therefore have ample space and time for movement to proper position in between the successive units.

In the preferred form of the invention the swinging of the package carrier is controlled in the first instance by detecting depletion and preferably substantially complete exhaustion of the inner package.

A light source 70, preferably located, as shown in Figs. 1 and 2, inside of the track of the winding machine, is adapted to project its beam B across the path of the packages into a photoelectric receiver and relay 71. The photoelectric receiver and relay 71 in this form of the invention is so connected to the circuit which it controls as to close a gap in such controlled circuit when the light beam B strikes the receiver portion of the receiver and relay. The controlled circuit (Fig. 6) includes an operating coil 72 of a magnetic switch 73, which magnetic switch in turn controls the circuit from the power line to solenoid 67.

Terminals 71a and 71b of the receiver and relay 71 are constantly connected to opposite sides of the line. When a light beam is received by the receiver, the relay connects terminals 71b and 71c. Terminal 71c has a connection leading to the operating coil 72 of the magnetic switch.

The circuit from the terminal 71c of the relay through the operating coil 72 is broken by a normally open timing switch 77 excepting at the time at which a package core, exclusive of thread thereon, in the inner location on a winding unit will have just passed the light beam B. The normally open switch 77, having a spring pressed operating arm 78 carrying a roller 79, is adapted to be closed by its roller 79 being deflected by a projection 80 on a passing winding unit.

Thus at the time at which a package core in the inner position on a winding unit will have just passed the light beam B, the switch 77 will be momentarily closed, thereby putting the operating coil 72 and hence the solenoid 67 under the

control of the beam B and receiver and relay 71. Passage of the light beam B to the receiver and relay 71 causes the magnetic switch 73 to close and the solenoid 67 to be energized, elevating the cam 62 into position to act upon this winding unit to turn its package carrier.

On the other hand, unless the inner package is substantially exhausted the beam cannot pass this inner package at the moment when timing switch 77 is closed, and the above described turning of the package carrier will not take place. In this preferred form of the invention the rotation of the package carrier by the turning mechanism is thus conditioned upon substantial exhaustion of the inner package.

The current flow through the circuit which includes the relay terminal 71c, timing switch 77 and operating coil 72 is only momentary, but closure of the magnetic switch is employed also to establish a holding circuit to maintain the magnetic switch closed and the solenoid 67 energized during the time necessary for the cam 62 to operate. As shown in Figs. 6 and 1, the holding circuit is established through a normally closed switch 85, one of the poles of the magnetic switch, and the operating coil 72.

Normally closed switch 85 is provided with a spring pressed operating arm 86 carrying a roller 87 adapted to be deflected, to open the switch, by the projection 80 on the passing winding unit. Such opening of the switch 85 breaks the holding circuit through the magnetic switch 73, deenergizing the solenoid 67 and allowing the cam 62 to drop to an inactive position after passage of the winding unit.

As a result, a winding unit in the condition of the one shown as passing the beam B in Fig. 1 will have its package carrier rotated, carrying its package which is first in the order of exhaustion, here the inner exhausted package, into the outer location, with the winding unit thus prepared for replenishment by the operator.

The operator may not happen to attend to this particular winding unit on its next passage past the operator on the straight portion of the track, and further it is desirable that the operator should be able to stay away from the machine for extended periods.

Provision is made for allowing this relation of the packages of a unit which is in condition for replenishment (exhausted package outermost, less exhausted package innermost and unwinding) to persist for several passages past the operator's station, unless of course this relation is altered by the operator's replenishing the outer package. For instance Fig. 3 shows the same winding unit which was passing the beam B in Fig. 1 again passing the beam on the next trip around the machine, now with its packages reversed from the position of Fig. 1 and with its unwinding package a little more nearly exhausted than in Fig. 1, it being understood that the operator has for any reason not yet had time to replenish the exhausted package of this winding unit. As now presented in Fig. 3, oppositely from their locations of Fig. 1, the packages of the unit are located consistently with eventual replenishment of the outer package, and no further reversal is required. In this case the inner unwinding package, not yet sufficiently depleted, does not allow the beam B to pass to the receiver and relay 71 at the moment of closure of the switch 77, and the cam 62 accordingly does not turn the package carrier. This same avoidance of reversal of the packages will occur at several further trips of this unit around the machine, so that during these further trips the exhausted package will remain in the outer position, the inner package still unwinding, and the operator can replenish the exhausted package during any one of these trips.

Failure of the beam to pass the inner package does not necessarily mean that the packages may not require a reversal at some future trip, but merely that they do not require reversal at that particular trip. Thus Fig. 5 shows a winding unit in which the inner package is in a condition similar to that of Fig. 3 but the outer package has been replenished, and the light beam is blocked by the incompletely exhausted inner package in this case also. In ample time however before the unit of Fig. 5 requires replenishment, it will attain the condition of Fig. 1 and undergo reversal of its packages, and can then maintain such reversed position, of Fig. 3, during several trips around the machine.

In the preferred form of the invention of Figs. 1 to 6, rotation of the less exhausted outer package into inner position is further conditioned upon such outer package having been depleted to a certain extent. In this form of the invention, movement of a full package from outer to inner location is thus prevented, and the package carrier and lower portion of the winding unit can be so compact that there would not be room for unwinding from a full package in the inner location or not room for unwinding from a full package if the unit carried another full package at the same time. With this form of the invention, the operator is effectively precluded from putting a full package onto a winding unit until the active unwinding package already thereon is quite well along toward exhaustion, because an empty package is not presented in the outer position until that time.

Referring to Fig. 4, the direction of the light beam and its relation to the package holders on a passing winding unit at the moment of closure of the switch 77 is such that even though the inner package is completely exhausted, the beam will still be intercepted by an active unwinding outer package which has not been unwound down to a predetermined size. The outer package of Fig. 4 has not been sufficiently depleted to allow the beam to pass, with the result that the package carrier of this unit will not be turned. As compared to this, the outer package passing the beam in Fig. 1 has been depleted to a predetermined extent and will allow the beam to pass and cause the package carrier to be rotated.

It will be observed that in the preferred form of the invention, operation of the turning mechanism is conditioned upon the combination of substantially complete exhaustion of the inner package and partial exhaustion of the outer package. The preferred arrangement of the beam B for this purpose is for the beam, as in Fig. 1, to cross the line between the axes of the two packages at a point slightly inward of the axis of rotation of the package holder when the turning mechanism is under the control of the receiver, the beam being close enough to the inner package core to be obstructed by any substantial amount of thread thereon, but being farther away from the outer package core so as to pass the outer package even though it still contains a substantial amount of thread.

While the invention is most advantageously embodied in its preferred form, some of the advantages of the invention are obtainable with somewhat simplified constructions.

As shown in Figs. 7 and 8, a cam 62a similar to the cam 62 can permanently be held in operating position by a fixed bracket 64a, so that the package carrier of every winding unit is turned in regular order, irrespective of the condition of its packages. With this simplified structure, the package holders and lower portions of the winding unit will require somewhat more space than in the preferred form of the invention, because a full package will in some cases be swung from the outer to the inner location and there must be room for such full package in the inner location. There should also be room for the winding unit to accommodate two full packages at the same time, because with a full or substantially full package in the inner location the operator may for her convenience place a full package in the outer location, that is, replenish the winding unit a considerable time before it needs replenishment.

With the package carriers rotated in regular order as in Figs. 7 and 8, without regard to the condition of the packages, there is no assurance that an exhausted package passing the operator's station along the straight portion of the track will be in the outer location at a particular single passage. However if such exhausted package passes the operator in the inaccessible inner location at one passage, it will pass the operator in the accessible outer location at the next succeeding passage, still in ample time for replenishment before the inner package exhausts.

The turning of the package carrier has been discussed above as related to subsequent replenishment of an exhausted package, but this turning may also be regarded as an operation that is performed following replenishment of a package, because it follows that after replenishment of one package of a unit, the other package will in due time need replenishment and will need to be in the outer location. Some of the advantages of the invention can be secured if movement of the less exhausted outer package into inner location takes place when such outer package is still full, for instance, recently put onto the unit and not yet unwound from at all. It will be observed that as soon as a full package has been placed in the outer location and united to the tail of the thread of the inner package, the packages are located contrary to the order of exhaustion of the inner and outer packages which will eventually be desired for the next reprenishment; automatic turning mechanism can be used to correct this positioning without necessarily waiting for complete exhaustion of the inner package and partial exhaustion of the outer package as in the preferred form of apparatus of Figs. 1 to 6. Thus the delay in turning represented in Figs. 5 and 4 may be omitted. Thus in the form of the invention shown in Figs. 9, 10 and 11, the operations of putting the packages of a winding unit into proper relation for eventual replenishment can be begun as soon as a new full package in the outer location reaches the detecting mechanism. With this construction, similarly to the construction of Figs. 7 and 8, sufficient space is provided so that a full package can occupy the inner location and so that the winding unit can accommodate two full packages at the same time. With this construction of Figs. 9 to 11, the condition of the inner package can be ignored by the detecting mechanism.

As shown in Figs. 9 and 10, the light source 70, located outside of the track of the winding machine, is adapted to project its beam B across the outer portion of the path of full packages in the outer location and into a photoelectric receiver and relay 71. This photoelectric receiver and relay may be the same commercial form of receiver and relay as employed at 71 in the apparatus of Figs. 1 to 6, but makes use of different connections, in known manner, so as to close a gap in the controlled circuit when the light beam B fails to strike the receiver portion of the receiver and relay.

Thus the receiver and relay 71 may have both a set of normally closed relay contacts and a set of normally open relay contacts, and as used in Figs. 9 to 11 may merely make use of different exterior terminals to connect the controlled circuit to relay contacts which are closed in the absence of reception of the light beam, instead of connecting the controlled circuit to relay contacts which are open in the absence of reception of the light beam as in Figs. 1 to 6.

The path of the light beam B is such that a full or nearly full package in the outer location intercepts the beam B, causing the solenoid 67 to be energized to elevate the cam 62 into position to act upon the winding unit to rotate its package carrier.

The electrical connections shown in the diagram of Fig. 11 are all similar to those explained in connection with Figs. 1 to 5 with the exception that the circuit controlling the operating coil 72 is connected at the photoelectric receiver and relay to terminals 71b and 71d which are closed when the light beam B fails to strike the receiver. When the normally open switch 77 is closed by the passing winding unit and, as in Fig. 9, the beam is interrupted by the outer package, the circuit through the operating coil 72 is closed, closing magnetic switch 73, energizing solenoid 67 and elevating cam 62. The circuit through operating coil 72 is held by a holding circuit including the normally closed switch 85, long enough for cam 62 to operate, in the same manner as in Figs. 1 to 6.

Although the light beam B could be arranged in Fig. 9 so that it would only be interrupted by the largest diameter package to be used as a supply package on the machine, it is preferable for beam B to pass somewhat nearer to the axis of the package and be interrupted by packages of somewhat lesser size, so that the detecting mechanism can still operate effectively if packages somewhat smaller than standard size are employed. As shown, any package in the outer location having a size of at least about ⅔ the maximum size will operate the detector.

In the normal operation of the apparatus of Figs. 9 to 11, a new full package, placed on the winding unit in the outer location, will operate the detecting mechanism and cause the cam 62 to rotate the package carrier of that winding unit, carrying the full inactive package, which is last in order of exhaustion, to the inner location and the partially exhausted unwinding package to the outer position, positioning the packages for the desired order of exhausting of the two packages.

When, as usual, the active unwinding package thus brought into outer position is, upon next reaching the detecting mechanism, sufficiently nearly exhausted to fail to obstruct the light beam B, the turning mechanism will not be operated and this active unwinding package will remain in the outer location, the unwinding package will then continue to remain outermost

on subsequent passages past the detecting mechanism until it eventually reaches the operator's station in an exhausted condition, and even if the operator then fails to replenish this exhausted package, it will continue to remain in the outer location an indefinite number of trips around the machine until eventually replenished by the operator.

If it happens that the operator should place a full package in the outer location while the inner actively unwinding package is no nearly full that at the second succeeding passage past the detecting mechanism after replenishment the actively unwinding package (then in the outer location) is still large enough to actuate the detecting mechanism, then the package carrier will receive what might be termed an idle rotation, carrying the actively unwinding package back into the inner location. This condition however will automatically correct itself in ample time before any need for replenishment of the winding unit arises, because each such idle rotation will be followed on the next trip by actuation of the detecting machinism by a full inactive package in the outer location, and consequent return of the unwinding package into outer location. An unwinding package in the outer location will eventually become so depleted that it will no longer interrupt the light beam, and the detecting mechanism, in this case by the failure of the beam to be interrupted, will afford an indication of an order of exhaustion of the packages which is appropriate to eventual replenishment of an exhausted package in the outer location.

Thus the last rotation of the package carrier preceding eventual replenishment moves from inner to outer location that package which is first in order of exhaustion. Several trips around the machine may then intervene before this package exhausts, and further trips may then occur before the operator actually performs the replenishment.

Both the apparatus of Figs. 1 to 6 and the apparatus of Figs. 9 to 11 involve the use of detecting mechanism, responsive to the order of exhaustion of the packages, to control the turning mechanism so as to position in the outer location the package which is first in order of exhaustion.

The apparatus of Figs. 1 to 6 works on the basis that passage of the beam to the receiver permits turning of a package carrier, and the turning mechanism is not operated until an indication that the inner package is first in order of exhaustion.

The apparatus of Figs. 9 to 11 works on the similar basis that passage of the beam to the receiver prevents turning of a package carrier, and the turning mechanism is not prevented from operating until an indication that the outer package is first in order of exhaustion.

In both these forms of apparatus the packages are put into the proper relation for replenishment of the outer package and will stay in that relation for several trips around the machine.

It will be understood that it is not necessary that there should be a positive determination of the order of exhaustion of the packages of a winding unit at each presentation of the winding unit to the turning mechanism. It has been explained above how a sufficiently large active package in the outer location of Fig. 4 will intercept the beam and postpone reversal of the packages even though the beam passes by an already exhausted inner package on the unit. And in the apparatus of Figs. 9 to 11, if an active package of a unit is unusually large the detecting mechanism may in effect be temporarily unable to distinguish between the new and old package, and idle rotations of the package holder may occur before the desired relation of the packages is consistently established.

I claim:

1. A winding machine including a plurality of winding units, the machine being constructed for travel of the units in a path comprising opposite straight portions connected by curved end portions, each winding unit being constructed to unwind thread from magazined supply packages and including a rotatable double package carrier for holding two packages, one in an outer and the other in an inner location on the winding unit, and a device arranged at a curved end portion of the path to there rotate a package carrier of a passing unit, to reverse the position of the package carrier.

2. A winding machine including a plurality of winding units, the machine being constructed for travel of the units in a path comprising opposite straight portions connected by curved end portions, each winding unit being constructed to unwind thread from magazined supply packages and including a rotatable double package carrier for holding two packages, one in an outer and the other in an inner location on the winding unit, and cooperating parts associated respectively with the traveling package carriers and with a stationary part of the machine for rotating the package carriers at a curved end portion of the path.

3. A winding machine including a plurality of winding units, the machine being constructed for travel of the units in a path comprising opposite straight portions connected by curved end portions, each winding unit being constructed to unwind thread from magazined supply packages and including a rotatable double package carrier for holding two packages, one in an outer and the other in an inner location of the winding unit, cam followers associated with the respective package carriers, and a cam past which the package carriers move and engageable with said followers to rotate the package carriers at a curved end portion of the path.

4. A winding machine including a plurality of traveling winding units, each winding unit being constructed to unwind thread from magazined supply packages and including a rotatable double package carrier for holding two packages, each package carrier including an element adapted to cause rotation thereof, and the machine including a member movable into and out of the path of said elements for actuating said elements.

5. A winding machine including a plurality of traveling winding units, each winding unit being constructed to unwind thread from magazined supply packages and including a rotatable double package carrier for holding two packages, each package carrier including a crank arm and a cam follower on said arm, and the machine including a cam movable into and out of the path of said cam followers for turning the package carriers.

6. A winding machine including a plurality of traveling winding units, each winding unit being constructed to unwind thread from magazined supply packages and including a rotatable double

package carrier for holding two packages, each package carrier including an element adapted to cause rotation thereof, the machine including a member movable into and out of the path of said elements and adapted to swing said elements out of their normal path and thereby cause a partial reversal of the position of the package carrier, and a member engageable with elements so swung, said last named member being shaped to swing said elements further in the same direction of rotation and restore them to their normal path.

7. A winding machine including a plurality of traveling winding units, each winding unit being constructed to unwind thread from magazined supply packages and including a rotatable double package carrier for holding two packages, each package carrier including an element adapted to cause rotation thereof, the machine including a member movable into and out of the path of said elements and adapted to swing said elements out of their normal path and thereby cause a partial reversal of the position of the package carrier, and a wheel having a surface disposed in the path of elements so swung, said surface of said wheel being adapted to swing said elements further in the same direction of rotation and restore them to their normal path.

8. A winding machine including a plurality of winding units, the machine being constructed for travel of the units in a path comprising opposite straight portions connected by curved end portions, each winding unit being constructed to unwind thread from magazined supply packages and including a rotatable double package carrier for holding two packages, one in an outer and the other in an inner location on the winding unit, and means at a curved end portion of the path acting to there rotate the package carriers of the several winding units in order, to reverse the positions of their package holders, so that an exhausted package on a winding unit will be presented in the outer location, if not following one such reversal then following the next such reversal.

9. A winding machine including a plurality of winding units, the machine being constructed for travel of the units in a path comprising opposite straight portions connected by curved end portions, each winding unit being constructed to unwind thread from magazined supply packages and including a rotatable double package carrier for holding two packages, one in an outer and the other in an inner location on the winding unit, cam followers associated with the respective package carriers, and a cam at a curved end portion of the path acting thereto engage cam followers of the several winding units in order, to reverse the positions of their package carriers, so that an exhausted package on a winding unit will be presented in the outer location, if not following one such reversal then following the next such reversal.

10. A winding machine including a plurality of traveling winding units, each winding unit being constructed to unwind thread for magazined supply packages and including a rotatable double package carrier for holding two packages, each package carrier including two dimetrically opposed cam followers rotatable therewith and positioned relatively to the package holder so that one such cam follower is located generally forwardly and the other cam follower is located generally rearwardly in the path of travel of the winding unit, and the machine including means engageable with the forward such cam follower of a traveling winding unit to cause a reversal of the position of the package carrier.

11. A winding machine including a plurality of winding units each arranged to unwind thread from two magazined supply packages and including a rotatable double package holder for holding such two packages, one in an outer location and the other in an inner location on the winding unit, the packages exhausting alternately and the unwinding transferring from one to the other mechanism responsive to the order of exhaustion of the two such packages of a winding unit, and turning mechanism adapted to turn the package holders of the winding units, said turning mechanism being controlled by said responsive mechanism so as to position in the outer location that one of said two packages which is first in order of exhaustion.

12. A winding machine including a plurality of winding units each arranged to unwind thread from two magazined supply packages and including a rotatable double package holder for holding such two packages, one in an outer location and the other in an inner position on the winding unit, the packages exhausting alternately and the unwinding transferring from one to the other, package size detecting mechanism arranged to afford an indication of the order of exhaustion of the two such packages of a winding unit, and turning mechanism adapted to turn the package holders of the winding units, said turning mechanism being controlled by said size detecting mechanism so as to position in the outer location that one of said two packages which is first in order of exhaustion.

13. A winding machine including a plurality of traveling winding units, the machine being constructed for travel of the units in a path comprising opposite straight portions connected by curved end portions, each winding unit being arranged to unwind thread from two magazined supply packages and including a rotatable double package holder for holding such two packages, one in an outer location and the other in an inner location on the winding unit, the packages exhausting alternately and the unwinding transferring from one to the other, mechanism responsive to the order of exhaustion of the two such packages of a winding unit, and turning mechanism arranged to turn the package holders of the winding units at a curved portion of the path, said turning mechanism being controlled by said responsive mechanism so as to position in the outer location that one of said two packages which is first in order of exhaustion, thereby to present the units in condition for replenishment of the outer package.

14. A winding machine including a plurality of traveling winding units, the machine being constructed for travel of the units in a path comprising opposite straight portions connected by curved end portions, each winding unit being arranged to unwind thread from two magazined supply packages and including a rotatable double package holder for holding such two packages, one in an outer location and the other in an inner location on the winding unit, the packages exhausting alternately and the unwinding transferring from one of the other, package size detecting mechanism arranged to afford an indication of the order of exhaustion of the two such packages of a winding unit, and turning mechanism arranged to turn the package holders of the winding units at a curved portion of the path, said turning mechanism being controlled by said re-

sponsive mechanism so as to position in the outer location that one of said two packages which is first in order of exhaustion, thereby to present the units in condition for replenishment of the outer package.

15. A winding machine including a plurality of winding units arranged to travel around the machine in a path having opposite straight portions connected by curved end portions, each winding unit being constructed to unwind thread from magazined supply packages and including a rotatable double package holder for holding two supply packages, one in an outer and the other in an inner location on the winding unit, package size detecting mechanism arranged to detect the sizes of packages on the traveling winding units, and turning mechanism controlled by the detecting mechanism for rotating the package holders at a curved portion of the path to reverse the locations of the two packages of a unit.

16. A winding machine including a plurality of winding units arranged to travel around the machine in a path having straight and curved portions, each winding unit being constructed to unwind thread from magazined supply packages and including a rotatable double package holder for holding two supply packages, one in an outer and the other in an inner location on the winding unit, the winding units being adapted for replenishment of packages occupying the outer position, and mechanism operating periodically and selectively upon the winding units at a curved portion of the path to arrange their package holders so that their more exhausted packages are in the outer location along a subsequent portion of the path.

17. A winding machine including a plurality of winding units adapted to travel around the machine in a path having straight and curved portions, each winding unit being constructed to unwind thread from magazined supply packages and including a rotatable double package holder for holding two supply packages, one in an outer and the other in an inner position on the winding unit, the winding units being adapted for replenishment of packages occupying the outer position, and turning mechanism operating upon the winding units at a curved portion of the path to reverse their package holders, said turning mechanism being conditioned upon depletion of the package occupying the inner position.

18. A winding machine including a plurality of winding units adapted to travel around the machine in a path having straight and curved portions, each winding unit being constructed to unwind thread from magazined supply packages and including a rotatable double package holder for holding two supply packages, one in an outer and the other in an inner position on the winding unit, the winding units being adapted for replenishment of packages occupying the outer position, and turning mechanism operating upon the winding units at a curved portion of the path to reverse their package holders, said turning mechanism being conditioned upon substantially complete exhaustion of the package occupying the inner position.

19. A winding machine including a plurality of winding units adapted to travel around the machine in a path having straight and curved portions, each winding unit being constructed to unwind thread from magazined supply packages and including a rotatable double package holder for holding two supply packages, one in an outer and the other in an inner position on the winding unit, the winding units being adapted for replenishment of packages occupying the outer position, and turning mechanism operating upon the winding units at a curved portion of the path to reverse their package holders, said turning mechanism being conditioned upon substantially complete exhaustion of the package occupying the inner position and depletion to a certain extent of the package occupying the outer position.

20. A winding machine including a plurality of traveling winding units each arranged to unwind thread from magazined supply packages, each winding unit including a rotatable double package holder for holding two such supply packages, one outermost and the other innermost on the holder, a detector responsive to the condition consisting of exhaustion of the innermost package and partial exhaustion of the outermost package of a winding unit, and turning mechanism controlled by the detector for rotating the package holder of such unit to reverse the locations of its packages in response to such detection.

21. A winding machine including a plurality of winding units adapted to travel around the machine, each winding unit being constructed to unwind thread from magazined supply packages and including a rotatable double package holder for holding two supply packages, one in an outer and the other in an inner position on the winding unit, the packages exhausting alternately and the unwinding transferring from one to the other, mechanism for rotating the package holders of the several winding units, and controlling mechanism for the rotating mechanism including package size detecting mechanism responsive to both packages of a passing winding unit and arranged to respond to substantial exhaustion of the inner package and to a lesser degree of depletion of the outer package to permit the rotating mechanism to reverse the package holder.

22. A winding machine including a plurality of traveling winding units each arranged to unwind thread from two magazined supply packages and including a rotatable double package holder for holding two oppositely positioned packages, the packages exhausting alternately and the unwinding transferring from one to the other, turning mechanism adapted to turn the package holder of a traveling unit to reverse the locations of its packages, package size detecting mechanism past which the winding units travel and responsive to the sizes of the passing packages which occupy one such location on the winding units, said size detecting mechanism actuating the turning mechanism to cause the turning mechanism to reverse the package holder of a winding unit upon detection of a condition of size of a package in such one location thereon upon passage past the detecting mechanism, said size detecting mechanism being ineffective to repeat the actuation of the turning mechanism upon the next following passage of the same unit's previously oppositely located package having a different condition as to exhaustion.

23. A winding machine including a plurality of traveling winding units each arranged to unwind thread from two magazined supply packages and including a rotatable double package holder for holding two oppositely positioned packages, the packages exhausting alternately and the unwinding transferring from one to the other, turning mechanism adapted to turn the package holder of a traveling unit to reverse the locations of its packages, package size detecting mechanism past which the winding units travel

and responsive to substantial exhaustion of the passing packages which occupy one such location on the winding units, said size detecting mechanism actuating the turning mechanism to cause the turning mechanism to reverse the package holder of a winding unit upon detection of a condition of substantial exhaustion of a package in such one position thereon upon passage past the detecting mechanism, said size detecting mechanism being ineffective to repeat the actuation of the turning mechanism upon the next following passage of the same unit's previously oppositely located non-exhausted package.

24. A winding machine including a plurality of traveling winding units each arranged to unwind thread from two magazined supply packages and including a rotatable double package holder for holding two oppositely positioned packages, the packages exhausting alternately and the unwinding transferring from one to the other, turning mechanism adapted to turn the package holder of a traveling unit to reverse the locations of its packages, package size detecting mechanism past which the winding units travel and responsive to the sizes of the passing packages which occupy both such positions on the winding units, said size detecting mechanism actuating the turning mechanism to cause the turning mechanism to reverse the package holder of a winding unit upon detection of the combination of substantially complete exhaustion of a package in one such location thereon and partial less complete exhaustion of its oppositely located package upon passage past the detecting mechanism, said size detecting mechanism being ineffective to repeat the actuation of the turning mechanism upon the next following passage of the same unit with the locations of its packages now reversed.

25. A winding machine including a plurality of winding units adapted to travel around the machine, each winding unit being constructed to wind thread from magazined supply packages and including a rotatable double package holder for holding two supply packages, one in an outer and the other in an inner location on the winding unit, a photoelectric receiver and a light source arranged to project a beam to the receiver along a path adapted to be intercepted by supply packages on the traveling winding units, and turning mechanism controlled by the receiver for rotating the package holder to reverse the locations of the packages.

26. A winding machine including a plurality of winding units adapted to travel around the machine, each winding unit being constructed to wind thread from magazined supply packages and including a rotatable double package holder for holding two supply packages, one in an outer and the other in an inner location on the winding unit, turning mechanism adapted to rotate the package holders of passing winding units to reverse the locations of their packages, controlling mechanism for the turning mechanism including a photoelectric receiver responsive to the size of packages of the traveling winding units, and mechanism for putting the turning mechanism under the control of the photoelectric receiver in timed relation to the passage of winding units past the receiver.

27. A winding machine including a plurality of winding units adapted to travel around the machine, each winding unit being constructed to wind thread from magazined supply packages and including a rotatable double package holder for holding two supply packages, one in an outer and the other in an inner location on the winding unit, turning mechanism adapted to rotate the package holders of passing winding units to reverse the locations of their packages, a photoelectric receiver and a light source arranged to project a beam to the receiver along a path adapted to be intercepted by supply packages on the traveling winding units, and mechanism for putting the turning mechanism under the control of the beam upon passage of a winding unit past the beam.

28. A winding machine including a plurality of winding units adapted to travel around the machine, each winding unit being constructed to wind thread from magazined supply packages and including a rotatable double package holder for holding two supply packages, one in an outer and the other in an inner location on the winding unit, turning mechanism adapted to rotate the package holders of passing winding units to reverse the locations of their packages, controlling mechanism for the turning mechanism including a photoelectric receiver adapted to control the turning mechanism and responsive to the size of packages of the traveling winding units at a point in advance of the turning mechanism, timing mechanism operating in timed relation to the travel of the winding units for putting the turning mechanism under the control of the photoelectric receiver, and mechanism for thereafter holding the turning mechanism operative during passage of a winding unit past the turning mechanism.

29. A winding machine including a plurality of winding units adapted to travel around the machine, each winding unit being constructed to wind thread from magazined supply packages and including a rotatable double package holder for holding two supply packages, one in an outer and the other in an inner location on the winding unit, turning mechanism adapted to rotate the package holders of passing winding units to reverse the locations of their packages, controlling mechanism for the turning mechanism including a photoelectric receiver adapted to control the turning mechanism and responsive to the size of packages of the traveling winding units at a point in advance of the turning mechanism, an electromagnetic connection between the receiver and the turning mechanism, adapted for control of the turning mechanism by the receiver, said connection including a switch operated in timed relation to the travel of the winding units for putting the turning mechanism under the control of the photoelectric receiver through said connection, a holding circuit for thereafter holding the turning mechanism operative during passage of a winding unit past the turning mechanism, and a switch operated in timed relation to the travel of the winding units for rendering the holding circuit ineffective.

30. A winding machine including a plurality of winding units adapted to travel around the machine, each winding unit being constructed to unwind thread from magazined supply packages and including a rotatable double package holder for holding two supply packages, one in an outer and the other in an inner location on the winding unit, mechanism for rotating the package holders of the several winding units to reverse the package holders, and controlling mechanism for the rotating mechanism including a photoelectric receiver and a light source projecting a beam to

the receiver across the paths of the two packages and timing mechanism adapted to put the turning mechanism under the control of the receiver at a time when the two packages are in the region of the beam, said beam being disposed so that when the turning mechanism is under control of the receiver the distance from the beam to the inner package core is less than the distance from the beam to the outer package core, to permit the turning mechanism to be actuated upon the combination of exhaustion of the inner package and partial exhaustion of the outer package.

31. A winding machine including a plurality of winding units adapted to travel around the machine, each winding unit being constructed to wind thread from magazined supply packages and including a rotatable double package holder for holding two supply packages, one in an outer and the other in an inner location on the winding unit, mechanism for rotating the package holders of the several winding units to reverse the package holders, and controlling mechanism for the rotating mechanism including a photoelectric receiver and a light source projecting a beam to the receiver across the paths of the two packages and timing mechanism adapted to put the turning mechanism under the control of the receiver at a time when the two packages are in the region of the beam, said beam being disposed so that when the turning mechanism is under control of the receiver the beam is directed between the two packages so as to detect the sizes of both.

32. A winding machine including a plurality of winding units adapted to travel around the machine, each winding unit being constructed to unwind thread from magazined supply packages and including a rotatable double package holder for holding two supply packages, one in an outer and the other in an inner location on the winding unit, mechanism for rotating the package holders of the several winding units to reverse the package holders, and controlling mechanism for the rotating mechanism including a photoelectric receiver and a light source projecting a beam to the receiver across the paths of the two packages and timing mechanism adapted to put the turning mechanism under the control of the receiver at a time when the two packages are in the region of the beam, said beam being disposed so that when the turning mechanism is under control of the receiver the beam is directed between the axes of the two packages, nearer to the inner package core than to the outer package core.

33. A winding machine including a plurality of winding units adapted to travel around the machine, each winding unit being constructed to wind thread from magazined supply packages and including a rotatable double package holder for holding two supply packages, one in an outer and the other in an inner position, equidistant from the axis of rotation of the package holder, mechanism for rotating the package holders of the several winding units to reverse the package holders, and controlling mechanism for the rotating mechanism including a photoelectric receiver and a light source projecting a beam to the receiver across the paths of the two packages and timing mechanism adapted to put the turning mechanism under the control of the receiver at a time when the two packages are in the region of the beam, said beam being disposed so that when the turning mechanism is under control of the receiver the beam is directed between the two packages to cross the line joining their axes inwardly of the axis of rotation of the package holder.

WINTHROP L. PERRY.

REFERENCES CITED

The following references are of record in the file of this patent:

UNITED STATES PATENTS

Number	Name	Date
1,988,255	Soons	Jan. 15, 1935
2,026,146	Turner	Dec. 31, 1935
2,160,810	Abbott	June 6, 1939
2,466,852	Keith	Apr. 12, 1949