April 17, 1951 J. C. BAGNALL, JR 2,548,930

CUFF LINK WITH TILTING HEAD

Filed Aug. 26, 1948

Fig. 1.

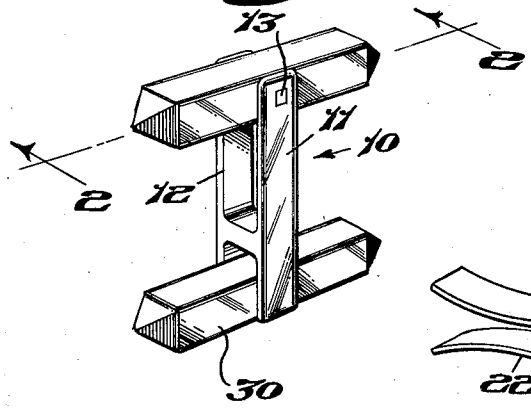

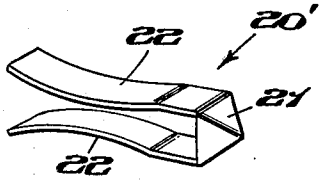

Fig. 7.

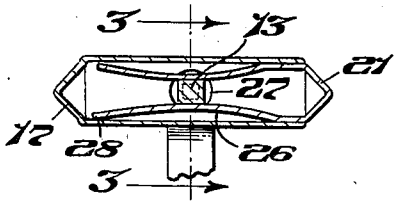

Fig. 2.

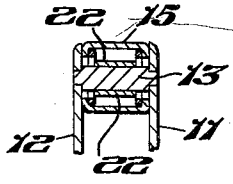

Fig. 3.

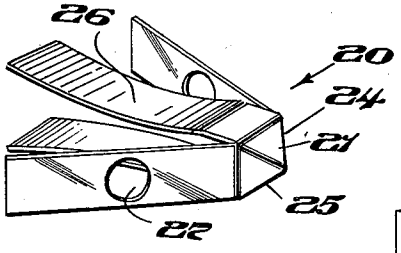

Fig. 4.

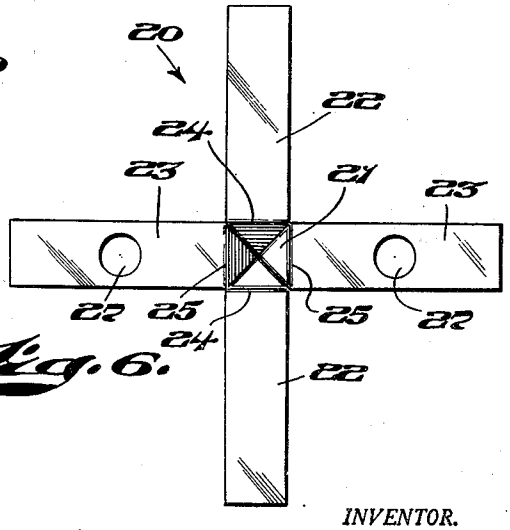

Fig. 6.

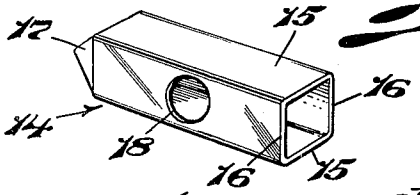

Fig. 5.

INVENTOR.

Joseph Carlton Bagnall, Jr.

BY

Barlow & Barlow

Attorneys

Patented Apr. 17, 1951

2,548,930

UNITED STATES PATENT OFFICE

2,548,930

CUFF LINK WITH TILTING HEAD

Joseph Carlton Bagnall, Jr., Attleboro, Mass., assignor to Swank, Inc., a corporation of Delaware

Application August 26, 1948, Serial No. 46,273

4 Claims. (Cl. 24—97)

1

This invention relates to a cuff link of the type in which one of the heads is movable into alignment with the shank or post for insertion through the buttonhole of a cuff, after which the head is moved to a position at right angles to the post to retain the cuff link in the buttonhole of the cuff.

The tilting tubular head of the cuff link is retained in the position to which it is moved by a spring concealed within the head which engages a square bar which extends through the head. Closure means for the ends of the tubular head are found to be difficult to hold in place, and quite frequently the closure ends which may consist either of a metal closure or a gem of some sort, will come loose from the head and be lost, thus exposing the springs and causing the link to become unsightly.

One of the objects of this invention is to provide a construction which will close the head and not become liable to removal and loss.

Another object of this invention is to provide a head which will have the springs which are used to hold the head in position integral with the closure of the head.

Another object of this invention is to provide a head of telescopic structure which will have a sufficient surface to surface engagement so that the parts may be readily held in assembled position when telescoped together.

With these, and other objects in view, the invention consists of certain construction features which will be pointed out in the appended claims.

With reference to the drawings:

Figure 1 is a perspective view of the cuff link shown in the position in which it would be placed when in the cuff.

Figure 2 is a section view on line 2—2 of Figure 1.

Figure 3 is a section view on line 3—3 of Figure 2.

Figure 4 is a perspective view of the closure member for the open end of the tubular member of the head.

Figure 5 is a perspective view of the tubular member.

Figure 6 is a top plan view of the closure member which is shown in Figure 4, prior to the bending of the arms into position.

Figure 7 is a perspective view of a modified form of closure member of the tube.

In proceeding with this invention, I draw a head in tubular form with an integral closure at one end while the other end is open and is closed by a separate closure which is provided

2

with a spring by folding from the portion which closes the open end of the tube, two arms which serve as springs to engage a post, and hold the member in the desired position, with reference to the cross bar between the portions of a bifurcated post, while two other arms which are at right angles to the spring arms are folded from the closure and are provided with openings to receive the bar and thus when the bar passes through these openings, these arms serve to lock the closure member in position.

With reference to the drawings, 10 designates a post having spaced parts 11 and 12 with a cross bar 13 which is square in cross section, extending between the two parts of the post. The head, which is mounted on this cross bar, comprises two pieces. One piece is shown in Figure 5 at 14, which is generally of tubular construction, having top and bottom walls 15 and sidewalls 16 and is closed by a wall 17 at one end while the opposite end is open. Sidewalls 16 are also provided with oppositely aligned openings 18 through which the cross bar 13 extends.

The second member of this head is designated generally 20, and comprises a construction which is generally of cross shape as shown in Figure 6, having a center closure portion 21 of pyramidal shape, as shown in Figures 2 and 4, which is struck from a flat piece of sheet stock. This pyramidal shape corresponds to the pyramidal shape of the end 17 of the tubular member 14. Arms 22 extend from opposite sides of this pyramid 21, as shown in Figure 4, while additional arms 23 extend from opposite sides of the closure 21, as shown also in Figure 4. These arms are bent from the pyramid 21, as at 24 and 25, into the positions, such as shown in Figure 4. The arms 22 are arched inwardly, as at 26, while the arms 23 are provided with openings 27 therethrough, which register with openings 18 and receive the cross bar 13 through these openings.

When the member 20 is assembled with the member 14, as shown in Figure 2, the arcuate arms 26 will engage the flat sides of the square cross bar 13, while their ends 28 will engage the sidewalls 15 of the tubular member. These arms will be flexed as the head is turned and the springs are moved from one opposite set of flat surfaces of the bar 13, to the other set of flat surfaces at right angles thereto. The other arms 23 are folded or telescoped into the tubular member 14 and align themselves with the opening 18 of the tubular member for the reception of the

cross bar 13 through them. By reason of the cross bar passing through the opening 27, it is impossible for the closure 21, or the member 20, to escape from its telescoped position within the member 14.

In some cases, the arms 23 may be omitted, as shown in Figure 7, wherein the spring arms 22 will be integral with the closure 21. In this case, the closure member, designated as a whole 20, is of a somewhat simpler construction.

A fixed head 30 will be provided, at the open end of post 10, to provide the second head of the cuff link. This may be of any form or any construction, as desired. In the construction here shown, it is of a shape to match the shape of the movable head which is above described.

I claim:

1. In a cuff link, a bifurcated post having spaced parts, an angular bar extending between the spaced parts of said post, a head pivotally mounted on said bar, said head comprising a tube having one end closed, a closure for the other end of the tube having formed, from the same piece of material as the closure, spring arms and also arms at right angles thereto telescoping within said tube, said spring arms engaging said angular bar and retaining the head in desired position with relation thereto.

2. In a cuff link, a bifurcated post having spaced parts, an angular bar extending between the spaced parts of said post, a head pivotally mounted on said bar, said head comprising a tube having one end closed, a closure for the other end of the tube having formed, from the same piece of material as the closure, spring arms and also arms at right angles thereto telescoping within said tube and provided with openings through which said bar extends, said spring arms engaging said angular bar and retaining the head in desired position with relation thereto.

3. In a cuff link, a bifurcated post having spaced parts, an angular bar extending between the spaced parts of said post, a head pivotally mounted on said bar, said head comprising a tube having one end closed by the same piece of stock as its tube, a closure for the other end of the tube from a different piece of stock with arms formed from the same piece of material as the closure, two of said arms extending substantially the length of the tube and being bowed inwardly at the location of the angular bar to yieldingly engage a flat portion of said bar and retain the head in desired position, and two other arms at right angles to the spring arms also telescoping within said tube.

4. In a cuff link as in claim 3 wherein the arms at right angles to the spring arms are provided with openings through which said bar extends.

JOSEPH C. BAGNALL, JR.

REFERENCES CITED

The following references are of record in the file of this patent:

UNITED STATES PATENTS

Number	Name	Date
2,093,723	Hone	Sept. 21, 1937