United States Patent [19]

Wilcox

[11] **Des. 257,191**

[45] ** **Oct. 7, 1980**

[54] **MOLDED PLASTIC CONTAINER**

[75] Inventor: **Donald G. Wilcox**, P.O. Box 4030 Lunar Dr., Woodbridge, Conn. 06525

[73] Assignees: **Donald G. Wilcox**, Seymour, Conn.; **Show-Pak Inc.**, Woodbridge, Conn.

[**] Term: **14 Years**

[21] Appl. No.: **969,954**

[22] Filed: **Dec. 15, 1978**

[51] **Int. Cl.** ..... **D3—01**

[52] **U.S. Cl.** **D3/73**; D3/76

[58] **Field of Search** ..... D3/30, 38, 39, 73, 76, D3/99; D9/249; 229/52 B, 29 M, DIG. 13; 190/41 R

[56] **References Cited**

U.S. PATENT DOCUMENTS

D. 194,339	1/1963	Harty, Jr. et al.	D3/73
D. 196,955	11/1963	Parsell	D3/76
D. 218,266	8/1970	Belokin, Jr.	D3/38
D. 218,267	8/1970	Belokin, Jr.	D3/73
2,901,159	8/1959	Talbot, Jr.	229/52 B

Primary Examiner—Donald B. Moyer

Attorney, Agent, or Firm—John A. Mitchell

[57] **CLAIM**

The ornamental design for a molded plastic container, substantially as shown and described.

DESCRIPTION

FIG. 1 is a perspective view of a molded plastic container showing my new design, the opposite sides not seen being mirror images of those shown; and

FIG. 2 is a bottom rear perspective view thereof.

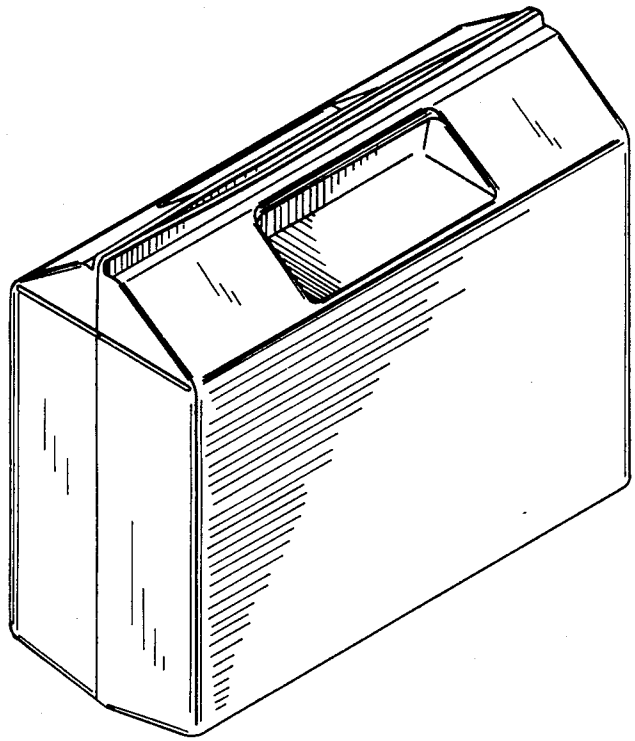

FIG. 1

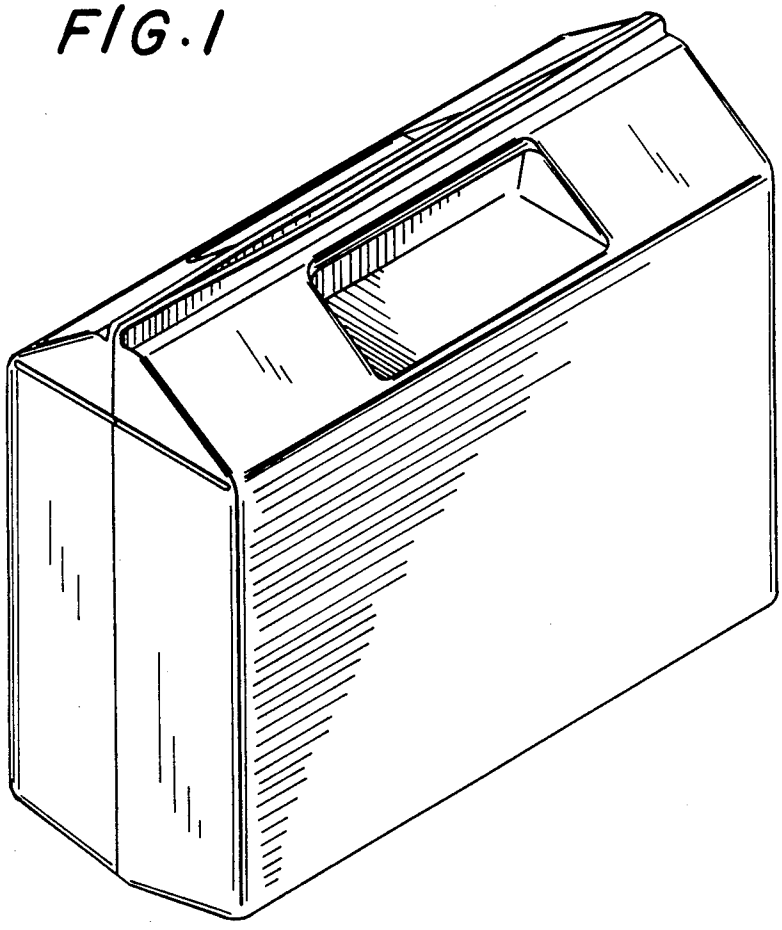

FIG. 2

