United States Patent [19]

Riello

[11] **3,756,039**

[45] **Sept. 4, 1973**

[54] **AIR CONDITIONER**

[75] Inventor: **Valerio Giordano Riello,** Legnago, Italy

[73] Assignee: **Riello Condizionatori S.A.S. di Giordano-Riello & C.,** Bevilacqua, Verona, Italy

[22] Filed: **June 21, 1971**

[21] Appl. No.: **154,956**

[30] **Foreign Application Priority Data**

June 20, 1970 Italy 26327 A/70

[52] **U.S. Cl.** **62/262,** 62/428, 62/429

[51] **Int. Cl.** **F25d 23/12**

[58] **Field of Search** 62/262, 428, 429

[56] **References Cited**

UNITED STATES PATENTS

2,071,366	2/1937	Weiland	62/429
2,269,205	1/1942	Hubbard	62/262
2,751,760	6/1956	Williams	62/289
2,939,297	6/1960	Karger	62/262
2,945,359	7/1960	MacLeod	62/429
2,945,362	7/1960	Gould	62/262
2,984,089	5/1961	Whitesel	62/262
3,406,530	10/1968	Riello	62/262

FOREIGN PATENTS OR APPLICATIONS

1,362,186	4/1964	France	62/429

Primary Examiner—William J. Wye
Attorney—Michael S. Striker

[57] **ABSTRACT**

An air conditioner for house or office rooms, wherein an outer casing comprises and two main structural components, preferably of molded plastics, which are juxtaposed and assembled across a substantially planar horizontal surface, said components comprising openings, partition walls and spaces to define, when assembled, chambers for the electromechanical equipment of the air conditioner, as well as passages for cold and warm circuit air streams.

5 Claims, 7 Drawing Figures

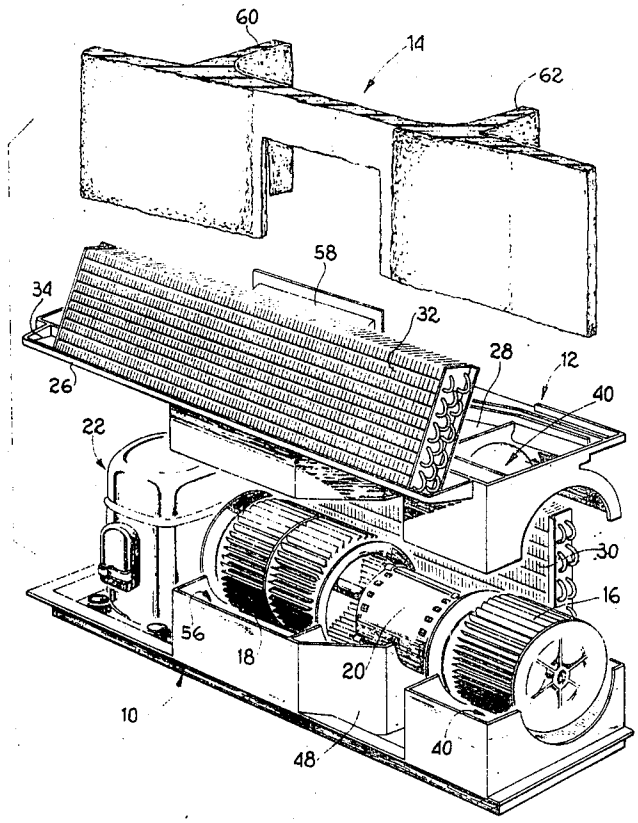

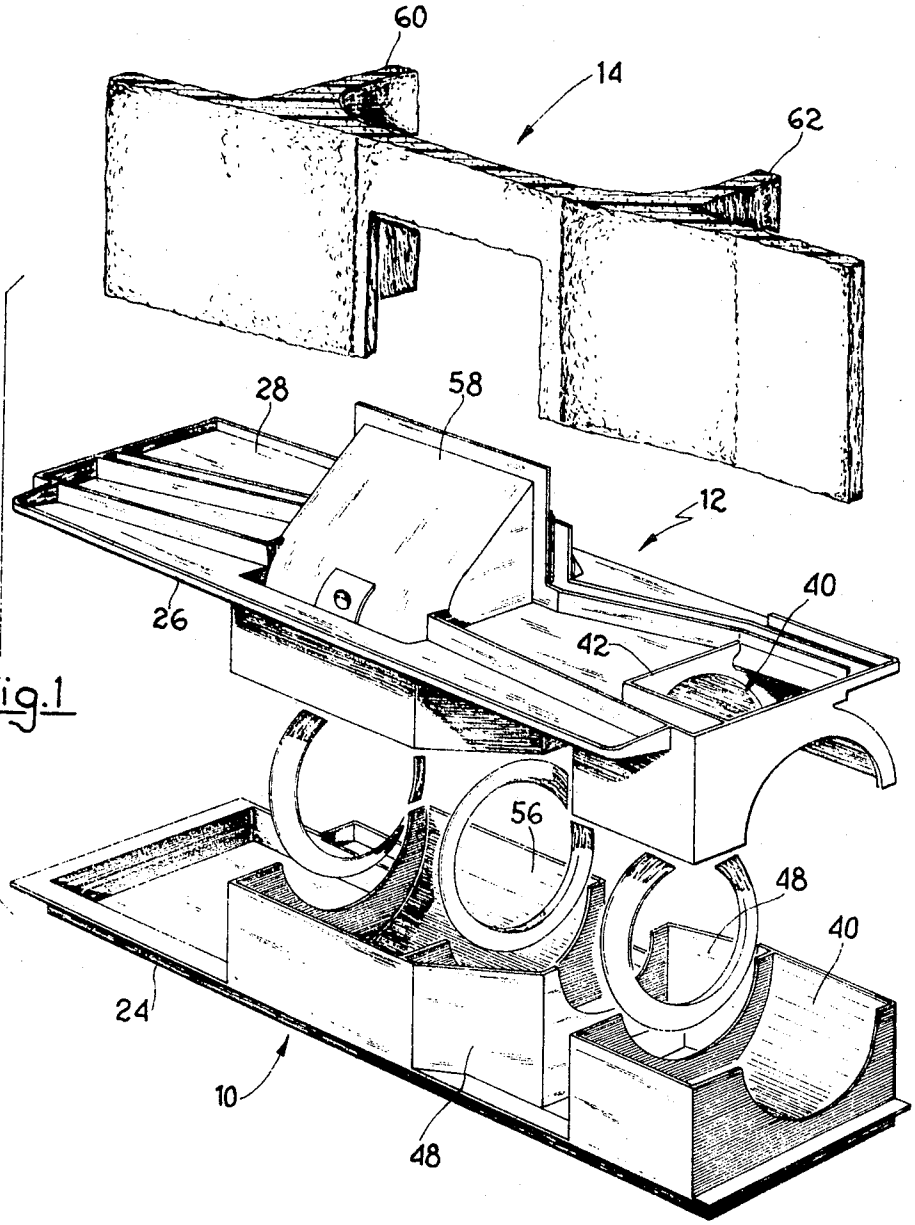

Fig. 1

Fig.2

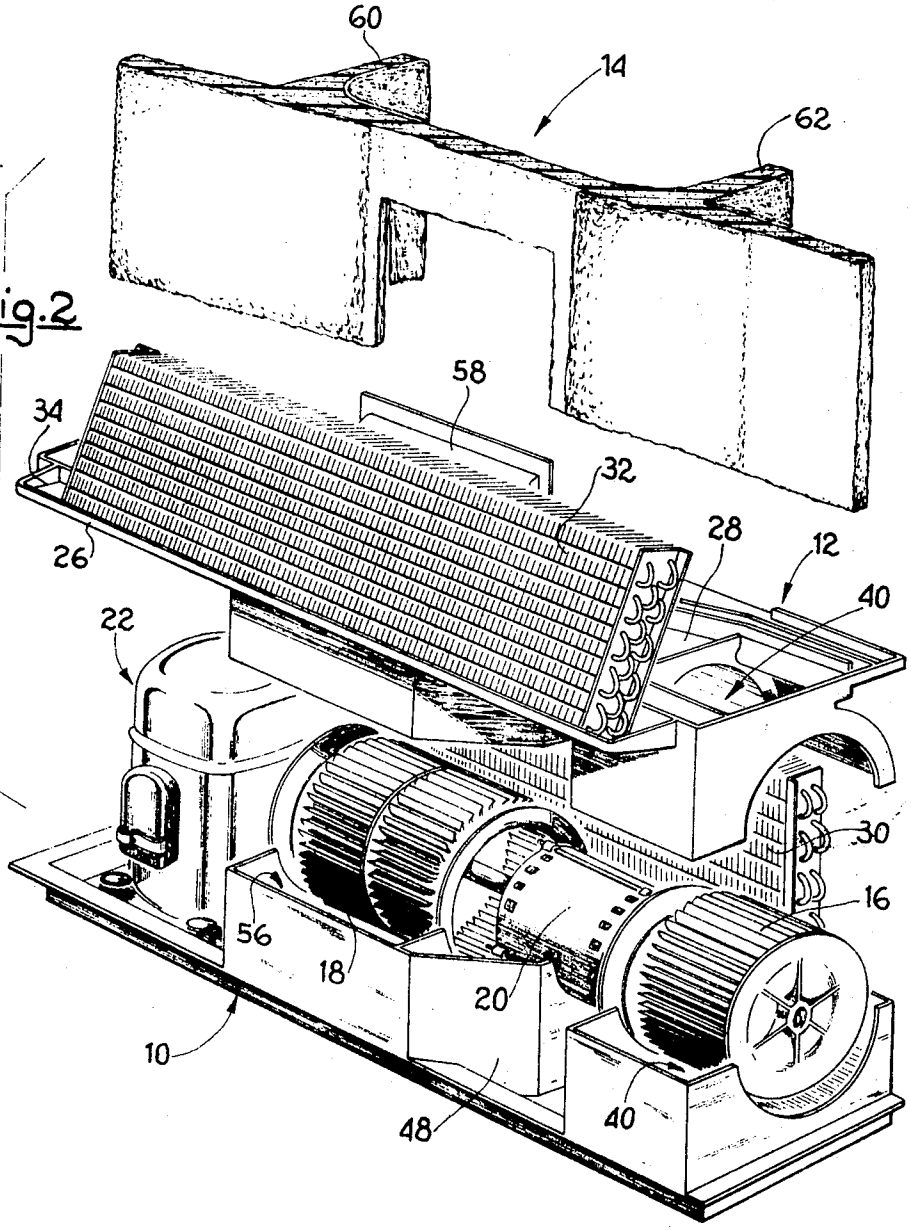

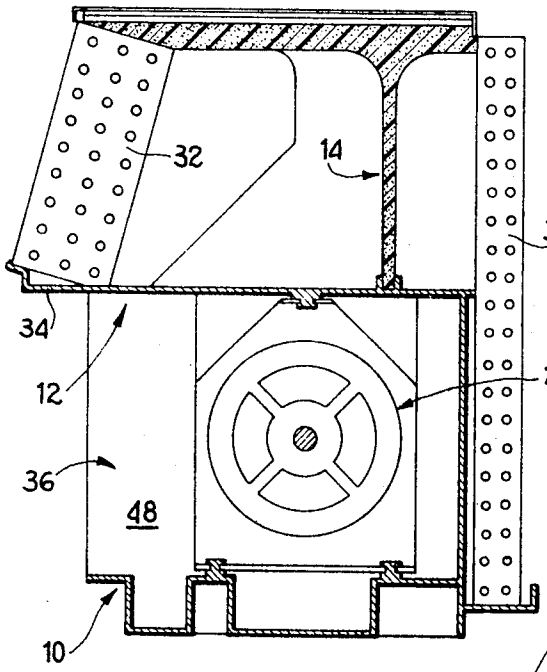

Fig.3

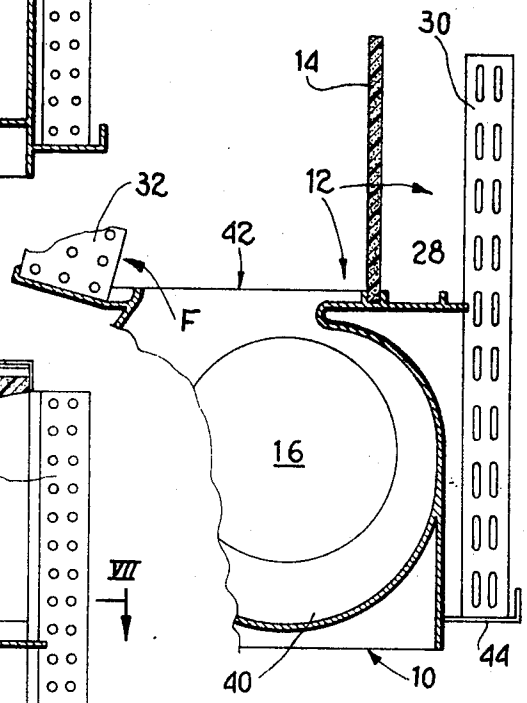

Fig.4

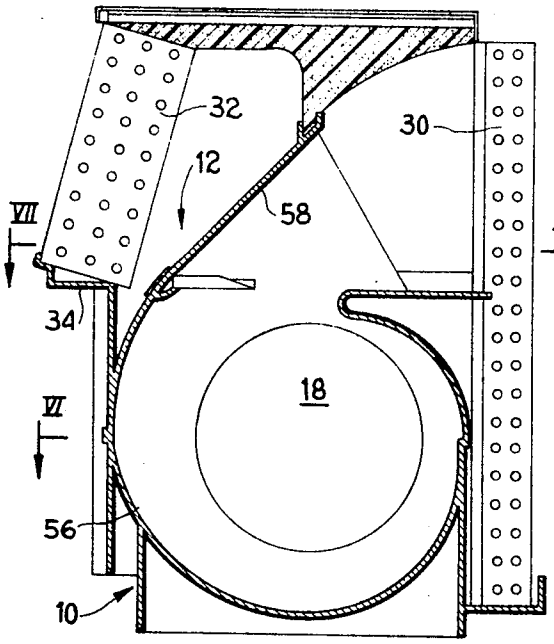

Fig.5

Fig. 6

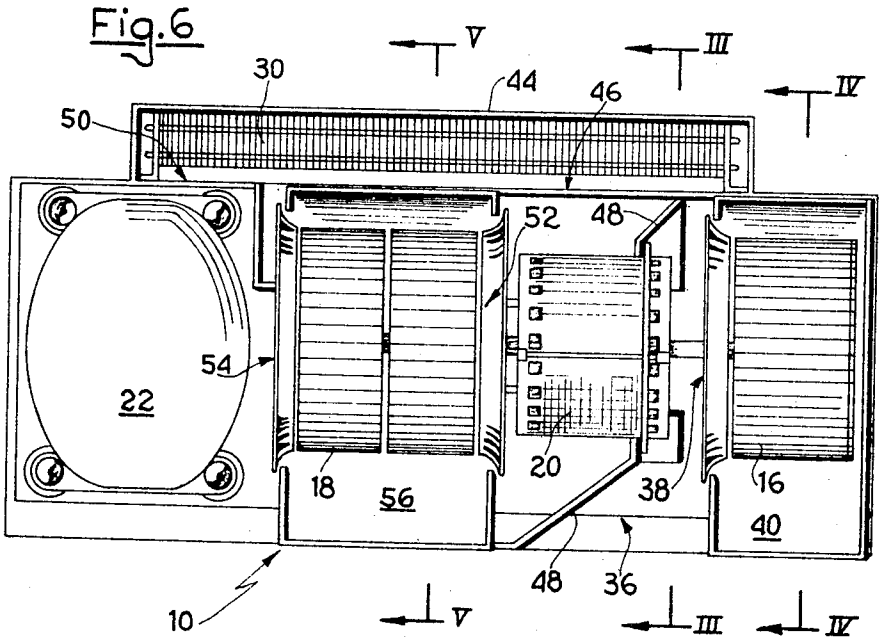
V
III
IV
30
44
46
50
52
48
54
22
20
18
56
38
16
40
48
36
10
V
III
IV

Fig. 7

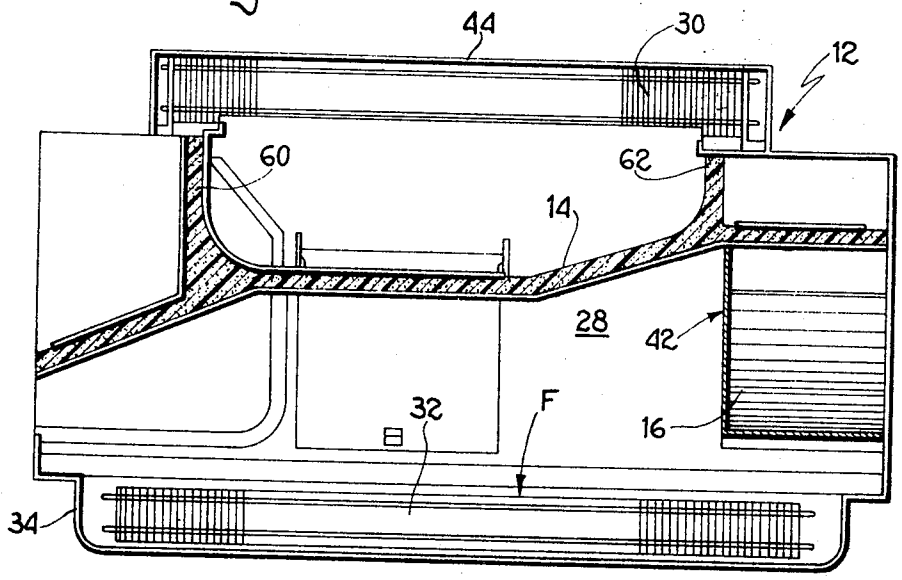
44
30
12
60
62
14
28
42
32
F
16
34

AIR CONDITIONER

BACKGROUND OF THE INVENTION

This invention relates to air conditioners adapted for conditioning (usually for cooling) the inner atmosphere of house or office rooms and the like. Further, this invention concerns a method for industrially producing said air conditioners and in particular the structural components thereof.

Such air conditioners are already well known and widely utilized. Obviously, a good efficiency and high power thereof should be associated, if possible, with an unexpensive production, a good installation versatility, a reduced noisiness and so on. However, said requirements are, as well known, sharply conflicting.

Indeed, said air conditioners comprise rather complicated equipments, wherein a complete refrigerating battery is housed within a usually parallelepipedon shaped outer casing having sides a few centimeters long, said refrigerating battery comprising a motor-driven compressor unit, an evaporator wherein a fluid heat carrier ("Freon" or other easily liquefiable gas or gas mixture) is caused to expand in order to absorb heat from the room, and a condenser wherein said heat carrier is again liquefied under a suitable pressure in order to give-out said previously taken-up heat.

Two physically and thermally separated circuits must be provided within said casing, each of said circuits comprising suitable passages to force related air streams through the pipe coils of said evaporator and condenser, respectively. Said air streams are generated and maintained by suitable blowers or blower fans which operate in said circuits and are driven by motor means different from that of said compressor. Said casing comprises inlet and outlet openings for a warm circuit and a cold circuit, respectively, said openings leading to two different environments, i.e., a conditioned or inner environment and an outer environment wherein the calories withdrawn from the former environment are discharged, or wherefrom calories for heating said inner environment are taken-up (when the air conditioner is utilized as a heater).

Therefore, said air conditioners show a rather complicated inner structure, wherein a plurality of partition walls are provided for physically separating said warm or cold air stream flowing passages. Said different passages shall be connected in such a manner as to create the least possible drag to said air streams.

Further problems arise from a well known and undesirable noisiness of such equipments, which comprise blower fans operating in an environment directly communicating with the outside.

SUMMARY OF THE INVENTION

An object of this invention is to provide air conditioners that allow an industrial production thereof at reduced costs, with reference both to single component manufacture and assembling thereof, said air conditioners showing a high efficiency and operational reliability, an extended useful life and a noiseless operation.

According to this invention, a main space — that is a part of the whole space enclosed by said air conditioner parallelepipedon shaped casing and wherein the air conditioner electromechanical components are housed — is subdivided into two sections separated by a plane (or an approximately planar surface), said

plane being preferably horizontal and parallel to the major sides of said parallelepipedon shaped casing, and a conditioner inner structure is subdivided into two main components facing with each other and connected across said plane (or approximately planar surface), said components co-operating to form air stream conveying passages, inlet and outlet openings therefor and partition walls physically separating passages and openings wherein warm and cold air streams, respectively, flow.

The air conditioners blower fans and related driving motor means are preferably co-axially fitted and said plane (or planar surface) lies close to, and preferably comprises both the fan and motor shaft axes.

Said main inner space is subdivided into two physically separated sections comprising a warm and respectively a cold air circuit. Said conditioner parallelepipedon shaped casing comprises also a subsidiary space, preferably superimposed to said main space and separated therefrom by one of said main structural components. Said subsidiary space — preferably above said main space — comprises passages wherein heat exchange means between air and fluid heat carrier are at least partially fitted, said passages being in turn physically and thermally separated by a third structural component, advantageously made of an expanded plastics or other suitable heat insulating material.

DRAWINGS

FIG. 1 is an exploded perspective view of the main structural components of an air conditioner according to this invention.

FIG. 2 is a similar view of the same components, along with the electromechanical and heat transfer and exchange system elements.

FIGS. 3, 4 and 5 are diagrammatic sections of the air conditioner structure, taken on planes perpendicular to blower fan axes, as indicated with III—III, IV—IV and V—V, respectively, in FIG. 6.

FIG. 6 is a section of the assembled air conditioner, taken on the horizontal plane VI—VI in FIG. 5.

FIG. 7 is another section of the air conditioner, taken on the plane VII—VII in FIG. 5.

PREFERRED EMBODIMENT

According to this invention, the whole air conditioner structure essentially consists of two components **10** and **12** only, to which a third component **14** is associated in order to physically and thermally separate passages wherein a warm air stream and a cold air stream, respectively, flow. Said structural components **10** and **12** are connected in opposite relationship with each other across a plane (or an approximately planar surface), preferably horizontal and parallel to the major sides of a parallelepipedon shaped air conditioner casing. Said plane comprises the axes of centrifugal blower fans **16** and **18**, as well as the shaft of an electric motor **20** therefor, said axes and shaft being aligned parallely to the major sides of said parallelepipedon shaped casing. Moreover, said components **10** and **12** define a space wherein a motor-driven compressor unit **22** of a type usually utilized in such air conditioner equipments, is housed.

The edge **24** of the lower component **10** defines a plane which is coincident with the air conditioner bottom wall. Likewise, the edge **26** of the upper structural component **12** defines a plane wherein lies an essen-

tially planar member **28** of the same component **12**, acting as a partition wall for separating spaces wherein said air conditioner electromechanical elements (blower fans **16** and **18**, motor **20** and compressor unit **22**) are housed and operated. Within said spaces are also formed passages by which two separate air streams are conveyed through a condenser **30** and an evaporator **32**, respectively, which are of an already known type.

As it can be noticed in particular from FIGS. **2,4,5** and **7**, said condenser **30** extends across the whole height of two spaces overlying and underlying said planar portion **28** of the top structural component **12**, in order to be crossed both by the air sucked and delivered by said warm circuit fan **18**.

The evaporator **32**, that is supported by a cantilever extending tray **34** formed by an extension of said planar member **28** defines one main side of the space above said planar member **28** and is crossed only by the air stream delivered by said cold circuit fan **16**.

The air to be cooled through the evaporator **32** is sucked from an opening **36** (see FIGS. **3** and **6**), then flows axially through a passage **38** (see FIG. **6**) and inside the centrifugal fan **16**, preferably of a drum type, and is finally tangentially delivered into a scroll conveyor **40** (see FIGS. **4** and **6**) leading to an opening **42** of said planar member **28**. Said air stream flows then into said upper space, sidewise the heat insulating partition component **14**, whereafter it is delivered across the evaporator **32** in a direction F, as indicated in FIGS. **4** and **7**.

The warm circuit comprises a plurality of openings formed in the lower part of condenser **30**, which in turn rests on a tray **44** (FIG. **4**) rigidly resured to the bottom component **10**. More detailedly, said openings comprise a first opening **46**, leading to a space partly taken-up by said motor **20** and separated from the space leading to said opening **36** by inclined partition walls **48**, and a second opening **50** leading to a space wherein said compressor unit **22** is housed. The air stream flowing across said opening **50** cooperates to dissipate the heat generated by said compressor unit **22**. The air sucked through both said openings **46** and **50** axially flows in either directions **52** and **54** as indicated in FIG. **6**, into the centrifugal fan **18**, whose vanes tangentially deliver an air stream into a second scroll conveyor **56** that extends into a connecting passage **58** formed in said upper structural component **12** (see FIGS. **1, 2** and **5**). Said air stream is then delivered from the opposite side of said heat insulating component **14**, between arms **60** and **62** thereof, and is finally conveyed across the top section of said condenser **30**.

As it can be noticed from the drawings, said components **10** and **12** are rather complicated. However, they can be molded dies that can be juxtaposed at least partially in a plane as indicated by VI—VI in FIG. **5**, and partially in other suitably selected planes.

Said components comprise many flat surfaces and many curved surfaces (as e.g., the surfaces defining said scroll shaped walls of fan conveyors), as well as surfaces at right angles and other surfaces defining angles far from 90° (e.g., walls **48**). Said different surfaces achieve a high mechanical strength and stability against deformations, due to the juxtaposition of said two components in said plane VI—VI. The contacting opposed edges of said components may be suitably shaped in order to ensure firm abutting joints.

Said two components cooperate to form a box-like structure having an inner space subdivided into a plurality of chambers. Said box-like structure, owing to its complicated shape comprising differently shaped and sized chambers formed therein, having planar and curved surfaces, as well as to sound-proofing properties of plastics, is unusually noiseless and above all anti-resonant, which results in unusually silently operating air conditioners.

As it can be noticed from the above description, said structural components and in particular said bottom component **10** operate also as supporting means for said air conditioner electromechanical elements and in particular said fan axes and motor shaft.

The above structural features of said components allow the same to be molded in one piece with suitable synthetic materials, as e.g., a polyamide resin or a polyester resin, or even a copolymer of styrene, as acrylonitrile-butadiene-styrene copolymers or anyother material having similar properties. Particularly suitable are thermoplastic synthetic polymers having an essentially linear molecular structure, as e.g., polyamides, polyesters and copolymers or mixtures thereof, reinforced with glass fibres having a very small length, which are already well known as molding materials. The use of such materials, along with said previously described structural features of air conditioner components allow to obtain structures having a very high stiffness and dimensional stability, even under wide room temperature changes, thus affording to the air conditioners highly desirable properties, as, e.g., a thermal resistance, a silent operation, a physical strength and so on. The structural component **14**, which does not have a physical strength function but is merely an intervening wall and heat insulator between warm and cold air streams, may be made of any high thermal insulating material, as, e.g., expanded polystyrene, and can be molded in one piece.

I claim:

1. In an air conditioner, a combination comprising a motor and a pair of centrifugal fans driven by said motor and arranged on opposite sides of and along a common axis with said motor; and a casing surrounding said motor and said fans, said casing comprising two integral main components meeting each other along a plane including said axis and being fixedly connected to each other, each of said components having a plurality of walls extending transverse to said axis and respectively aligned with transverse walls of said other component so as to divide said casing into two chambers respectively housing said fans and a third chamber located between said two chambers and housing said motor, each of said transverse walls being provided with substantially semi-circular opening forming with the semi-circular opening in the corresponding transverse wall of the other component as axial inlet opening of circular cross section for the respective fan and each of said components having a curved wall between the transverse walls defining each of said two chambers and meeting the curved wall of the other component in said plane so that the meeting curved walls define a scroll-shaped space surrounding a respective one of said fans, one of said components being formed in each of said curved walls with a substantially tangential outlet opening communicating with the respective space.

2. A combination as defined in claim **1**, wherein each of said main components is integrally molded from plastic material.

3. A combination as defined in claim **1**, wherein said casing is of substantially parallelepipedon shape, said one component having a top wall in which said outlet openings are formed and extending substantially parallel to said plane, and further including an evaporator supported on said top wall, and condenser supported on the other component and extending along said casing upwardly beyond said top wall, a compressor supported on said other component, and a third component supported on said top wall and forming passages for directing an air stream emanating from one of said fans over said condenser and an air stream emanating from the other of said fans over said evaporator.

4. A combination as defined in claim **3**, wherein said third component is formed from heat-insulating material.

5. A combination as defined in claim **4**, wherein said heat-insulating material comprises expanded polystyrene.

* * * * *