Oct. 8, 1940. H. L. KUTTER 2,216,817

PAPERMAKING MACHINE

Filed May 2, 1938 2 Sheets-Sheet 1

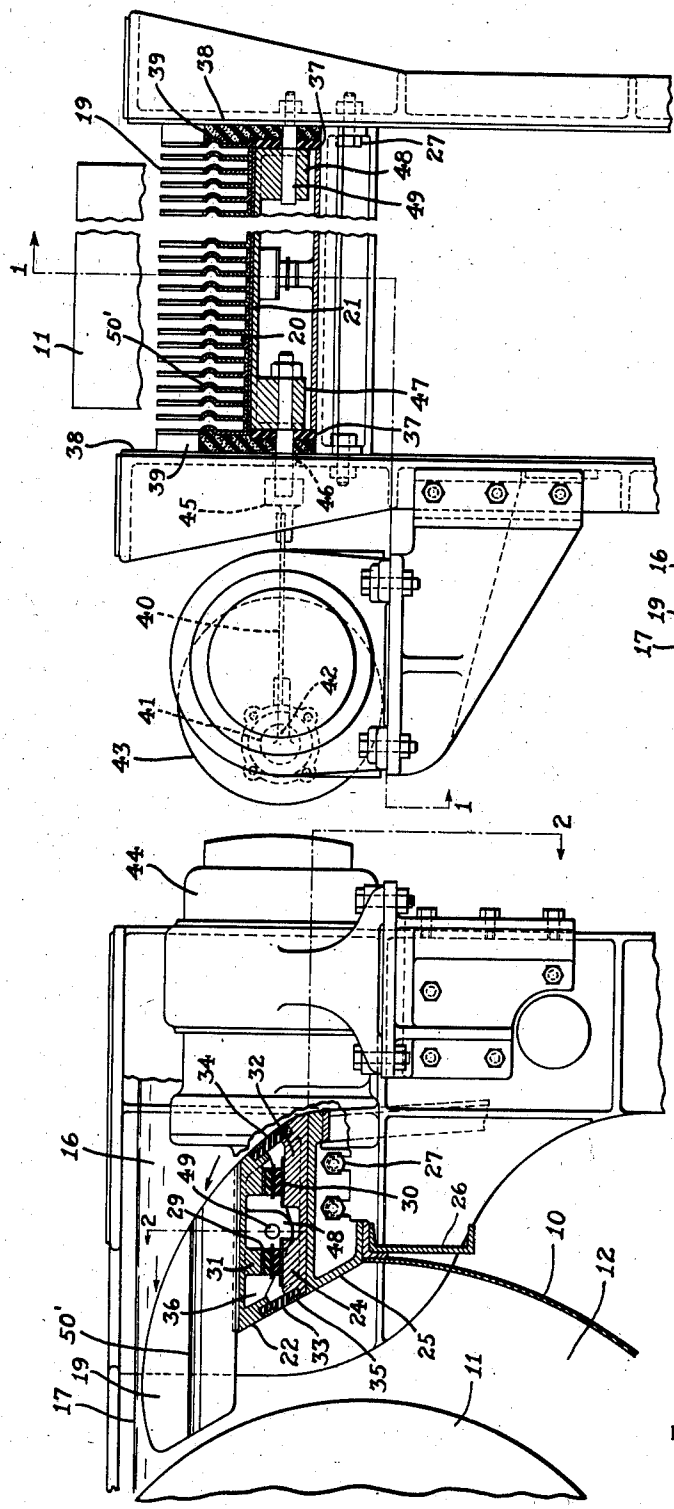

Fig. 1

Fig. 2

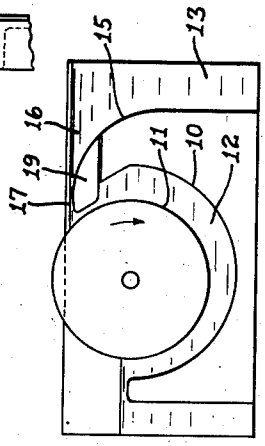

Fig. 3

INVENTOR
Herman L. Kutter
BY Marechal & Nox
ATTORNEY

Oct. 8, 1940. H. L. KUTTER 2,216,817

PAPERMAKING MACHINE

Filed May 2, 1938 2 Sheets-Sheet 2

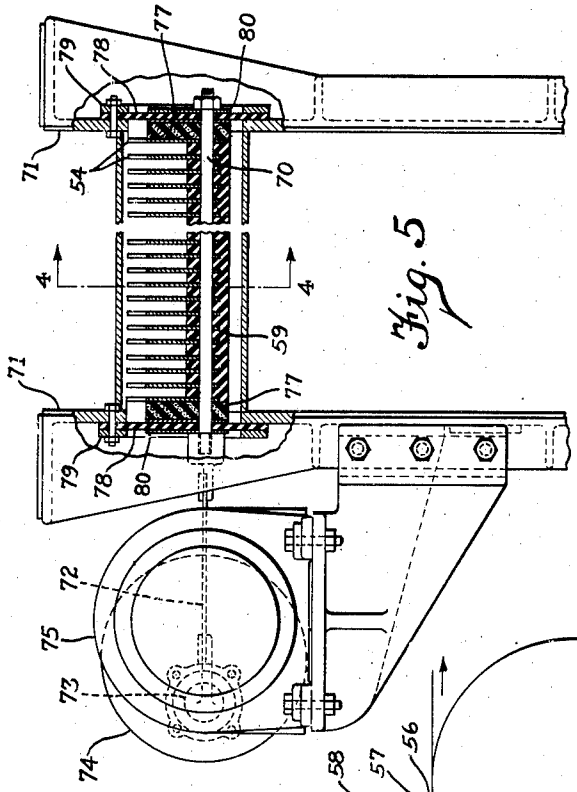

Fig. 5

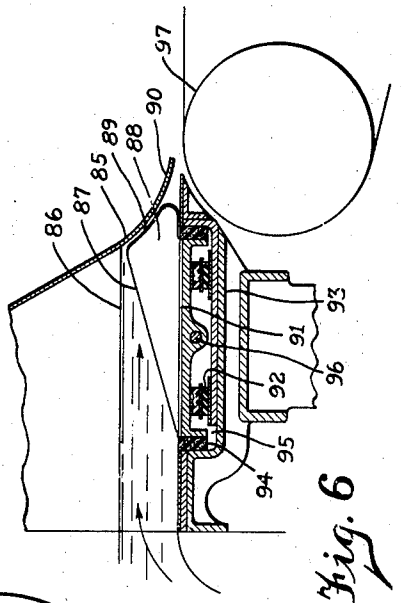

Fig. 6

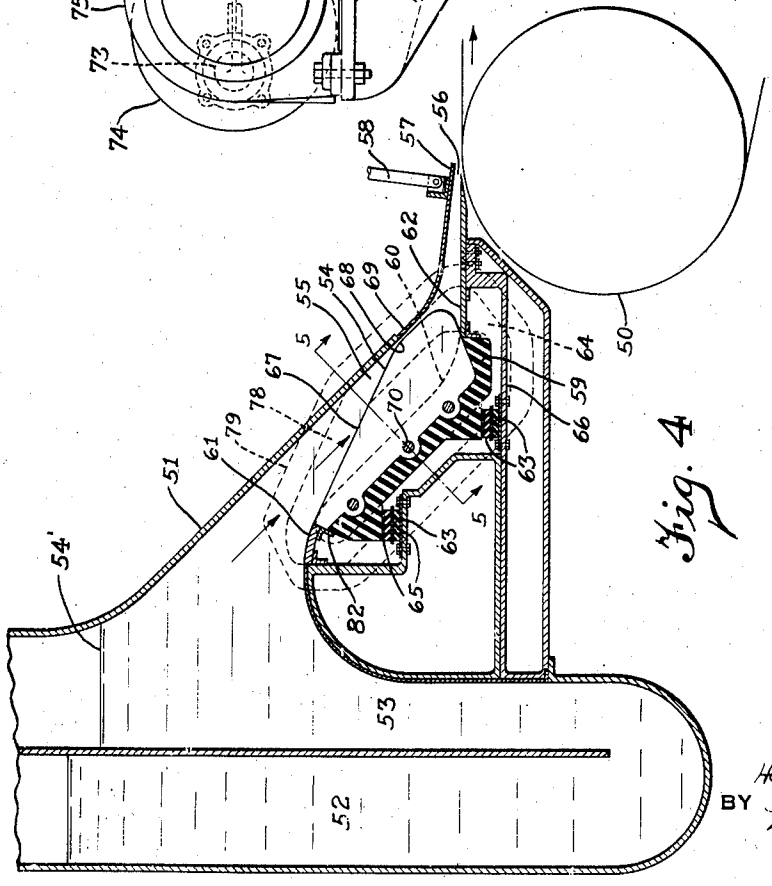

Fig. 4

INVENTOR
Herman L. Kutter
BY Mareichal & Noe
ATTORNEY

Patented Oct. 8, 1940 2,216,817

UNITED STATES PATENT OFFICE

2,216,817

PAPERMAKING MACHINE

Herman L. Kutter, Hamilton, Ohio, assignor to The Black-Clawson Company, Hamilton, Ohio, a corporation of Ohio

Application May 2, 1938, Serial No. 205,444

4 Claims. (Cl. 92—43)

This invention relates to papermaking machinery.

One object of the invention is the provision of a simple and efficient arrangement of reciprocating plates in the flow passage through which the stock of a papermaking machine flows to the forming wire adapted to impart reciprocatory movement to the stock so as to effectively separate the individual fibers one from another before the stock fibers are applied to the forming wire, and producing an even parallel stock flow on the forming wire.

Another object of the invention is the provision of an arrangement of the character mentioned in which the plates are mounted on a common supporting member which is vibrated in the direction of length of the blade series, the plate formation and its support being such that the retention of stock fibers on the blade edges or between adjacent blades is prevented.

Another object of the invention is the provision of a reciprocatory plate construction for the flow passage of a papermaking machine, in which yieldable resilient filler pieces are employed between the plates at the ends of the series and the adjacent portions of the flow passage, providing a uniform distribution of stock at the end of the sheet produced on the forming wire.

Other objects and advantages of the invention will be apparent from the following description, the appended claims, and the accompanying drawings, in which

Fig. 1 is an end elevation, partly in section on the line 1—1 of Fig. 2, and showing a portion of a cylinder mold machine embodying the present invention;

Fig. 2 is a side elevation of the cylinder machine, a part being shown in section on the line 2—2 of Fig. 1;

Fig. 3 is a sectional view, on a small scale, of the cylinder mold machine corresponding to Figs. 1 and 2;

Fig. 4 is a central vertical section through the head box and breast roll of a Fourdrinier machine embodying the present invention;

Fig. 5 is a section on the line 5—5 of Fig. 4; and

Fig. 6 is a vertical section through the head box of a modified form of Fourdrinier machine.

Referring to the drawings by reference numerals, and more particularly to Figs. 1 to 3 inclusive, 10 generally designates the vat and 11 the rotatable forming screen of a papermaking machine of the cylinder mold type. The stock is supplied to the chamber 12 in the vat from the upwardly extending passage 13 and over the top of a wall 15 which, together with the side walls of the vat, provides a flow passage 16 through which the stock at a suitable depth is supplied to the forming mold.

At the top of the wall 15 and below the upper surface 17 of the stock supply is a series of reciprocating blades or plates 19 which are vibrated in the direction of the length of the series at a comparatively high rate and with a suitable small travel so that the stock fibers, just before they are applied to the forming mold, are shaken loose and separated one from another, providing a stock consistency which will be uniform throughout and in which the various individual fibers will be positioned in random arrangements, each fiber being separated by a small space from adjacent fibers. The plates 19 are preferably metal sheets of about $\frac{1}{16}$'' thickness, preferably of stainless steel and having a spacing of the order of about $\frac{3}{4}$''. The series of plates extends throughout the entire width of the flow passage 16.

The plates 19 extend parallel to the general direction of stock flow through passage 16, while the lower ends of the plates are preferably flanged laterally as indicated at 20, these flanged portions being welded or fixed in a similar manner to a plate 21 which is fixed to the upper side of the connecting member 22 which is preferably a metal casting. The connecting member 22 to which all of the plates of the series are connected is supported for movement in the direction of length of the series on a support 24 rigidly bolted or secured to the wall portion 25 of the vat. This wall portion is preferably mounted in a detachable manner on a supporting structure including a beam 26 which extends transversely across the vat from one side wall to the other. Bolts 27 serve to fasten the wall portion 25 to the side walls of the vat.

Between the common connecting member 22 on which the plates are carried, and the upper side of the support 24 are a number of supporting devices providing for movement of the member 22, and preferably comprising rubber blocks vulcanized to upper and lower metal strips 29 and 30, these strips being respectively attached by suitable screws or the like to the downward projections 31 of the common connecting member 22 and upward projections 32 of the support 24. The rubber blocks are thick enough to afford movement of the member 22 through a travel of at least one-fourth inch in the direction of the length of the series. Yieldable strips 33 and 34, preferably of rubber, are connected at their upper and lower edges by means of metal securing

strips 35 to the connecting member 22 and the support 24, sealing the forward and rear walls of the chamber 36, in which the rubber supporting blocks are arranged, against the entrance of stock and water.

The opposite ends of the chamber 36 are also sealed against the entrance of stock and water by means of yielding sheets 37, preferably of rubber, which are connected along their upper portions to the connecting member 22 and at their lower portions to the support 24. Between each of the sheets 37 and the adjacent end wall 38 of the vat is a rather thick filler piece 39, preferably of sponge rubber, these filler pieces also extending between the end plates 19 of the series and the vat walls 38, the filler pieces at their upper portions being coextensive with the plates 19. The filler pieces 39 may expand and contract as the blades are vibrated between the end walls 38 of the vat, and serve to provide an even, regular flow of stock at the ends of the series of plates, preventing the creation of rapid streams or jets at the very ends of the series that might otherwise be produced by the change in distance between the movable end plates and the stationary walls 38.

Vibratory movement is imparted to the connecting member 22 by means of a reciprocating flexible metal strap 40 operated preferably from an eccentric 41 which is rotated about an axis 42 by means of suitable gearing arranged in a speed reducing gear casing 43. An electric motor 44 or the like operates the speed reducing gearing, the arrangement thus producing a reciprocatory movement of the rod 40 at a rate of the order of from 600 to 1500 cycles per minute, and with a stroke of from ¼" to 1/64" or less, it being understood that the higher speeds and smaller strokes are employed when the speed of the forming wire is highest. The end of the strap 40 is secured to a coupling member 45 which is adapted to reciprocate endwise in an opening 46 in the wall of the vat. Coupling member 45 is secured to a connecting flange 47 that forms a part of the common connecting member 22. At the opposite end of the connecting member 22 is a second downwardly extending flange 48 which is slidable on a supporting stud 49. The stud 49 is fixed to the side wall of the vat and projects through holes in the rubber sheet 37 and filler piece 39. It will thus be apparent that the entire blade series may be vibrated rapidly in the direction of the length of the series between the fixed side walls 38 of the vat, with suitable filling pieces between the ends of the series and the vat walls alternately compressing and expanding at the opposite sides of the vat and preventing disturbing jets or rapid local streams of stock at the ends of the series.

The upstream edges of the various plates 19 are arranged at a suitable small angle to the general direction of flow of stock towards those edges so that the stock fibers will not be accumulated or piled up on those edges but will be carried along by the flow and swept up to the top of the blades due to the relatively small angle between the upstream edges of the blades and the direction of stock flow towards those edges. The tops of the blades are below but close to the upper surface 17 of the stock so that the entire width and height of the stock supply passage 16 will be affected by the vibratory movement of the blades. The uppermost points of the plates are arranged slightly below the surface 17 so that any stock fibers that may strike against and climb along the upstream edge of a blade will be carried along with the stock flow after reaching a point just below the surface of the stock. Since the common supporting member at the bottom of the series of plates forms the sole supporting means for the plates, and the space between the plates above their bottom edges is quite free of any bolts or rods on which stock might pile up and accumulate, there is no obstruction extending across the stock flow on which an accumulation of stock fibers can take place. Stock fibers tend to accumulate or lodge in a thin layer on a stationary surface even though it is a flat surface substantially parallel to the line of flow, and then peel off, after building up sufficiently, and flow to the forming wire as a thick collection or bundle of fibers and produce an uneven sheet. However in accordance with the present invention the plates are very rapidly vibrated and any substantial accumulation on the surface of the plates is thus prevented, and any bundles or thick collections of fibers that may pass to or through the series of plates is shaken apart and the fibers separated before such collections flow past the plates. And due to the rapid vibratory movement imparted to the plates and the manner in which the plates are arranged so as to straighten the flow and prevent the formation of cross or eddy currents in the stock, a very even, straight flow of stock is produced where the stock meets the forming wire.

The plates 19 project from the wall portion of the vat on which they are mounted towards the downturning side of the cylinder mold and preferably reach to a point rather closely adjacent but slightly spaced from the forming mold, as shown in Fig. 1, so that these overhanging portions of the plates will be effective on the stock just before the stock is applied to the screen. The fibers are thus freed and separated from one another just before they are applied to the screen, and will be arranged in random positions to produce a sheet which will be comparatively high in strength crosswise of the sheet. The blades are preferably bulged or grooved as indicated at 50', with the grooves extending substantially parallel to the direction of stock flow so that the overhanging or projecting portions of the blades will be sufficiently rigid to prevent any substantial flexing movements of the blades themselves.

In accordance with the construction shown in Figs. 4 and 5, in which oscillatable blades are shown in the supply box of a Fourdrinier type of papermaking machine, 50 designates the breast roll and 51 the supply box from which the stock is supplied to the breast roll. The box 51 is preferably arranged to provide a substantial head of stock, being shown with an inlet passage 52 extending downwardly and communicating with an upwardly extending passage 53 in which the stock is maintained at a level as indicated at 54' a considerable distance above the forming screen. The stock flows in the direction of the arrow shown in Fig. 4 and is affected by the vibrating series of plates 54 in the flow passage 55 in a zone just ahead of the outlet orifice 56 from which the stock flows onto the forming wire which is conducted around the breast roll 50. The upper lip 57 of the orifice is preferably adjustable in a vertical direction by means of a series of adjustably positioned rods 58 to provide an even level flow. The plates 54 extend substantially the full length and width of the passage 55 in the supply box so that all portions of the stock are affected by the vibratory plates, freeing the

individual fibers that may have collected in a loose group and arranging the fibers more or less in random positions as the fibers leave the plates and flow to the orifice **56**.

Since the plates are very rapidly vibrated, an even sheet is produced since all portions of the stock above the forming wire are travelling at substantially the same speed and in a direction parallel to the direction of movement of the wire, crossing and eddy currents being eliminated. If the blades were stationary there would be a tendency for the stock to flow at a slower rate of speed at the points in alignment with stationary plates arranged parallel to the direction of flow, producing markings on the sheet in line with the plate positions, but where the plates are very rapidly vibrated transversely to the direction in which the stock is flowing, the flow is evened up throughout the entire width of the sheet and no markings on the sheet will be present.

The plates **54** as herein shown are supported only along their longer edges, which are fixed in a common connecting and carrying member **59**, preferably in the form of a molded hard rubber block. The upper surface of the block, between adjacent blades, forms a smooth surface **60** which is a continuation of the wall portions **61** and **62** of the flow passage **55**. This carrying block **59** is mounted on yieldable rubber blocks **63** which are spaced apart about every two feet or so across the width of the supply box in a chamber **64**, the rubber blocks being vulcanized or otherwise secured to metal plates **65** which are screwed to the connecting block **59** and to the stationary supporting portions **66** of the box structure so that the connecting block **59** can move in the direction of the length of the series of plates, transversely of the flow passage **55**. The upstream edges **67** of the plates **54** are inclined at a comparatively small angle to the direction of stock flow towards those edges so the stock fibers instead of piling up and accumulating on the upstream edges of the plates will be pushed or carried along until they reach the outermost terminal portions **68** of the plates, which is a comparatively small distance from the wall **69**. In view of the space between the wall **69** and the terminal portions **68** of the blades, the fibers will be promptly carried through this space and cannot accumulate on the blades.

Reciprocatory movement is imparted to the carrying block **59** by means of a rod **70** fixed to and provided within the carrying block and projecting through the end walls **71** of the flow box. The end of the rod **70** is connected by means of a flexible operating strap **72** to the eccentric **73** which is rotated through suitable speed reduction gearing provided in the gear chamber **74**, the gearing being operated by a suitable motor **75**.

On the outer sides of the end plates **54** of the series are yielding resilient filler pieces **77**, preferably of sponge rubber and following the contour of the plates so that as the distance between these end plates and the end walls **71** of the stock supply passage changes a jet action will not be produced by the end plates such as might give an uneven formation to the edges of the sheet produced on the forming wire. On the outer sides of the filler pieces **77** are flexible rubber sheets **78** the peripheral portions of which are securely fastened by means of a frame plate **79** to the walls of the flow passage. The middle portions of the flexible sheet **78** are connected by metal plates **80** to the rods **70**, thus sealing the side walls of the flow passage against leakage of liquid, while supporting the series of plates freely for movement in the direction of length of the series. The upper and lower ends of the carrying block **59** are sealed against the leakage of liquid to the adjacent wall portions **61** and **62** of the flow passage, by means of suitable sealing members **82** which are fixed in place on the walls of the flow box and which bear against the moving portions of the carrying block **59**.

Fig. 6 shows a modified form of construction for use in a Fourdrinier machine in which the stock is supplied at comparatively small head to the forming wire. The stock supply passage **85** is supplied with stock to a suitable level as indicated at **86**, the stock flowing in the direction of the arrows indicated in that figure so that the stock meets the upwardly inclined edges **87** of the plates **88** at a comparatively small angle such that the stock fibers will be washed upwardly towards the top of the plates and then may flow down through the small passage **89** between the plates and the wall **90** of the stock supply passage. The uppermost point of the blade **88** is just slightly below the stock level **86**. The plates **88** are welded to the common connecting or carrying member **91** in the same manner as in the construction illustrated in Fig. 2. The connecting member **91** is mounted on a series of rubber blocks **92** which are carried by a support **93**. Between the walls of the support and the sides of the connecting member **91** are thick yielding rubber strips **94** which permit movement of the blades in the direction of the length of the series while maintaining a seal against the entrance of liquid into the chamber **95**. Similar rubber strips are arranged at opposite ends of the connecting member **91** and between it and the side walls of the stock supply passage, and sponge rubber filler pieces may be arranged at the outer sides of the end plates as in the construction shown in Figs. 1 and 2. Vibratory movement is imparted to the rod **96** in the same manner as in the constructions illustrated in the other figures, in order to vibrate the plates **88** and thus separate the individual fibers from one another just before the stock is applied to the forming wire which travels around the breast roll **97**.

While the forms of apparatus herein described constitute preferred embodiments of the invention, it is to be understood that the invention is not limited to these precise forms of apparatus, and that changes may be made therein without departing from the scope of the invention which is defined in the appended claims.

What is claimed is:

1. In a papermaking machine, a flow passage for supplying stock to a forming wire, a series of spaced vertical plates extending across said passage with the plates extending parallel to the stock flow and in a zone just ahead of the position of engagement of the stock with the forming wire, a common connecting means at one side of said series rigidly attached to only one side edge of each of said plates, the projecting portions of the plates being unsupported and the terminal edges of the plates remote from said connecting means being located just within the limits of the body of stock flowing past said plates and the upstream edges of said plates extending at a small angle to the direction of stock flow towards the plates to prevent fiber lodgement, resilient filler pieces between the outer sides of the plates at the ends of said series and the adjacent portions of said flow passage and substantially co-

extensive with the end plates of the series, means supporting said connecting means for movement transversely of the direction of stock flow past said plates, and means for reciprocating said plates transversely of the direction of stock flow past said plates.

2. In a papermaking machine, a flow passage for supplying stock to a forming wire, a series of spaced vertical plates extending across said passage with the plates extending parallel to the stock flow and in a zone just ahead of the position of engagement of the stock with the forming wire, a common connecting means at only one side of said series attached to only one side edge of each of said plates, sealing means extending between said connecting means and the portions of the flow passage adjacent thereto, the terminal edges of the plates remote from said connecting means being located just within the limits of the body of stock flowing past said plates and the upstream edges of said plates extending at a small angle to the direction of stock flow towards the plates to prevent fiber lodgement, resilient filler pieces between the outer sides of the plates at the ends of said series and the adjacent portions of said flow passage and substantially coextensive with the end plates of the series, means supporting said connecting means for movement transversely of the direction of stock flow past said plates, and means for reciprocating said plates transversely of the direction of stock flow past said plates.

3. In a papermaking machine, a flow passage for supplying stock to a forming wire, a series of spaced vertical plates extending across said passage with the plates extending parallel to the stock flow and in a zone just ahead of the position of engagement of the stock with the forming wire, a common connecting means at only one side of said series rigidly attached to only one side edge of each of said plates, the upstream edges of said plates extending at a small angle to the direction of stock flow towards the plates to prevent fiber lodgement, a support, rubber blocks on said support below said connecting means supporting said connecting means for movement transversely of the direction of stock flow past said plates, rubber sealing means between said connecting means and said support, resilient filler pieces between the outer sides of the end plates of said series and the portions of the flow passage adjacent thereto and substantially coextensive with the end plates of the series, and means for reciprocating said plates transversely of the direction of stock flow past said plates.

4. In a papermaking machine of the cylinder mold type, a flow passage for supplying stock to a forming wire and including a supporting wall, a series of spaced vertical plates extending across said passage with the plates extending parallel to the stock flow and arranged above said wall and projecting laterally from said wall into close proximity to the cylinder mold, a common connecting means at the bottom of said series attached rigidly to only the bottom edge of each of said plates and forming the sole support for said plates, compressible resilient filler pieces between the outer sides of the plates at the end of said series and the adjacent portions of said flow passage and substantially coextensive with the end plates of the series, and sealing means extending between said connecting means and said supporting wall, the upper edges of the plates being located just below the upper level of stock flowing past said plates and the upstream edges of said plates extending at a small angle to the direction of stock flow towards the plates to prevent fiber lodgement, means supporting said connecting means on said wall for movement transversely of the direction of stock flow past said plates, and means for reciprocating said plates transversely of the direction of stock flow past said plates.

HERMAN L. KUTTER.