US00D575136S

(12) United States Design Patent

Hoernig

(10) Patent No.: US D575,136 S

(45) Date of Patent: ** Aug. 19, 2008

(54) **PULL**

(75) Inventor: **Victor Hoernig**, Lowell, IN (US)

(73) Assignee: **Liberty Hardware Mfg. Corp.**, Winston-Salem, NC (US)

(**) Term: **14 Years**

(21) Appl. No.: **29/291,655**

(22) Filed: **Sep. 7, 2007**

(51) **LOC (8) Cl.** **08-06**

(52) **U.S. Cl.** **D8/316**; D8/305

(58) **Field of Classification Search** ..... D8/300, D8/302, 305, 311–321, DIG. 1, DIG. 2, DIG. 10; D7/393, 394; D3/318; D6/549, 524, 533, D6/550; D23/250–254, 303, 305; D15/89; 292/347, 336.3; 211/16, 182; 220/752–754; 16/441, 118, 110 R, 111 R, DIG. 19, DIG. 30, 16/110.1, 412, 414–420, 443–446

See application file for complete search history.

(56) **References Cited**

U.S. PATENT DOCUMENTS

D139,316 S * 10/1944 Prooyen D8/318
D186,811 S * 12/1959 Hillgren D8/316
D194,968 S * 4/1963 Stelma D8/317
D204,541 S * 4/1966 Kawaguchi et al. D8/317
D205,349 S * 7/1966 Clayton D8/316
D208,689 S * 9/1967 Morgan D8/317
D231,323 S * 4/1974 James D8/318
D246,950 S * 1/1978 Palm, Jr. D8/316
D272,800 S * 2/1984 Pawlow D8/318
D274,035 S * 5/1984 Pawlow D8/316
D315,488 S * 3/1991 Tremonti D8/316
D326,991 S * 6/1992 Bishop D8/317
D327,196 S * 6/1992 Crook et al. D6/549
D388,272 S * 12/1997 Moore D6/549
D409,867 S * 5/1999 Sweetman D6/523
D418,803 S * 1/2000 Klimenko D12/316
D423,854 S * 5/2000 Roth et al. D6/549
D431,445 S * 10/2000 Short D8/316
D431,996 S * 10/2000 Short D8/316
D451,782 S * 12/2001 Dewald D8/317
D468,145 S * 1/2003 Ouyoung D6/549
D498,406 S * 11/2004 Adler D8/316
D505,312 S * 5/2005 Bacon D8/316
D511,672 S * 11/2005 Fields D8/317
D512,298 S * 12/2005 Fields D8/317
D513,961 S * 1/2006 Fields D8/317
D540,090 S * 4/2007 Chen D6/549
D542,118 S * 5/2007 Fields D8/317
D543,436 S * 5/2007 Ricereto D8/316
D552,447 S * 10/2007 Krumpe et al. D8/316
D552,958 S * 10/2007 Krumpe et al. D8/316

* cited by examiner

Primary Examiner—Stella M. Reid
Assistant Examiner—Mark A Goodwin
(74) *Attorney, Agent, or Firm*—Edgar A. Zarins; Lloyd D. Doigan

(57) **CLAIM**

The ornamental design for a pull, as shown and described.

DESCRIPTION

FIG. **1** is a side front perspective view of a pull showing my new design;

FIG. **2** is a side view thereof, the opposite side being a mirror image of the side shown;

FIG. **3** is a front elevational view thereof; and,

FIG. **4** is an end view thereof, the opposite end being a mirror image of the end shown.

1 Claim, 1 Drawing Sheet

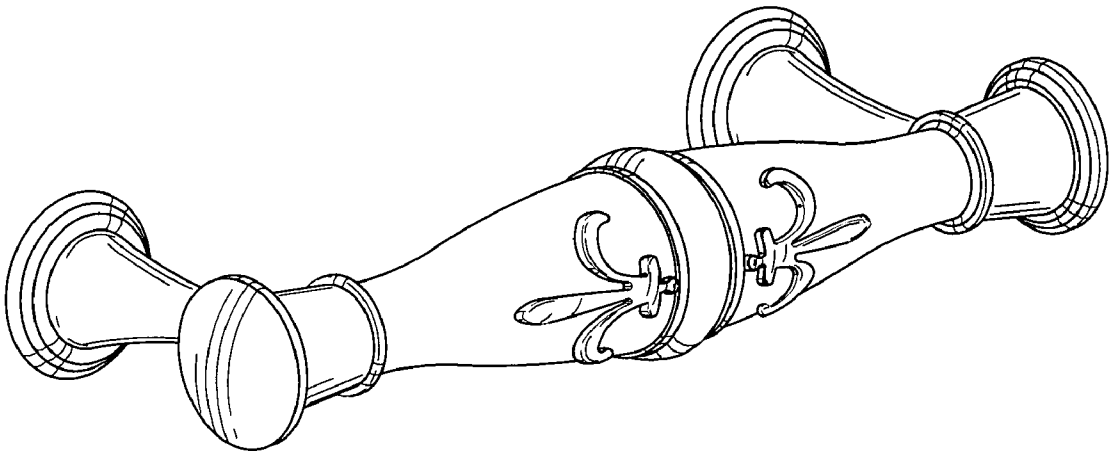

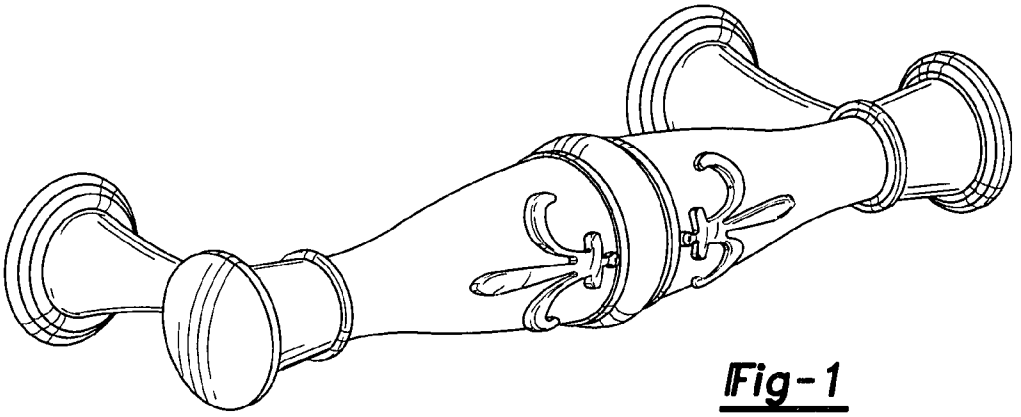

Fig-1

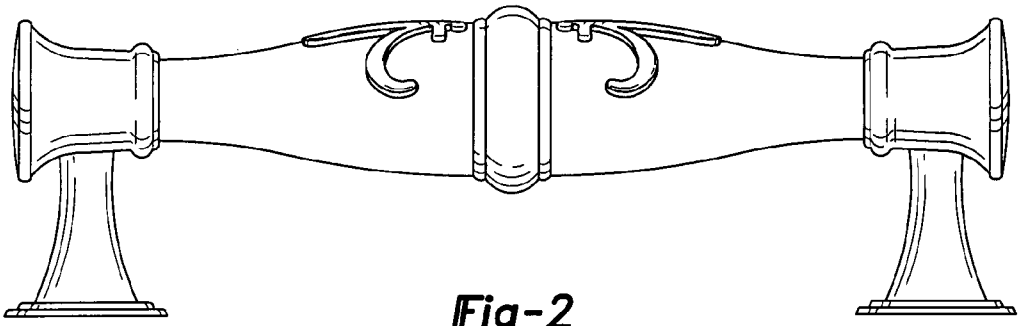

Fig-2

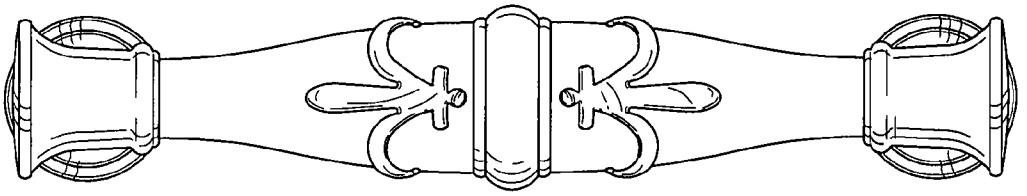

Fig-3

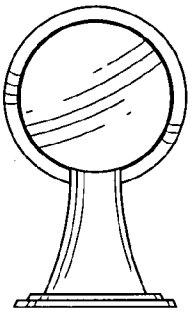

Fig-4