Office de la Propriété Intellectuelle du Canada
Un organisme d'Industrie Canada

Canadian Intellectual Property Office
An agency of Industry Canada

CA 2819577 A1 2012/01/12

(21) 2 819 577

(12) DEMANDE DE BREVET CANADIEN
CANADIAN PATENT APPLICATION

(13) A1

(86) Date de dépôt PCT/PCT Filing Date: 2011/07/06
(87) Date publication PCT/PCT Publication Date: 2012/01/12
(85) Entrée phase nationale/National Entry: 2012/12/17
(86) N° demande PCT/PCT Application No.: SE 2011/050917
(87) N° publication PCT/PCT Publication No.: 2012/005675
(30) Priorité/Priority: 2010/07/06 (SE1000732-6)

(51) Cl.Int./Int.Cl. *E01B 19/00* (2006.01), *E01B 27/04* (2006.01), *E01B 7/20* (2006.01)

(71) Demandeur/Applicant:
FLYGARE, JOAKIM, SE

(72) Inventeur/Inventor:
FLYGARE, JOAKIM, SE

(74) Agent: NA

(54) Titre : AIGUILLAGE FERROVIAIRE ANTIBLOCAGE ET PROCEDE DE REALISATION D'AIGUILLAGES FERROVIAIRES ANTIBLOCAGE

(54) Title: JAM-RESISTANT RAILWAY JUNCTION AND METHOD OF MAKING JAM-RESISTANT RAILWAY JUNCTIONS

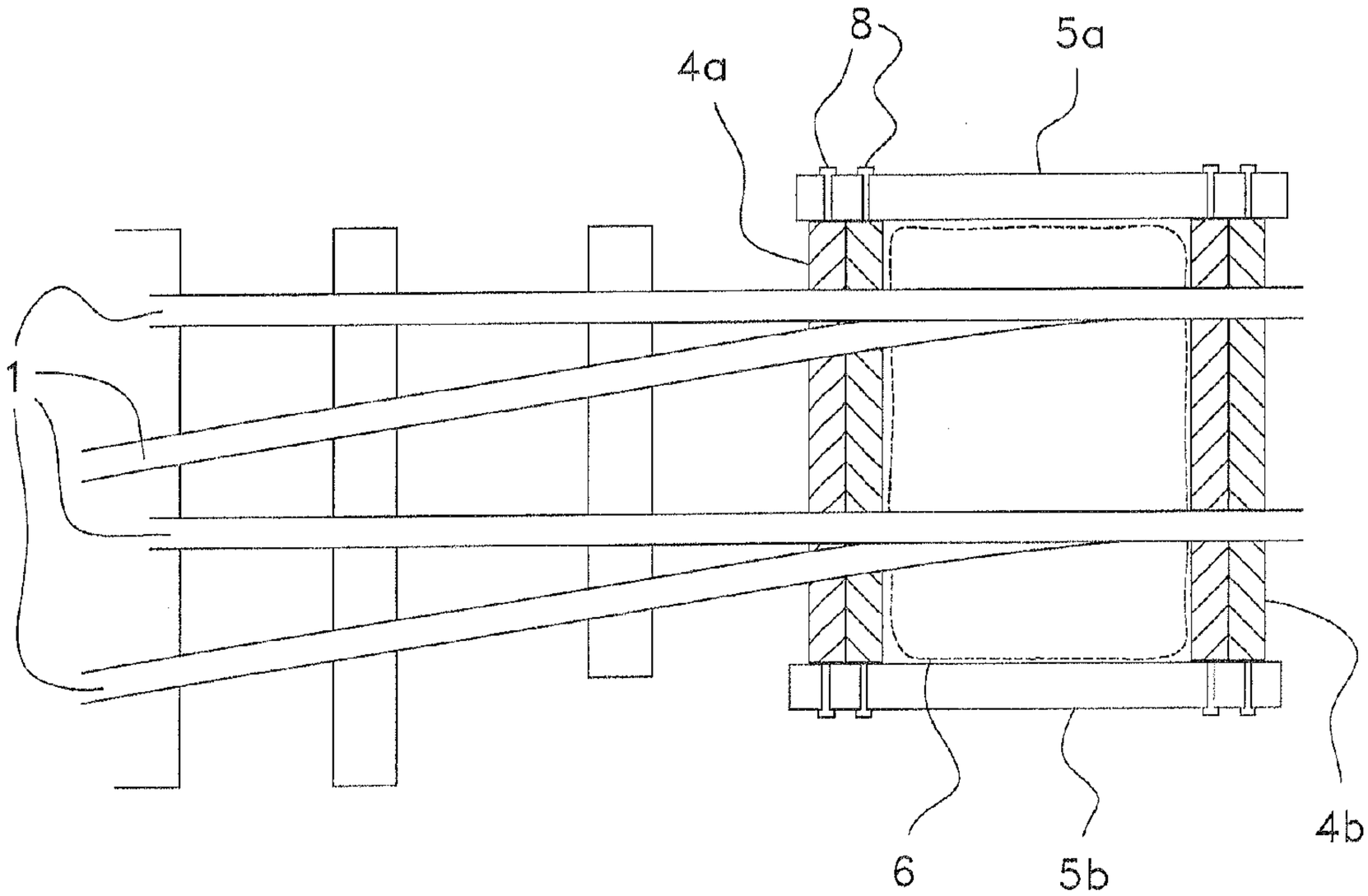

Fig. 2

(57) Abrégé/Abstract:
Railway junction arrangements and methods and components for making such railway junction arrangements, wherein the railway junction arrangement comprises a set of stationary rails and a set of movable rails (1) and a region where said movable rails can be moved to come into contact with said stationary rails wherein a debris-receiving chamber (6) is provided in said region.

(12) INTERNATIONAL APPLICATION PUBLISHED UNDER THE PATENT COOPERATION TREATY (PCT)

(19) World Intellectual Property Organization
International Bureau

(43) International Publication Date
12 January 2012 (12.01.2012)

PCT

(10) International Publication Number
WO 2012/005675 A1

(51) International Patent Classification:
E01B 19/00 (2006.01) *E01B 27/04* (2006.01)
E01B 7/20 (2006.01)

(21) International Application Number:
PCT/SE2011/050917

(22) International Filing Date:
6 July 2011 (06.07.2011)

(25) Filing Language: English

(26) Publication Language: English

(30) Priority Data:
1000732-6 6 July 2010 (06.07.2010) SE

(72) Inventor; and
(71) Applicant : **FLYGARE, Joakim** [SE/SE]; Tunagatan 80, S-753 37 Uppsala (SE).

(74) Agent: **BRANN AB**; Box 12246, S-102 26 Stockholm (SE).

(81) Designated States *(unless otherwise indicated, for every kind of national protection available)*: AE, AG, AL, AM, AO, AT, AU, AZ, BA, BB, BG, BH, BR, BW, BY, BZ, CA, CH, CL, CN, CO, CR, CU, CZ, DE, DK, DM, DO, DZ, EC, EE, EG, ES, FI, GB, GD, GE, GH, GM, GT, HN, HR, HU, ID, IL, IN, IS, JP, KE, KG, KM, KN, KP, KR, KZ, LA, LC, LK, LR, LS, LT, LU, LY, MA, MD, ME, MG, MK, MN, MW, MX, MY, MZ, NA, NG, NI, NO, NZ, OM, PE, PG, PH, PL, PT, RO, RS, RU, SC, SD, SE, SG, SK, SL, SM, ST, SV, SY, TH, TJ, TM, TN, TR, TT, TZ, UA, UG, US, UZ, VC, VN, ZA, ZM, ZW.

(84) Designated States *(unless otherwise indicated, for every kind of regional protection available)*: ARIPO (BW, GH, GM, KE, LR, LS, MW, MZ, NA, SD, SL, SZ, TZ, UG, ZM, ZW), Eurasian (AM, AZ, BY, KG, KZ, MD, RU, TJ, TM), European (AL, AT, BE, BG, CH, CY, CZ, DE, DK, EE, ES, FI, FR, GB, GR, HR, HU, IE, IS, IT, LT, LU, LV, MC, MK, MT, NL, NO, PL, PT, RO, RS, SE, SI, SK, SM, TR), OAPI (BF, BJ, CF, CG, CI, CM, GA, GN, GQ, GW, ML, MR, NE, SN, TD, TG).

Declarations under Rule 4.17:

— *of inventorship (Rule 4.17(iv))*

Published:

— *with international search report (Art. 21(3))*

(54) Title: JAM-RESISTANT RAILWAY JUNCTION AND METHOD OF MAKING JAM-RESISTANT RAILWAY JUNCTIONS

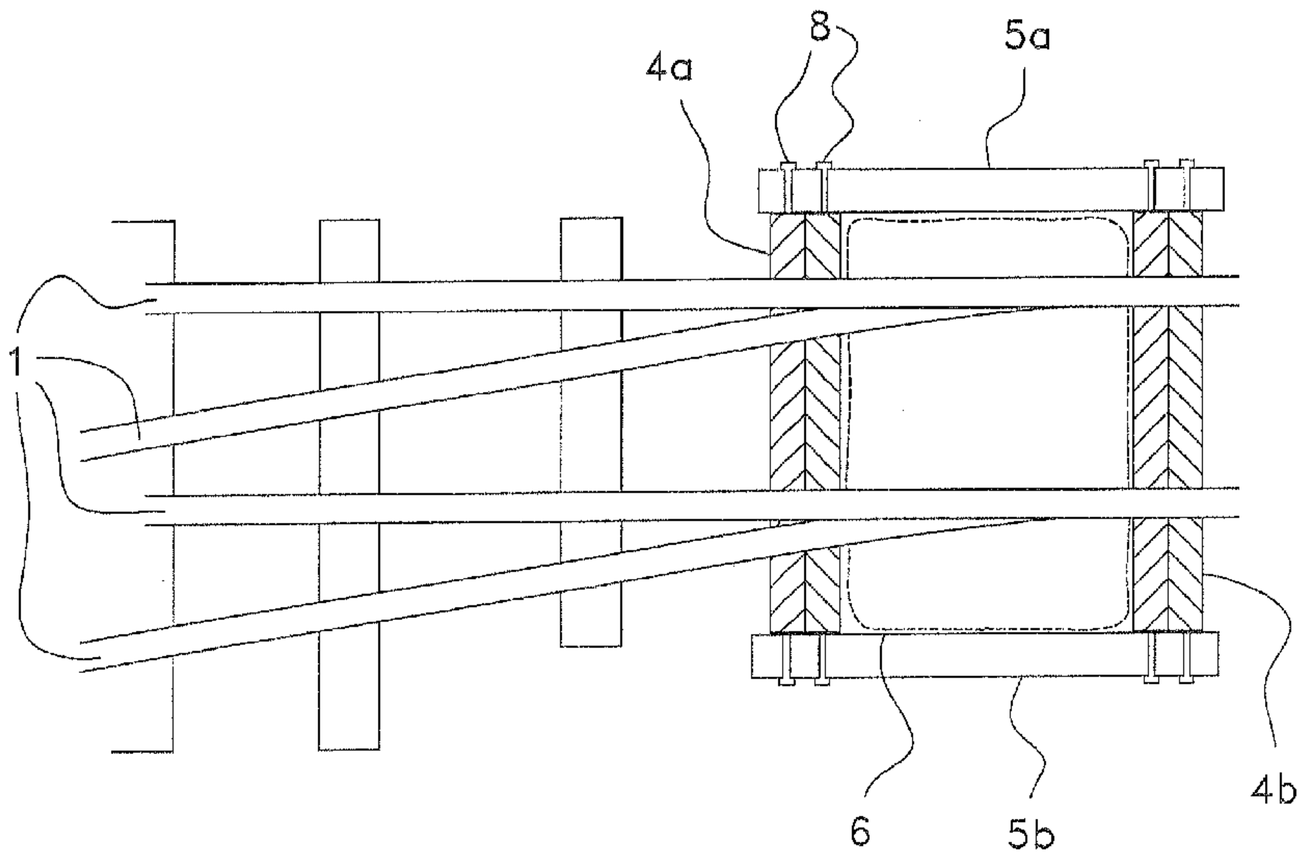

Fig. 2

(57) **Abstract**: Railway junction arrangements and methods and components for making such railway junction arrangements, wherein the railway junction arrangement comprises a set of stationary rails and a set of movable rails (1) and a region where said movable rails can be moved to come into contact with said stationary rails wherein a debris-receiving chamber (6) is provided in said region.

WO 2012/005675 A1

Title of the Invention

Jam-resistant railway junction and method of making jam-resistant railway junctions

Background of the Invention

A railroad switch or turnout or (set of) points is a mechanical installation enabling railway trains to be guided from one track (for example the mainline track) to another diverging track (for example to a siding) at a railway junction.

The switch consists of the pair of linked tapering rails, known as “points” or (“switch rails” or “point blades”), lying between the diverging outer rails (called the “stock rails”). These points can be moved laterally into one of two positions to direct a train coming from the narrow end of the points toward the straight-ahead through path or the diverging path (in which case the points are in contact with the stock rails).

For safety reasons automatically operated switches generate a warning signal if the distance between the desired position of a point blade and its actual position is more than a pre-determined amount, typically approximately 3 mm. This warning signal is perceived as a failure of the points and traffic over the points is restricted or prevented until the points have been checked and any faults remedied. Such faults can occur when snow, ice, leaves and other material such as sand, gravel, shingle, earth, ballast, etc, (called “debris” for brevity in the following) accumulates between, or on, the points and stock rails and jams them in an incorrect position or prevents them from taking up a desired position. Additionally, compacted debris can cause the train wheels to jump over the compacted debris, and the subsequent impact caused by the wheel landing on the track can severely damage or even break the rail. Especially in cold conditions, snow and ice packed between the moving blade and the fixed rail and/or in the operating linkage can prevent the moving blade moving to its desired position and thereby prevent the correct operation of switches. In the past, people were employed by railway companies to keep the switches clear by sweeping the snow away, and this is still used in some countries, especially on minor lines. Some were provided with gas torches for melting ice. More recently, switches have had heaters installed in the vicinity of the points so that the temperature of the rails in these areas can be kept above freezing. The

heaters may be powered by gas or electricity. In cases where gas or electric heaters are unable to be used due to logistical or economical constraints anti-icing chemicals can be applied to create a barrier between the metal surfaces of the switch and ice. Such heating methods are expensive to install and operate. While these methods can be effective against snow and ice, they are less successful when the snow or ice is contaminated with solid debris such as leaves, sand or gravel and are often unable to cope with the large quantities of ice and snow which fall from a train due to the vibrations caused by riding over the points and which fall directly on the points. Heater also have a poor or even negative function when very low temperatures are encountered as inadequate drainage of the melt water can lead to it refreezing and the build-up of ice. Such built-up ice can be very difficult to remove.

In the following, unless otherwise stated, the term "longitudinal" is a direction parallel to the longitudinal axis of a pair of rails, the term "transverse" is perpendicular to the longitudinal axis of a pair of rails, the expression "nominal" when related to the level of ballast or a railway bed is intended to mean the level which the ballast or railway bed is specified to have in the region of the railway junction outside the area when the present invention is provided. Thus, for example, if the ballast or railway bed is specified to have a level which is, for example 5 cm below the bottom of the rails then the "nominal level" of the ballast or railway bed is 5 cm below the bottom of the rails.

Description of the Invention

An object of the invention is to provide a railway junction which comprises a set of points, which railway junction is more resistant to jam than previous railway junctions.

This is achieved by providing a chamber under the railway junction which can receive debris which otherwise could accumulate on the points, operating linkage and sleepers supporting the points and thereby cause the points to fail. Further advantages are obtained by providing sleepers which are shaped or surface treated or provided with mechanical or thermal means to reduce the accumulation of debris upon them and/or to remove accumulated debris. Other advantages are achieved by providing cassettes for collecting debris.

Brief Description of the Drawings

Figure 1 shows schematically a lateral view of a portion of a railway junction including a set of points in accordance with a first embodiment of the present invention.

Figure 2 shows a plan view of the railway junction of figure 1.

Figure 3 shows schematically a perspective view of a jam-reducing sleeper in accordance with the present invention.

Figures 4a) and 4b) show respectively plan and sectional schematic views of a portion of a railway junction in accordance with a further embodiment of the present invention.

Figures 5a) and 5b) show respectively plan and sectional schematic views of a portion of a railway junction in accordance with another further embodiment of the present invention.

Figures 6a) and 6b) show respectively plan and sectional schematic views of a portion of a railway junction in accordance with yet another further embodiment of the present invention.

Figures 7a) and 7b) show respectively plan and sectional schematic views of a portion of a railway junction in accordance with a further embodiment of the present invention.

Figures 8a) and 8b) show respectively plan and sectional schematic views of a portion of a railway junction in accordance with a further embodiment of the present invention. Figure 8c) shows schematically in perspective an embodiment of a debris-receiving cassette and removable liners in accordance with the present invention.

Figures 9a) and 9b) show respectively plan and sectional schematic views of a portion of a railway junction in accordance with a further embodiment of the present invention.

Figures 10a) and 10b) show respectively plan and sectional schematic views of a portion of a railway junction in accordance with a further embodiment of the present invention. Figure 10c) shows schematically in perspective a further embodiment of a debris-receiving cassette in accordance with the present invention.

Figures 11a) to 11d) show schematically examples of profiles of longitudinal beams in accordance with the present invention.

Figure 12a) and 12b) show schematically in cross-section examples of devices for emptying chambers in accordance with the present invention.

Detailed Description of the Invention

In the following, for the sake of clarity of illustration, the well–known operating mechanisms for operating a set of points are omitted from the figures.

Figure 1 shows a lateral cross-sectional view of a portion of a railway junction 1 provided with rails and sleepers according to a first embodiment of the present invention. The rails extend over a row of conventional sleepers 3 which surround two jam-reducing sleepers 4a-4b in accordance with the present invention. Both types of sleepers rest on a bed of railway ballast 2. The distance between the upper surface of the ballast and the undersides of the rails is nominally x cm in the region of the conventional sleepers, for example x may be 5 or 7.5 or even 10 cm, the height being specified according to circumstances and taking into account the terrain, . Preferably the jam-reducing sleepers are taller than the conventional sleepers which have a height of Z at the contact surface for the rails. Typically the height Z of a conventional sleeper is 125 mm or 150 mm. In the event that the rails are supported on rail chairs then the height of the rail chairs above their contact surface on the sleeper is to be included in dimension Z. Preferably the jam-reducing sleepers are Y cm taller than the conventional sleepers, where Y preferably is greater than 10 cm and less than 60 cm. More preferably Y is greater than 20 cm and less than 40 cm as this range allows a good compromise between allowing a deep debris-receiving chamber as described below while maintaining a stable support for the rails. The use of a pair of jam-reducing sleepers arranged adjacent each other allows ballast to be excavated from region between the two jam-reducing sleepers forming a chamber 6 of depth X below the points. The ballast can be excavated down to the bottom of the jam-reducing sleepers – a total depth of (Y + Z) cm from the bottom of the rails. This means that the distance (X + x) between the undersides of the rails and the upper surface of the ballast in the chamber 6 between the jam-reducing sleepers is greater than that the distance x between the upper surface of the ballast in the vicinity of the conventional sleepers. This chamber 6 which lies below the nominal level of the ballast arranged by the neighbouring conventional sleepers is able to receive a proportionally larger volume of snow or other debris than before it fills up and hence delays the moment when the build up of debris risks blocking or jam the points. Theoretically it will take (X+x)/x times longer to fill up than the conventional gap between the bottom of the rails and the upper surface of the ballast, thus allowing longer periods of time to elapse between maintenance.

Alternatively the chamber may be formed without the use of jam-reducing sleepers. In this case the conventional sleepers are retained and level of the ballast between the sleepers is at

least partly lowered to a level which is lower than the nominal level. For example if the ballast on a 125 mm thick sleeper normally nominally extends to within x cm of its upper surface then in the chamber the level could be as low as the base of the sleeper, i.e. 125 mm below its upper surface or as high as (x + 1) cm below it.

The jam-reducing sleepers can be held together by longitudinal beams 5 which provide the pair of jam-reducing sleepers with a greater resistance to the forces exerted on them by the rails that otherwise would be possible. As the jam-reducing sleepers are higher than the corresponding conventional sleepers they can more easily tip over when forces are applied to them in the longitudinal direction of the rails which occur, for example, when a train applies its brakes. In the event that such forces are expected to be high, the chamber may be excavated only partially instead of to the full depth of the jam-reducing sleepers thereby leaving a stabilizing layer of ballast at the bottom of the chamber between the jam-reducing sleepers.

Openings are exposed between the upper surfaces of the longitudinal beams 5 and the undersides of the rails through which snow or other debris which accumulates in chamber 6 can be removed from the chamber. Prior art literature describes various arrangements for melting or blowing snow away from the rails and these can be used with the jam-reducing sleepers and chambers according to the invention and are suitable for fitting in the chamber which is formed under the rails by the jam-reducing sleepers, but possibly the most important feature of the jam-reducing sleepers is that, compared to conventional prior art railway junctions, by permitting the formation of a stable chamber under the rails, they passively allow an increased volume of snow and other debris to fall below the rails, thereby prevent them from becoming jammed or contaminated as quickly as conventional railway junctions do, without requiring any other accessories or consuming power.

Figure 2 shows a plan view of a set of points in a portion of a railway junction comprising four rails 1 with sleepers 4a-4b in accordance with the present invention. In a set of points there is a stationary set of rails and a set of merging rails which comprises a movable portion which can be moved to be in contact with the stationary rails or to lie a distance away from them. Snow and other debris which accumulates in the space which can be formed between

the movable portions of the merging rails and stationary rails can be packed together and prevent the movable rails from coming into contact with the stationary rails. This type of set of points failure occurs regularly in the winter and the most common way of correcting the problem is to manually remove snow or debris from the points. Snow and ice can sometimes be removed by manual heating but this method does not work for all types of debris and temperature conditions.

In this embodiment of the invention the jam-reducing sleepers 4a-b and longitudinal beams 5a-b enclose a debris-receiving chamber under the rails which extends laterally at least to one side and preferably to both sides of the rails so that a space is provided which allows debris to fall down from the rails. The chamber is preferably dimensioned so that it extend under the fixed rails and the movable portion of the movable rails independently of whether the set of points is in the open or closed state. The surfaces of the stationary rails and the movable portions of the merging rails are immediately above the chamber so that the risk that they should jam is reduced. As can be seen clearly in figure 3, and also in figures 1 and 2, the upper surfaces of the jam-reducing sleepers which are exposed between, and outside of, the rails are convex with peaks parallel with the longitudinal axis of the sleepers. The convex profile means that snow and other debris which falls onto the upper surface of the sleepers slides off the sleepers and into the chamber below. The figures also show fastening means such as bolts 8 which fasten the longitudinal beams to the jam-reducing sleepers.

Figure 3 shows a separate jam-reducing sleeper 4 in accordance with the present invention in which portions of two rails 1a, 1b are shown by dotted lines. The jam-reducing sleepers have an elongated lower part with a quadratic cross-section on the upper surface of which three prisms with substantially triangular cross-sections 11. Preferably the triangular cross-sections have rounded peaks which are arranged with their longitudinal axes substantially parallel with the longitudinal axis of the sleeper. The triangular portions are intended to let debris slide off them and can be complemented with appropriate surface treatment, e.g. polishing or low friction coatings, to facilitate that debris slides off them. Dark or black coloured surfaces which absorb sunshine help heat up the sleepers and aid the melting of snow and ice without the use of external power sources.

Between the three triangular portions there are two portions with upper surfaces, in this example flat upper surfaces, which are intended to receive the rails. These portions are intended to receive rails which extend substantially perpendicular to the longitudinal direction of the sleepers and the sleepers comprised supporting portions 9a-9b which extend from the long sides of the sleepers in the longitudinal direction of the rails and which form widened out support portions between the three triangular portions. Mounting holes 10a, 10b for bolts 8 are provided in appropriate positions in the end faces of the jam-reducing sleepers. These bolts can be used to attach longitudinal beams to the end so that the sleepers are maintained at the correct distance apart and can resistant forces acting in the longitudinal direction of the rails.

Preferably, a resilient mat 7, 7a, 7b, for example a rubber mat, is provided on the underside of the jam-reducing sleepers in order to compensate for the thinner layer of ballast under the sleeper. Compensation for the thinner lay of ballast here can also be obtained by using stabilizing material in the ballast. Such a stabilizing material could be an adhesive material, for example mortar, cement, epoxy resin, adhesive polymers, or the like.

Figures 4a) and 4b) show schematically respectively a plan view and a sectional view along line IV-IV of a portion of a railway junction 41 in accordance with a further embodiment of the present invention. The railway junction includes a set of points comprising a pair of movable rails 43 and a pair of stationary rails 45. These are supported by six sleepers A-F which lie on a railway bed 47. Railway bed 47 is made, for example, of ballast. Sleepers A and B are conventional sleepers of height Z which are extra long in order to be able to provide support for the movable rails as well as the stationary rails. Sleepers C, D and E are arranged below the region of the railway junction where the movable rails can come into contact with the stationary rails. Sleepers C, D and E are jam-reducing sleepers of height X in accordance with the present invention, sleeper C being extra long in order to be able to provide support for the movable rails as well as the stationary rails. Sleepers D and E are of normal length, as is conventional sleeper F. The three jam-reducing sleepers C, D, E are arranged in a row and are joined to each other by longitudinal beams 53, 55 attached to their end faces. Longitudinal beam 53 arranged on the side of the junction away from the movable rails is substantially straight. Longitudinal beam 55 arranged on the side of the junction away under the movable

rails is bent in order to take into account the greater length of sleeper C. An open-topped debris-receiving chamber 57 is formed in the space between jam-reducing sleepers C and D and longitudinal beams 53, 55. The bottom of a debris-receiving chamber can be left uncovered to expose the lowered railway bed surface, or, as shown here, provided with a solid floor 59. A further open-topped debris-receiving chamber 61 is formed is formed in the space between jam-reducing sleepers D and E and longitudinal beams 53, 55. This chamber 61 has a perforated floor 63 which allows liquids to drain from the chamber. Chambers 57 and 61 can be made in an existing railway junction resting on ballast by:

1) excavating ballast from the same region:

2) removing the conventional sleepers from under the region of the railway junction where the chambers are to be arranged;

3) placing jam-reducing sleepers in said region to compensate for the removal of conventional sleepers and to form the transverse walls of a debris-receiving chamber:

4) joining said sleepers by longitudinal beams to form the longitudinal walls of a debris-receiving chamber:

5) if desired providing the void between the sleepers and longitudinal beams with a floor:

6) packing ballast outside the chambers to support them.

The two longitudinal walls of the chamber are formed of the longitudinal beams 53, 55 made of solid or perforated material which extends between the outer two sleepers, and the bottom of the chamber is provided with a solid or perforated floor. As shown by solid lines in figure 4b) the floor 59, 63 may be horizontal or it may be sloping as shown by the dashed lines.

Figures 5a) and 5b) show schematically respectively a plan and a sectional view along line V-V of a portion of a railway junction in accordance with another further embodiment of the present invention. In this embodiment conventional sleepers are supported on two underlying walls 71, 71' which extend in the longitudinal direction of the stationary rails. Ballast or other rail bed material, if present, is excavated from between walls 71, 71' to form a debris-receiving chamber 73. Each wall can be made of ballast that has stabilized with an adhesive material, such as mortar, cement, epoxy resin, adhesive polymers, or the like, or the wall can be made of concrete, metal, composite material, wood or the like. To prevent the walls collapsing into the chamber, the walls may be attached to the sleepers and/or provided with

braces which extend across the width of the chambers. Each wall extends under at least the sleepers C, D, E which are under the region of the railway junction where the movable rails can come into contact with the stationary rails. Preferably, as shown in figures 5a) and 5b) the walls extend further than this in order to provide an debris-receiving enlarged chamber under the rails. As debris accumulating between sleepers A to C and E to F does not normally risk blocking the set of points, it is possible to place lids 75 (shown by dotted lines) over the chamber in some or all of this area. As the sleepers are positioned on top of the walls they do not form complete transverse bulkheads in the chamber which means that debris that falls into the chamber between sleepers C and E can move under the sleepers B, C and E into the spaces formed between sleepers A to C and E to F.

Chamber 73 can be made in an existing railway junction resting on ballast by:

1) excavating ballast from under the region of the railway junction where the chambers are to be arranged;

2) providing underlying walls to form the sides of a chamber:

3) bracing said walls:

4) refilling voids outside the chamber with ballast.

Figures 6a) and 6b) show schematically respectively a plan and a sectional view along line VI-VI of a portion of a railway junction in accordance with yet another further embodiment of the present invention. In this embodiment of the invention at least one sleeper (the sleeper between sleepers C and E) 9 is absent. This allows the provision of a large debris-receiving chamber which is easier for a person to enter and manually empty and makes it easier to place, maintain and replace equipment used for automatic emptying of the chamber. In order to compensate for the lack of support for the rails caused by the absence of a sleeper, the rails are supported on rail supporting beams 81 positioned on top of conventional and/or jam-reducing sleepers. In order to compensate for the height of the rail supporting beams the sleepers are positioned at a depth in the rail bed which is lower by the height f of the rail supporting beams than the depth of the conventional sleeper A.

Figures 7a) and 7b) show schematically respectively a plan view and a sectional view along line VII-VII of a portion of a railway junction in accordance with a further embodiment of the present invention.

In this embodiment of the invention the ballast surrounding the debris-receiving chambers 171 and 173 is stabilized with an adhesive material, such as mortar, cement, epoxy resin, adhesive polymers, or the like, in a region between the chain lines where chain line K shows the outer boundary of the stabilized ballast and line L' and L'' show the inner boundaries of the stabilized ballast. Preferably the portion of the outer boundary K of the stabilized region which is parallel to the stationary rails is at least half a sleeper width from the centreline of the stationary rails, more preferably at least 10 cm outside of the end of the sleeper resting on the stabilized region and even more preferably at least 20 cm outside of the end of the sleeper resting in it. The longitudinal extent of outer boundary of the stabilized region is sufficient to stabilize the sleepers and the chamber walls and preferably extend more than half the distance from the sleeper it is supporting to the next sleeper. The depth M of stabilized ballast is at least to the same level as the nominal depth N of the bottom of the excavated chamber(s) (the bottom does not have to be stabilized but can be formed of packed or loose ballast or of a plate or net) and preferably is deeper. All the sleepers may be conventional sleepers or, as shown by dotted lines) one or more of sleepers C, D and F may be jam-reducing sleepers of greater depth than conventional sleepers A, B and F.

Figures 8a) and 8b) show schematically respectively a plan view and a sectional view along line VIII-VIII of a portion of a railway junction in accordance with a further embodiment of the present invention. Figure 8c) shows schematically in perspective an embodiment of a cassette and removable liners in accordance with the present invention. In this embodiment of the invention two debris-receiving chambers 181' and 181'' are arranged between jam-reducing sleepers C and D, and two debris-receiving chambers 183' and 183'' are arranged between jam-reducing sleepers D and E. It is conceivable that jam-reducing sleepers are replaced by conventional sleepers in a variation on this embodiment of the invention if the cassettes are made sufficiently strong and rigid enough to maintain their shape themselves during use. Each chamber is positioned under a stationary rail and a movable rail and extends from the region near, at, or beyond, the outer end of sleeper D to a position near, or at, the centreline of the railway track. If the pair of chambers between each pair of sleepers do not meet (for example they do not extend all the way to the region at, or near, the centreline of the railway track) then a separating wall 185 made of stabilised, ballast, rigid beams, concrete or any other suitable material can be placed between them. Chambers 181' and 183' are formed

in accordance with any of the embodiments described above or can be made in the same way as chambers 181'' and 183'' described in the following. These chambers 181'' and 183'' have walls and floors formed by means of open rigid debris-receiving cassettes 187' and 187'' placed in excavations in the railway bed. Preferably the length l of a cassette is the same as or less than the distance d between sleepers, the breadth b of a cassette is greater than the maximum distance r between the inner surface of the stationary rail and the outer surface of the moving rail which it is positioned under, and its depth d is greater than 125 mm, preferably greater than 250 mm and more preferably greater than 500 mm. The floors of a cassette can be solid or perforated.

A debris-receiving cassette can used as an empty vessel or can be provided with one or more liners 191. Preferably each cassette is provided with at least two narrow liners in the form of open-topped boxes which each have a breadth which is the same as, or less than, half the interior breadth of the cassette. As shown in figure 8a) and figure 8c) each cassette contains three liners 191 each of which have a breadth which is one third of the interior breadth of cassette 181'' and 183''. One reason for using a plurality of liners is to facilitate removal of the liners from the cassette when the liners need emptying. Another reason is that, in order to prevent blocking of the points it is necessary only to prevent the accumulation of debris underneath the contact area of the movable and stationary rails. Within reason, debris can be allowed to accumulate elsewhere without risk that it will block the points. One of more of the liners which are not directly under the contact area can be provided with a lid 193 which prevents debris falling vertically into it. In order to allow debris overflowing from a liner to flow into an adjacent liner, the adjacent sides of liners should have an upper edge which is lower than the lid, thereby leaving a gap between the lid and upper edge which debris can flow over.

Lids can be made removable to allow emptying and cleaning.

As can be seen in figure 8a) the rails lying over the cassettes would prevent a liner having the same dimensions as the interior of the cassette from being lifted out of the cassette. However, when narrow liners are provided, it is possible to arrange the chamber so that at least one liner can be removed with being obstructed by a rail. Once this liner has been removed it is possible to slide the second liner into the position previously occupied by the removed liner and then remove the second liner. This can be repeated until all the liners have been removed.

Replacement of the liners is the reverse of removal of liners. Liners preferably have substantially the same height and length as the interior of the cassettes as shown in chamber 181'' in figure 8b). However it is also conceivable that they are tapered (as shown in chamber 183'' in figure 8b), in order to reduce the risk of them becoming jammed in the cassette.

Figures 9a) and 9b) show schematically respectively a plan view and a sectional view along line IX-IX of a portion of a railway junction in accordance with a further embodiment of the present invention. This embodiment is similar to the previous embodiment shown in figures 8a) – 8c) and illustrates different possible debris-receiving cassette cross-section shapes. Cassette 187a has an elliptical cross-section, cassette 187b has a cylindrical cross-section, cassette 187c has an octagonal cross-section while cassette 187d has a hexagonal cross-section. Other cross-sectional shapes are also possible. All cassettes may have substantially vertical sides, or one or more sides may slope in order to provide a cassette with a downward tapering or upward tapering cross section. As shown by dashed lines in figure 9a), longitudinal beams 53, 55 may be provided to stabilise the cassettes. In the event that cassettes are used in conjunction with jam-reducing sleepers or longitudinal beams or the like it may be possible to dispense with the wall(s) of the cassette which would otherwise be adjacent a sleeper or beam or the like, thus resulting in a cassette with one or more open vertical face(s).

Figures 10a) and 10b) show schematically respectively a plan view and a sectional view along line X-X of a portion of a railway junction in accordance with a further embodiment of the present invention. Figure 10c) shows schematically in perspective a further embodiment of a debris-receiving cassette and removable liners in accordance with the present invention. In this embodiment of the invention two debris-receiving chambers 201' and 201'' are arranged between jam-reducing sleepers C and D, and two debris-receiving chambers 203' and 203'' are arranged between jam-reducing sleepers D and E. It is conceivable that jam-reducing sleepers are replaced by conventional sleepers in a variation on this embodiment of the invention if the cassettes are made sufficiently strong and rigid enough to maintain their shape themselves during use. Each chamber is positioned under a stationary rail and a movable rail and extends from the region near, at, or beyond, the outer end of sleeper D to a position near, or at, the centreline of the railway track. If the pair of chambers between each pair of sleepers

do not meet (for example they do not extend all the way to the region at, or near, the centreline of the railway track) then a separating wall 205 made of stabilised, ballast, rigid beams, concrete or any other suitable material can be placed between them. These chambers are similar to the chamber shown in figures 8a)-8b) except that they have walls formed by means of open rigid debris-receiving cassettes 207', 207'', 209', 209'' with downwardly tapered walls placed in excavations in the railway bed. The cassettes may have open bases or solid bottoms. As described previously, a debris-receiving cassette can used as an empty vessel or can be provided with one or more liners 191. Preferably each cassette is provided with at least two narrow liners in the form of open-topped boxes which each have a breadth which is the same as, or less than, half the interior breadth of the cassette. Liners are also tapered to make it easier to break them loose if they should become frozen or jammed into place. One reason for using a plurality of liners is to facilitate removal of the liners from the cassette when the liners need emptying. Another reason is that, in order to prevent blocking of the points it is necessary only to prevent the accumulation of debris underneath the contact area of the movable and stationary rails. Within reason, debris can be allowed to accumulate elsewhere without risk that it will block the points. The cassettes are preferably provided with an opening 210 in the upper face which during use is positioned under the region where the moving rail comes into contact with the stationary rail. The remainder of the upper face is preferably covered with one or more removable lids 213. Each lid can be provided with a lifting handle 215. Preferably the lids 213 are provided with at least one opening 217 into which the tip of a spike or crowbar can be inserted into in order to lever off the lid if it becomes stuck or frozen into place. Optionally a sleeper, or example sleeper D as shown in figures 10a) and 10b) which is adjacent a debris-receiving chamber can be provided with a convex cover 219 which allows debris which falls on it to slide off. Preferably, in order to help remove snow, the cover 219 is made of metal and preferably is provided with heating means which can provide heat to the region which is critical for correct functioning of the points. Cover 219 can be attached to the adjacent chamber(s) to guide debris into the chamber(s).

Longitudinal beams which connect sleepers to each other have the tasks of maintaining the distance between the sleepers, resisting tipping forces on the sleepers, preventing ballast from filing the chamber and in some case supporting the undersides of the railway tracks.

Preferably the longitudinal beams are made of suitably dimensioned plates or beams with upper and/or lower flanges where appropriate. For example as shown in figure 11a)-11d), beams may have I, C, U (regular or inverted as shown by dotted lines), Z , or any other suitable cross-sectional profiles. As an alternative to plates or beams, the sleepers may be supported by ballast stabilized using a ballast adhesive.

All the debris-receiving chambers are preferably provided with means for assisting remove of debris from the chamber. In the case that snow or ice is expected to accumulate in the chamber a heating system can be provided to melt the snow and ice and a drain provided to lead the melt water away. A chamber may be provided with an inlet for compressed air which can be injected into the lower part of the chamber in order to blow accumulated debris out of the open face of the chamber – this is particularly appropriate when the expected debris is snow, leaves, sand or other particulate material which does not form a single solid mass.

While the invention has been illustrated with examples in which a chamber or chambers is/are formed in a railway bed using ballast, it is of course conceivable that the chamber can be formed in any other type of railway bed. Thus, for example, in the event that the rails are laid directly onto a concrete bed then the chamber or chambers can be formed directly in the concrete bed. They can be produced either during construction of the concrete bed (for example by using shuttering to form a void around which concrete is applied) or following construction of the concrete bed (for example by removing concrete in the regions where a chamber is desired). As can be understood from the above there are many different ways of achieving a railway junction in accordance with the present invention in which the frequency of the points in the junction becoming jammed is reduced. All methods in accordance with the present invention for constructing railway junctions in accordance with the present invention comprise the step of providing a debris-receiving chamber under the region of a railway junction where a movable rail can come into contact with a stationary rail, the chamber having a floor which is arranged a level which is below the nominal level of the ballast or railway bed outside of the region of a railway junction where a movable rail can come into contact with a stationary rail. Preferably the chamber has a floor which is at least 1 cm lower than said nominal level, more preferably more than 10 cm lower than said nominal level, even more preferably more than 20 cm below said nominal level.

Preferably the chamber has substantially rigid walls under the region of a railway junction where a movable rail can come into contact with a stationary rail. In some methods for constructing railway junctions in accordance with the present invention at least one wall is formed by a jam-reducing sleeper. In additional methods for constructing railway junctions in accordance with the present invention at least one wall is formed by a box or cassette.

The floors of any chamber in accordance with the present invention can be solid, or perforated to allow water to drain out of it. Thermal means for melting ice and snow in the form of electrical heaters or radiators may also be provided. Chambers may be provided with pneumatic, hydraulic, mechanical, electrical and/or chemical (e.g. salt or antifreeze) means for removing debris from the chamber. For example, as shown in figure 12a) a chamber 121 may by provided with an inflatable bladder 123 (shown deflated in dashed lines) which is connected to the exterior of the rail-bed 125 by an air hose 127 with a compressed air connector 129. Applying compressed air to the bladder via the air hose will cause it to expand and thereby eject from the chamber debris that has collected over it. As shown in figure 12b) a chamber 131 may be provided with a feed-screw drive 133 (driven for example by an electric, pneumatic or hydraulic motor) which can be actuated to remove debris from the chamber via a disposal duct 135 which leads out of the rail bed 137.

It is conceivable that features of the different embodiment of the invention may be combined, for example all types of chambers may be in the form of cassettes whenever it is feasible, and even chambers without cassettes may be provided with one or more liners.

The present invention is not limited to the embodiments described and modifications can be made to them without departing from the scope of the invention as set forth in the appended claims.

Claims

1. Railway junction arrangement comprising a set of stationary rails (45) and a set of movable rails (43) wherein said junction comprises a region where said movable rails can be moved to come into contact with said stationary rails, characterized in that a debris-receiving chamber is provided in said region.

2. Railway junction arrangement in accordance with claim 1 characterised in that chamber is open under said region.

3. Railway junction in accordance with claim 1 or claim 2 characterized in that said region includes at least one sleeper wherein said sleeper has an upper surface which has two rail contact areas separated by a convex portion.

4. Railway junction in accordance with any of the previous claims characterized in that it comprises at least two substantially parallel sleepers connected to each other by longitudinal beams arranged substantially perpendicular to the longitudinal axis of the sleepers and said chamber is positioned between said sleepers and said beams.

5. Railway junction in accordance with claim 4 characterized in that at least one wall of said chamber is formed of a sleeper or a longitudinal beam.

6. Railway junction in accordance with any of the previous claims characterised in that said debris-receiving chamber comprises a debris-receiving cassette (187'', 187'').

7. Railway junction in accordance with any of the previous claims characterised in that said chamber comprises thermal, pneumatic, hydraulic, electrical, chemical, manually operated and/or mechanical means for removing material from said debris-receiving chamber.

8. Debris-receiving cassette for use in a railway junction arrangement according to any of the previous claims characterised in that it comprises one or more removable liners.

9. Debris-receiving cassette according to claim 8 characterized in that it has an open base.

10. Method for making a railway junction arrangement in accordance with any of claims 1-8 characterised by the step of lowering the level of the ballast or railway bed in said region to a level lower than the nominal level of the ballast or railway bed outside of said region in order to form a debris-receiving chamber.

11. Method according to claim 10 wherein said method further comprises the step of providing said chamber with a cassette.

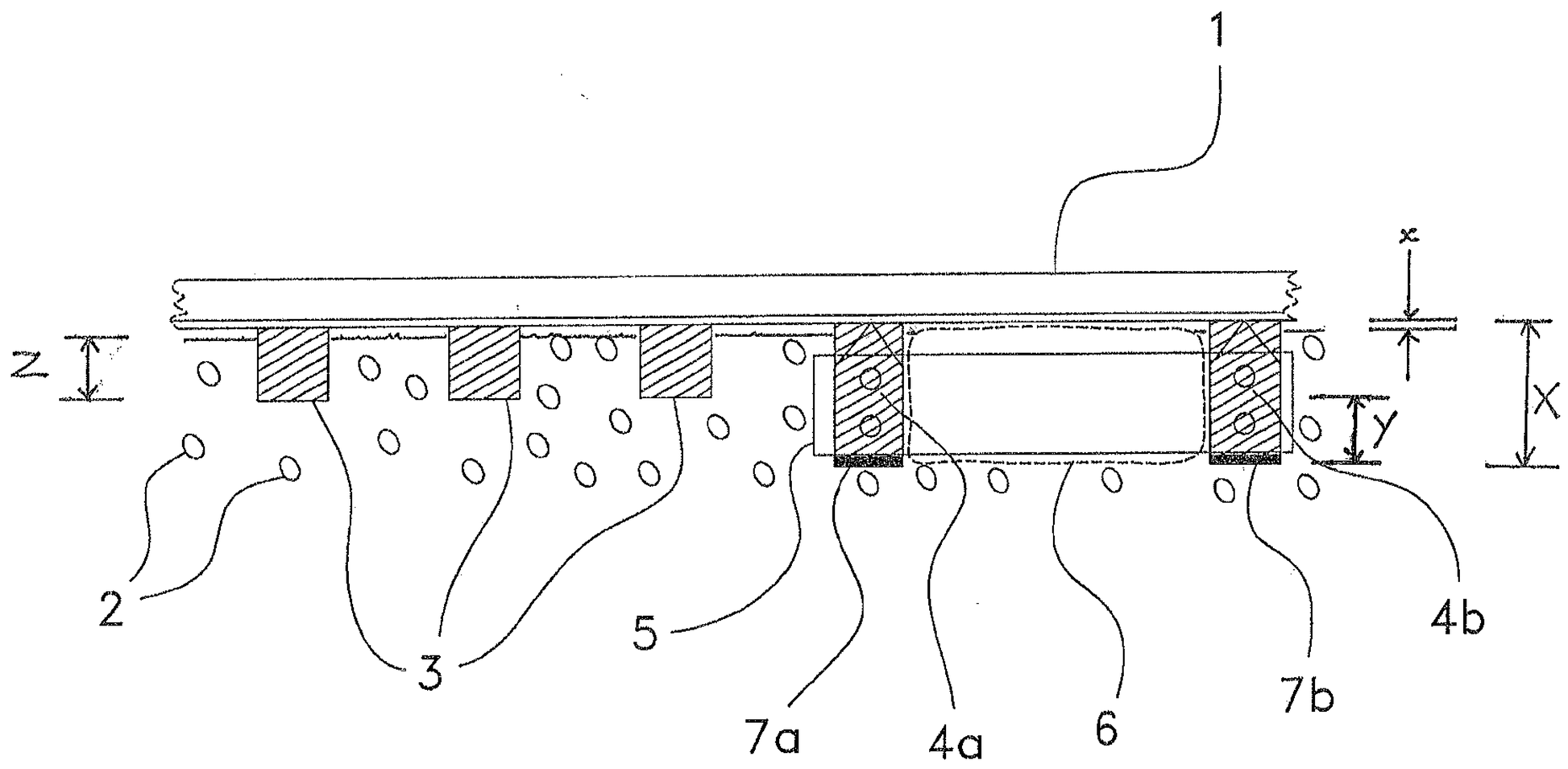

Fig. 1

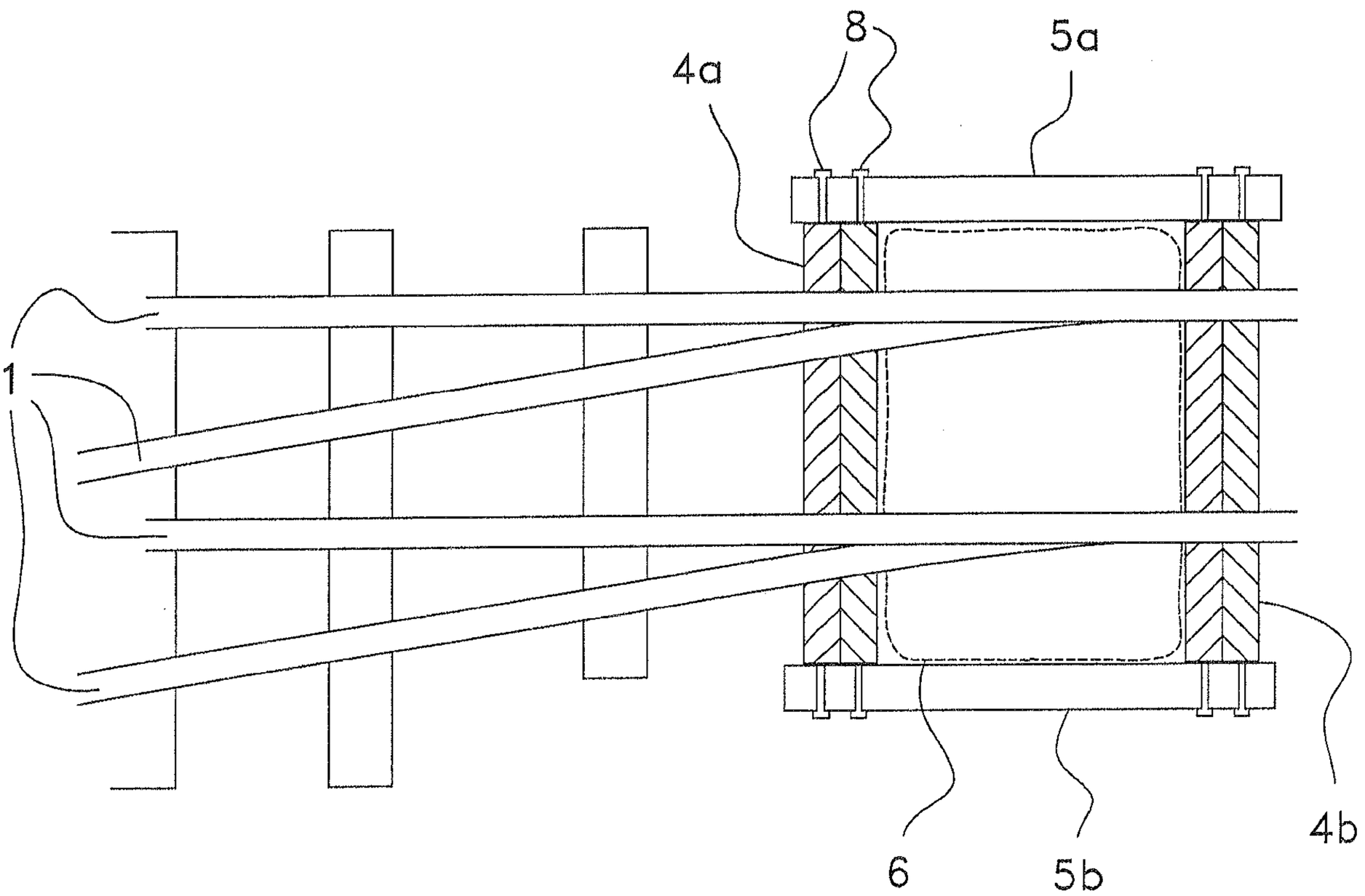

Fig. 2

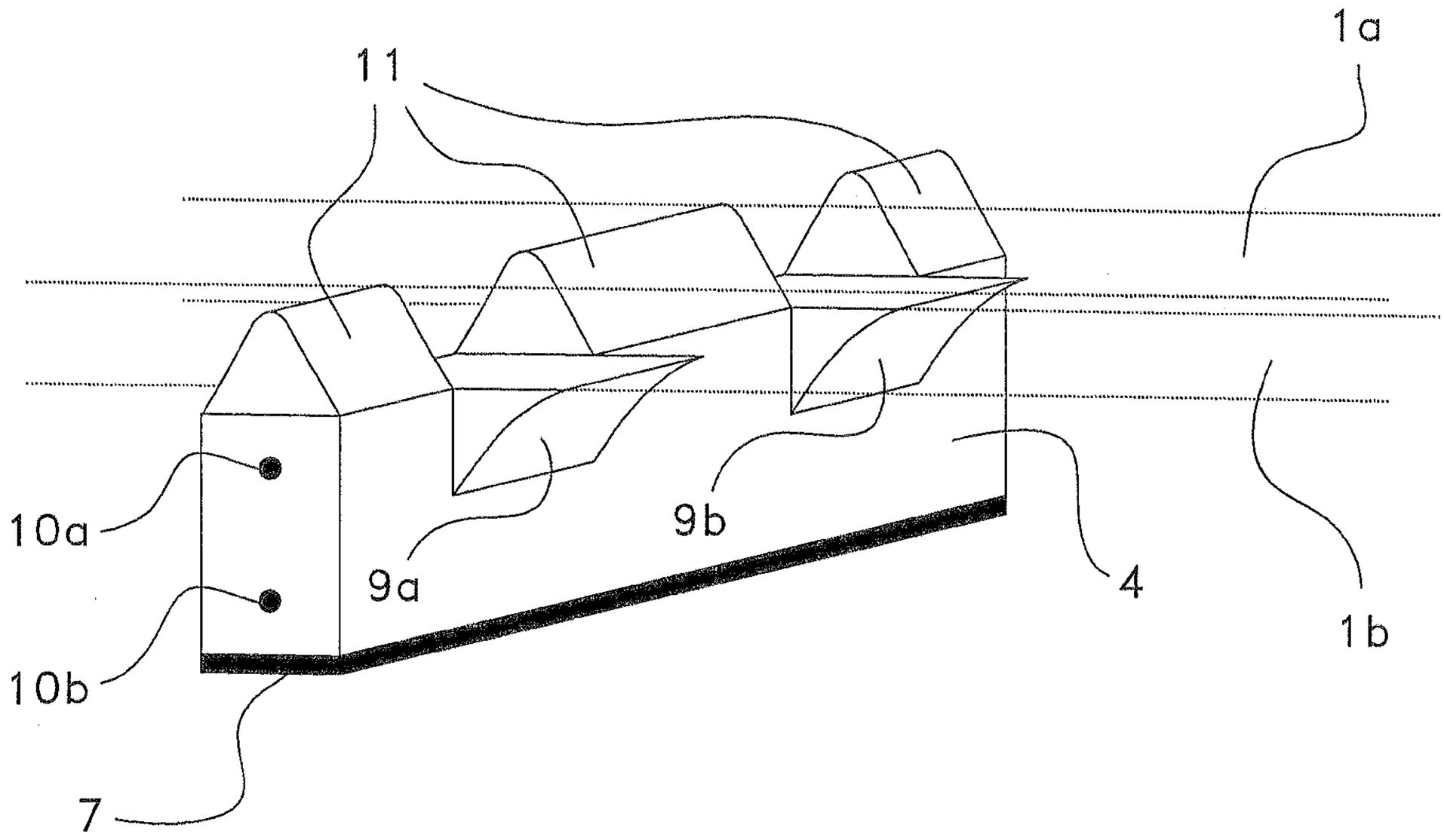

Fig. 3

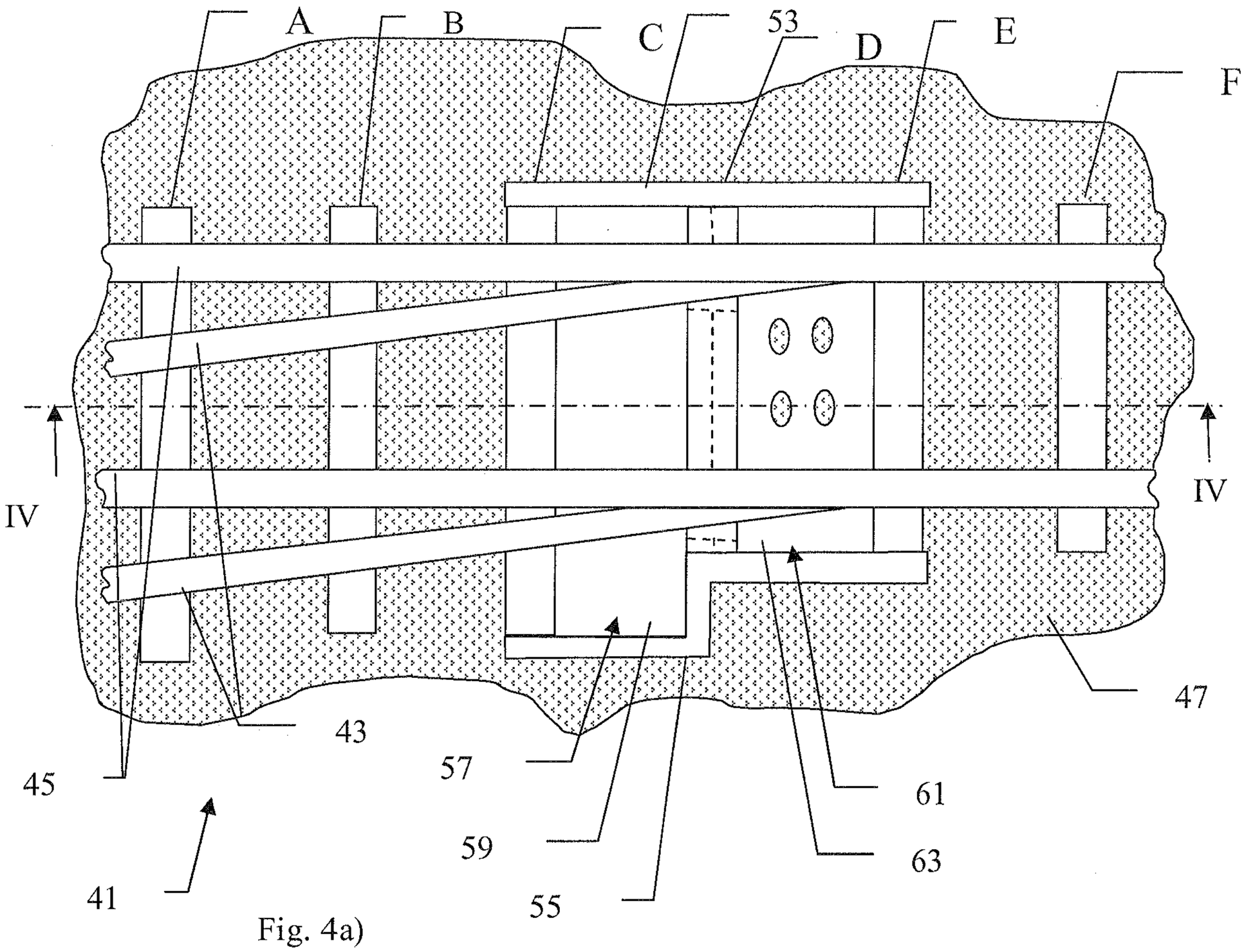

Fig. 4a)

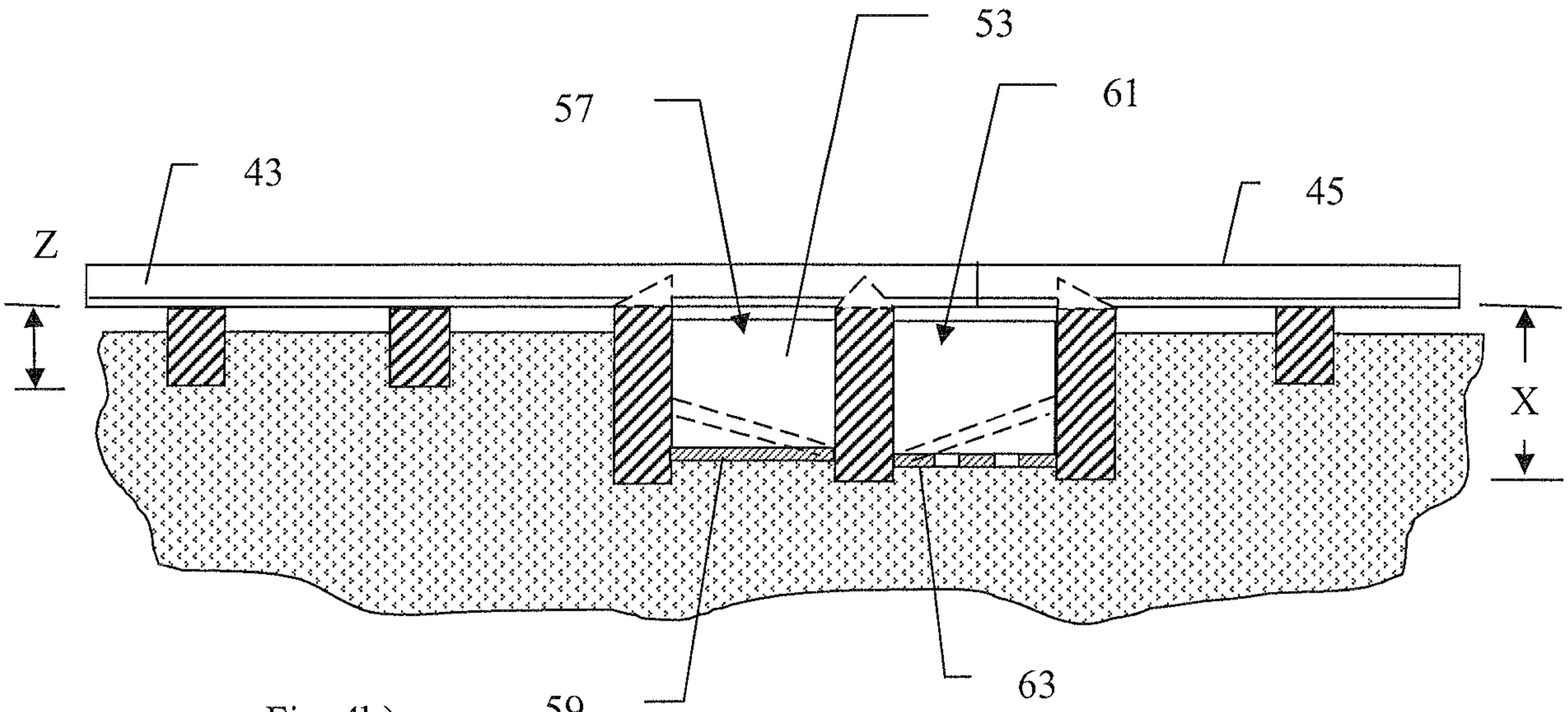

Fig. 4b)

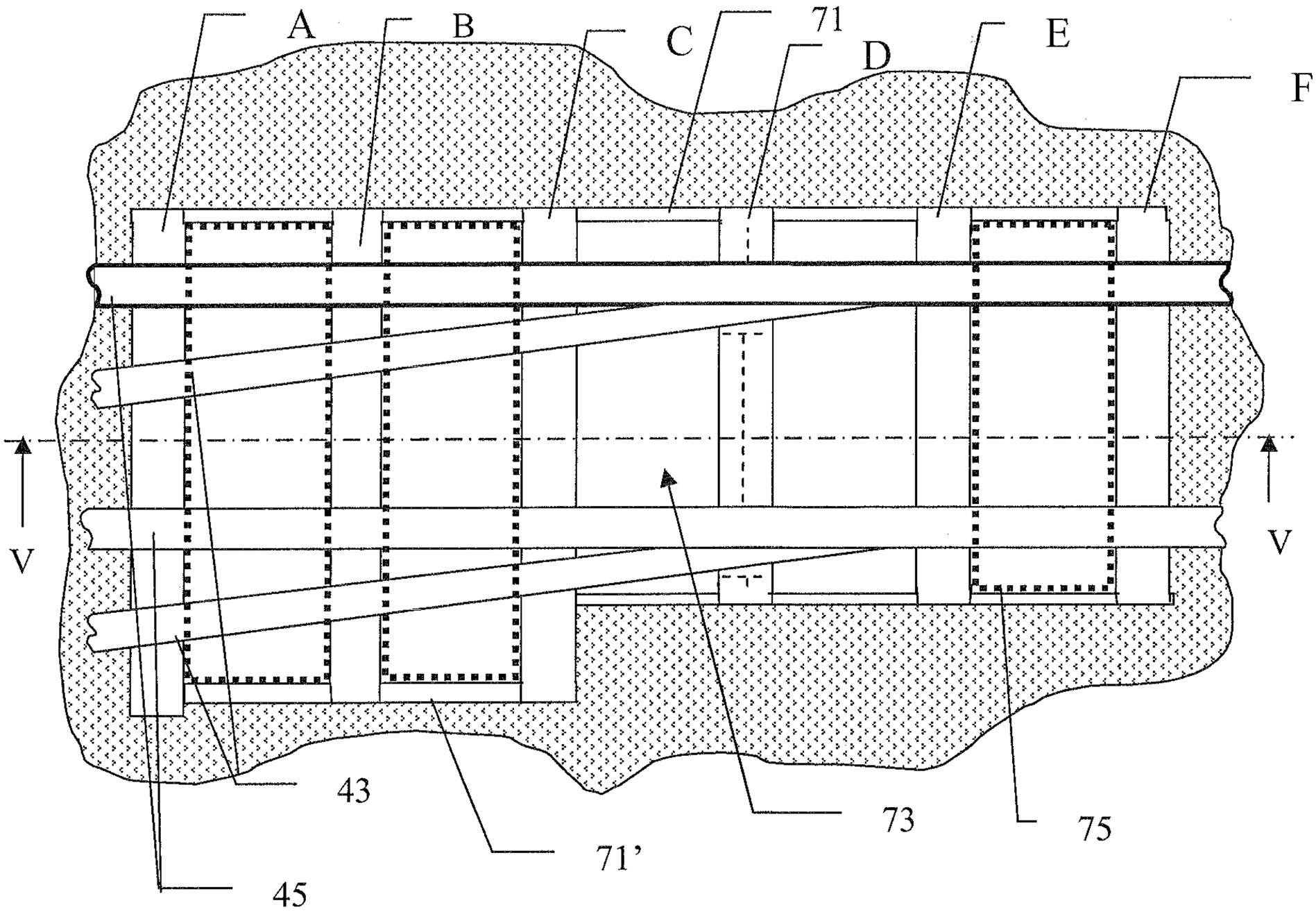

Fig. 5a)

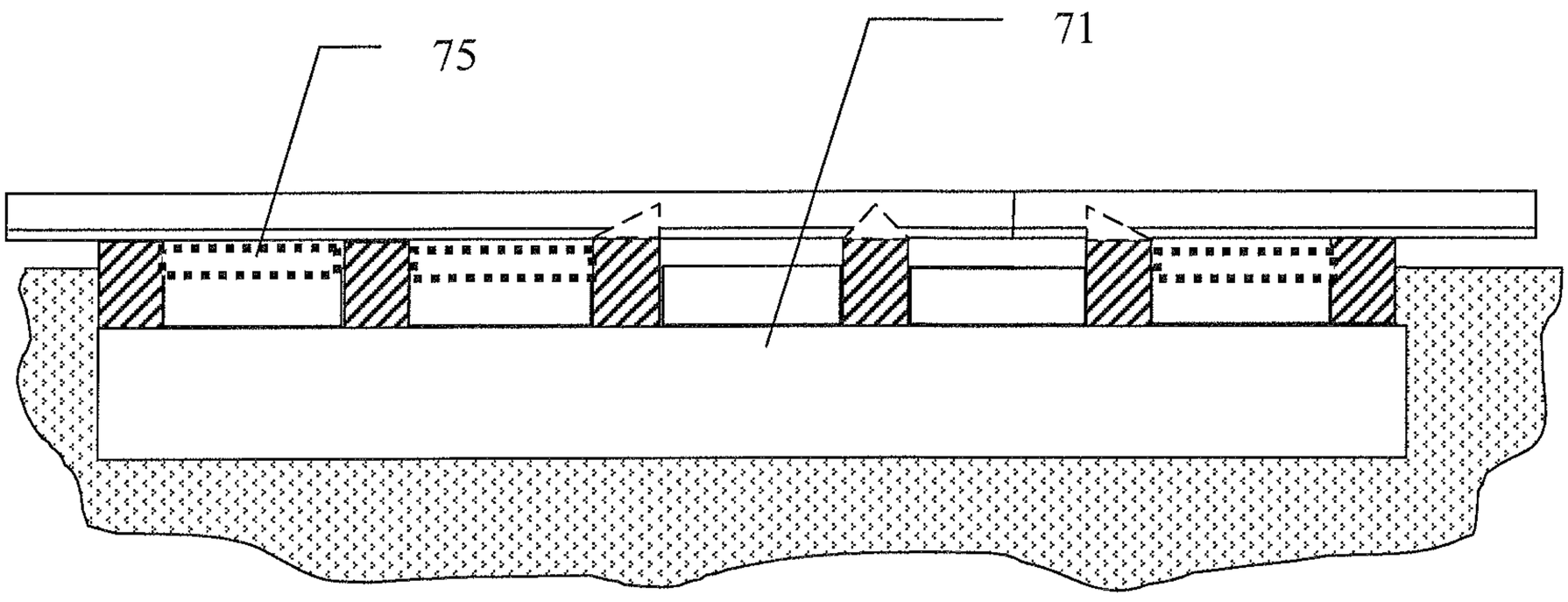

Fig. 5b)

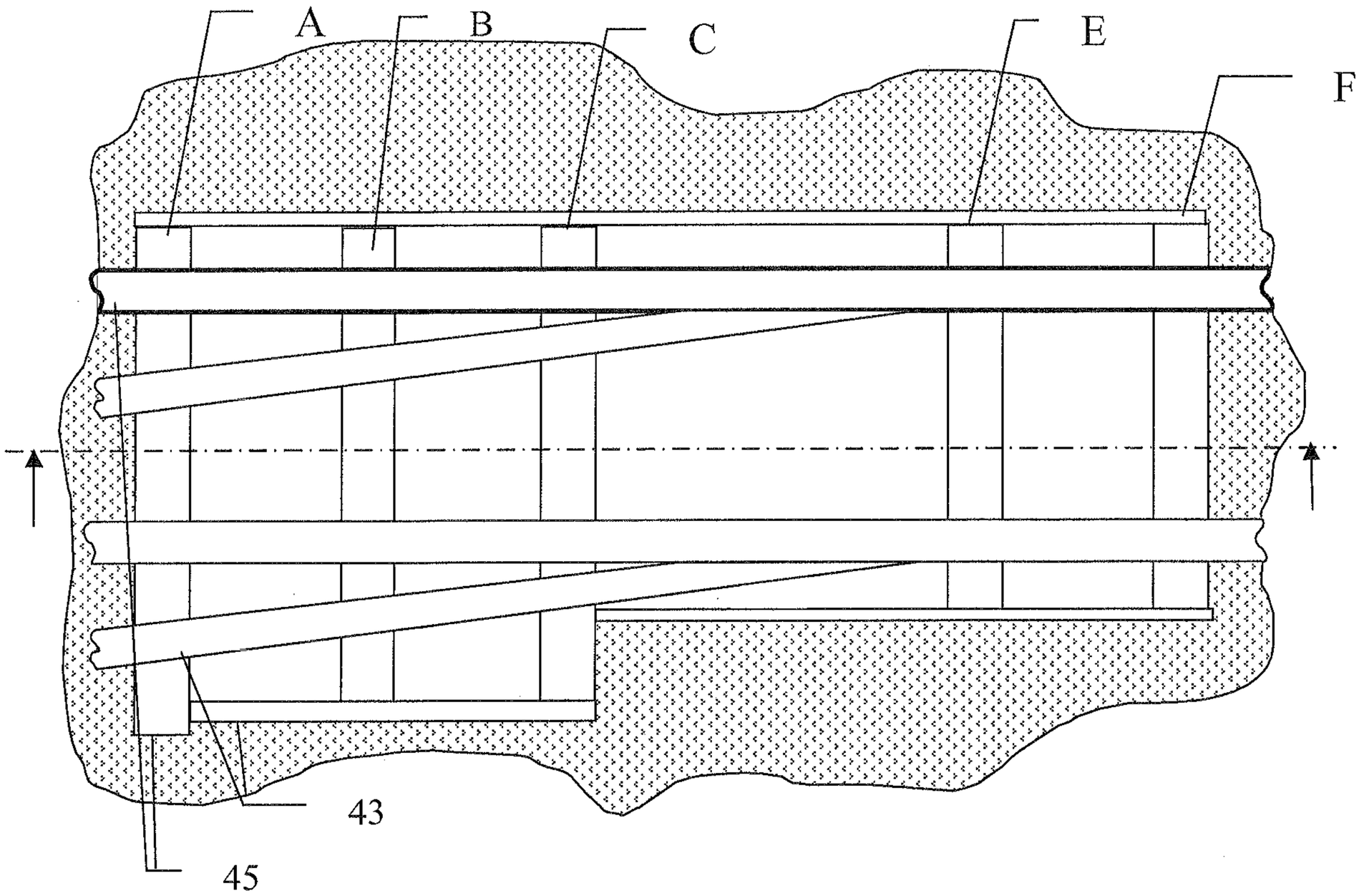

Fig. 6a)

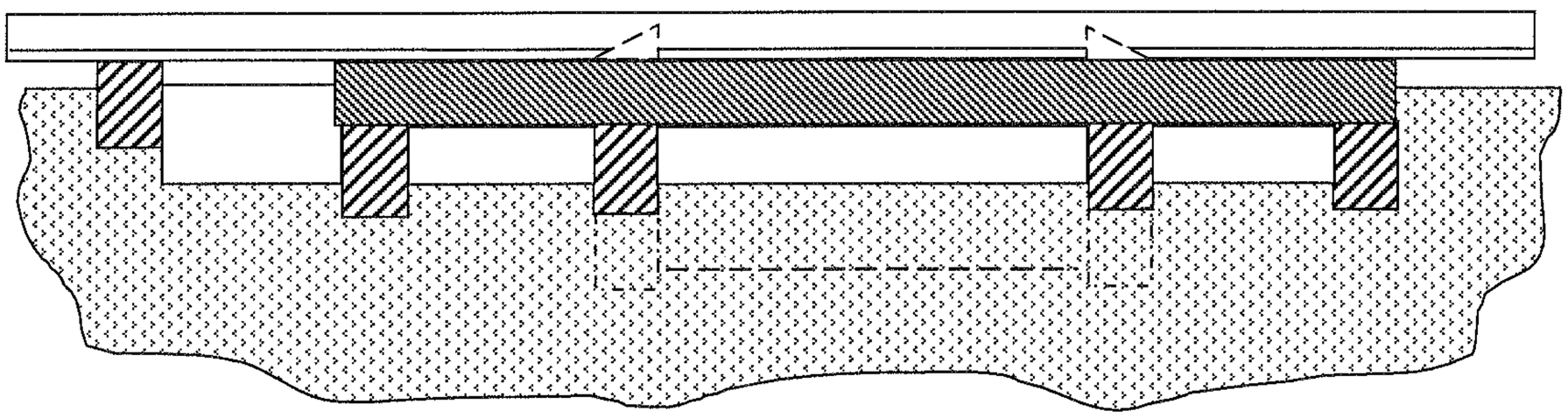

Fig. 6b)

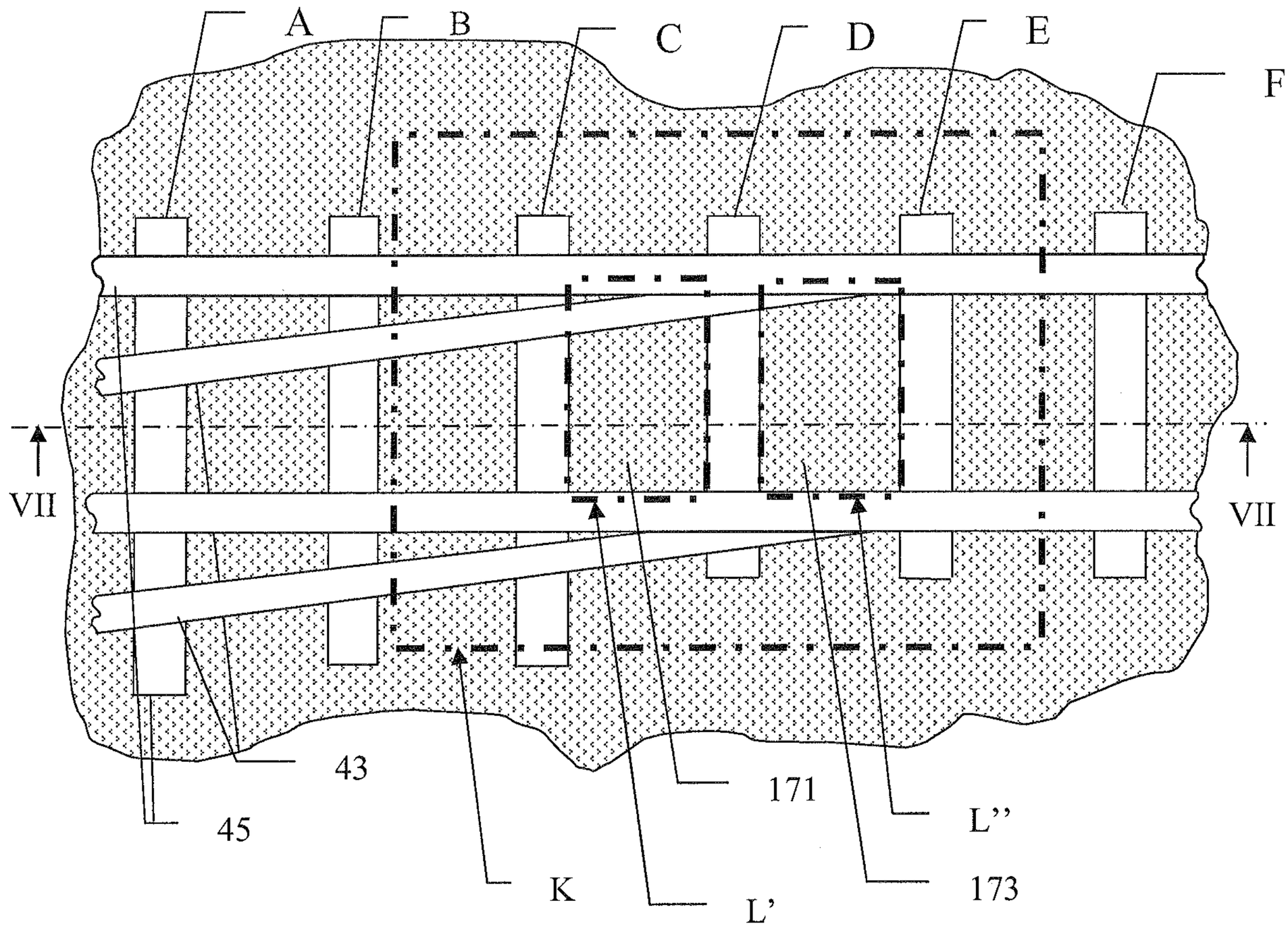

Fig. 7a)

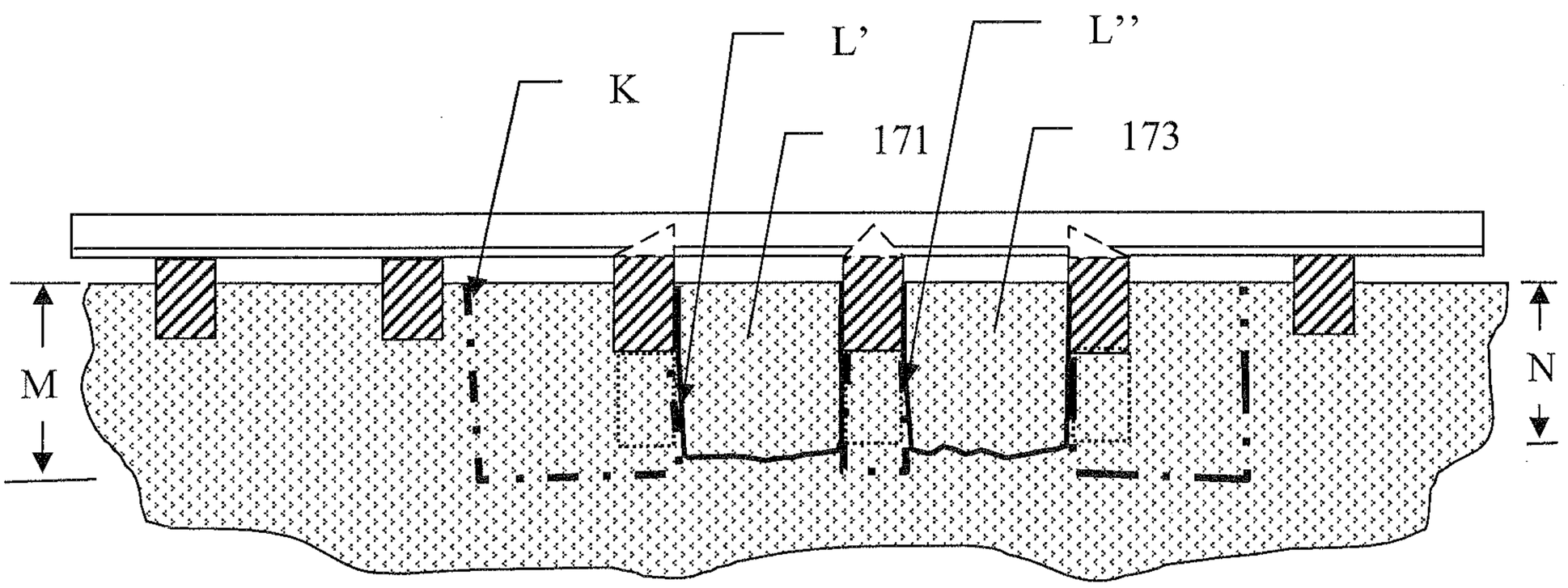

Fig. 7b)

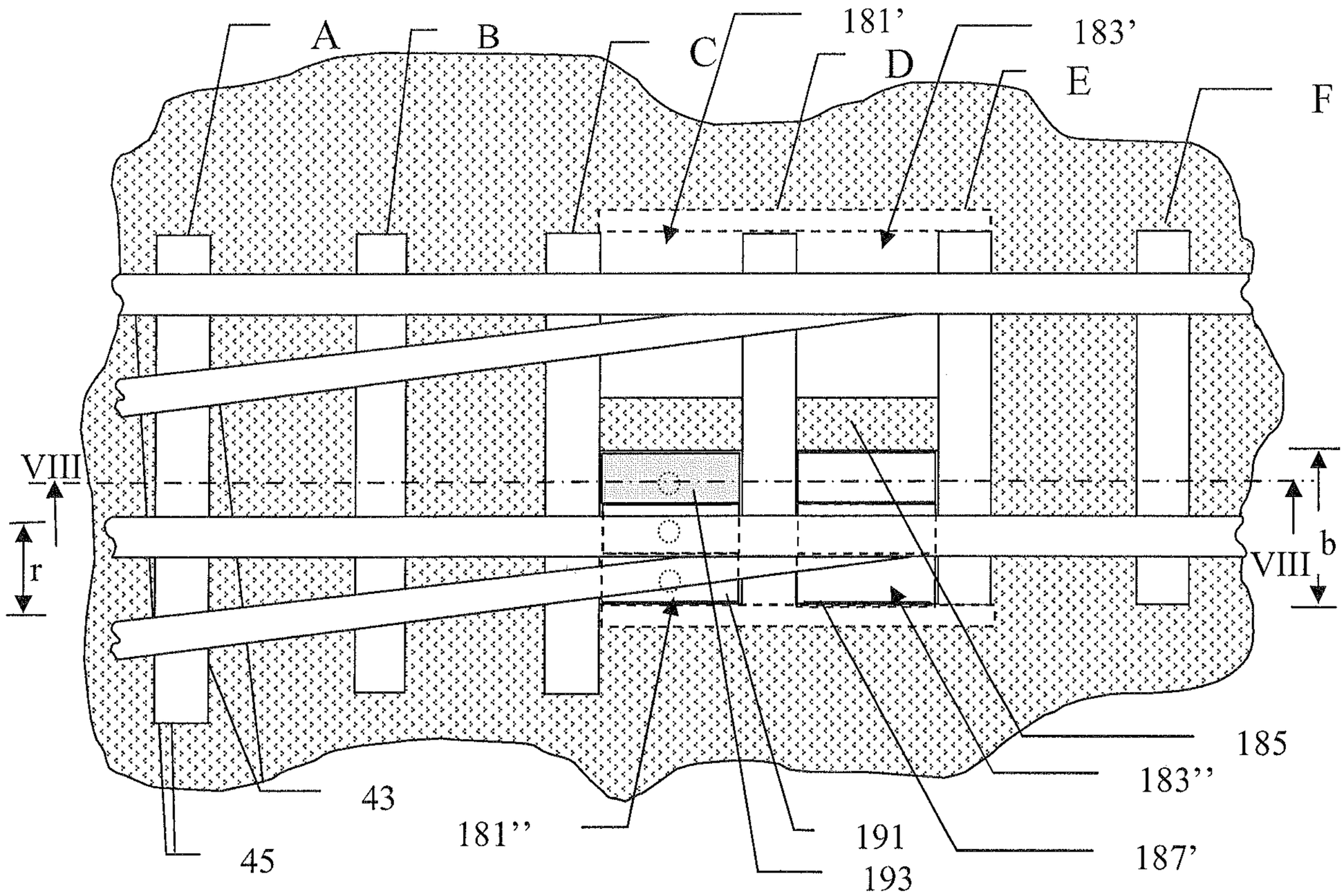

Fig. 8a)

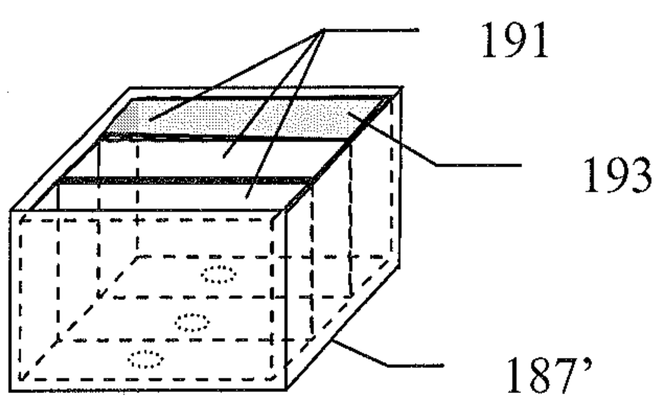

Fig. 8c)

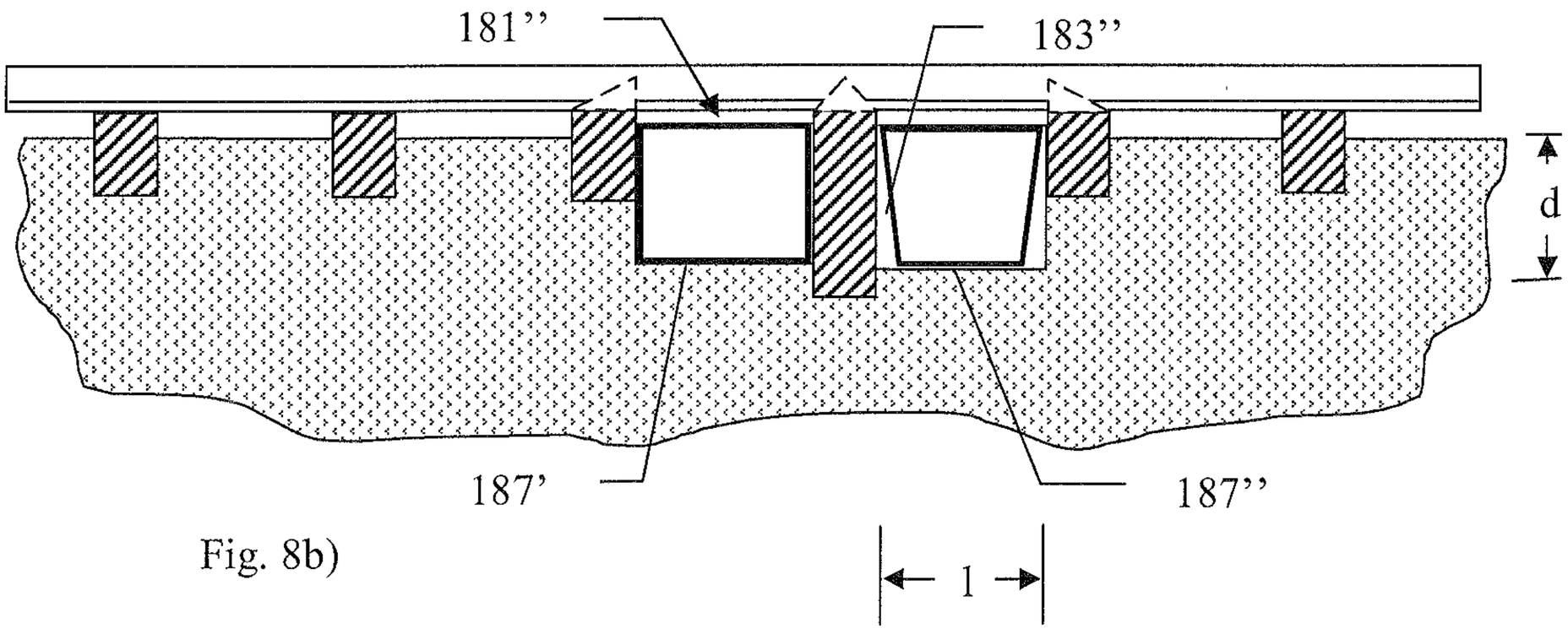

Fig. 8b)

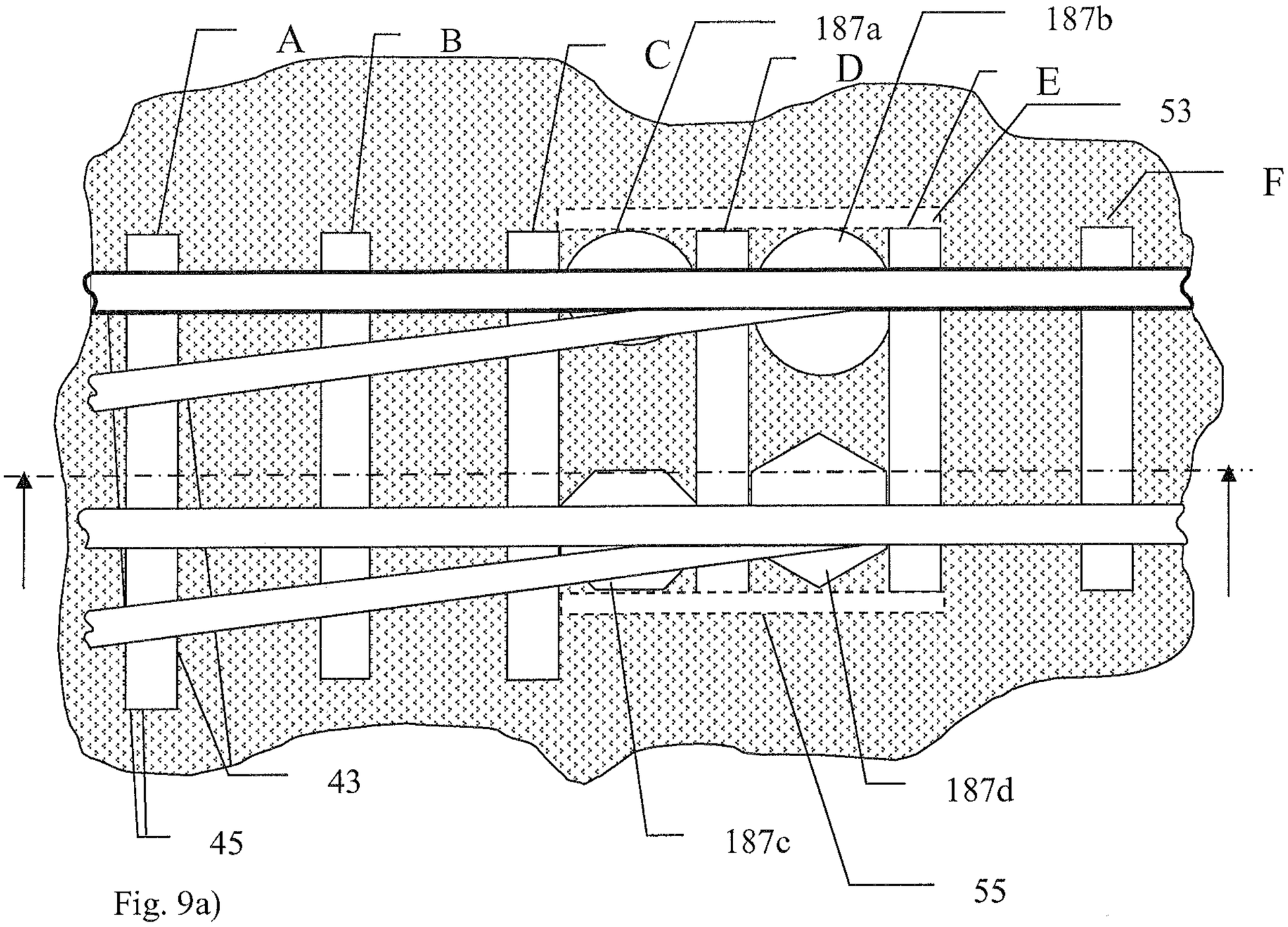

Fig. 9a)

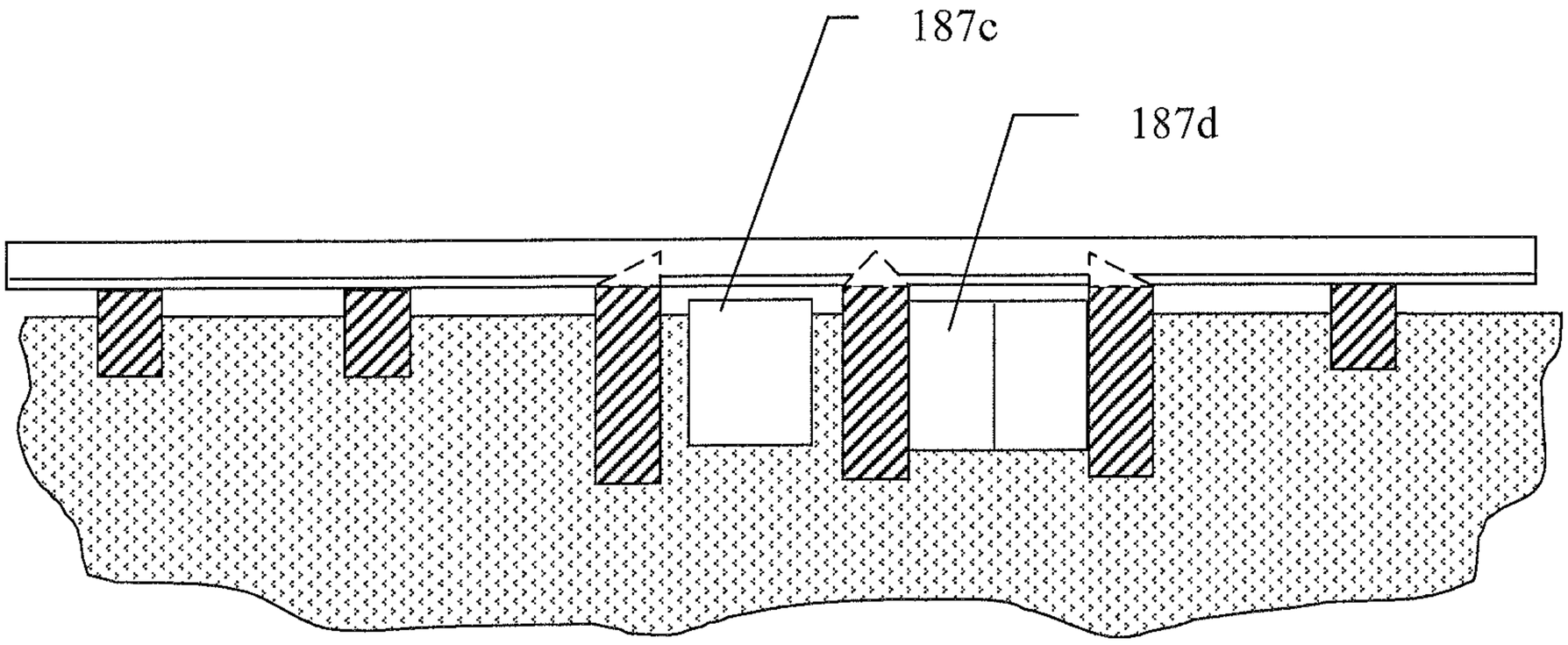

Fig. 9b)

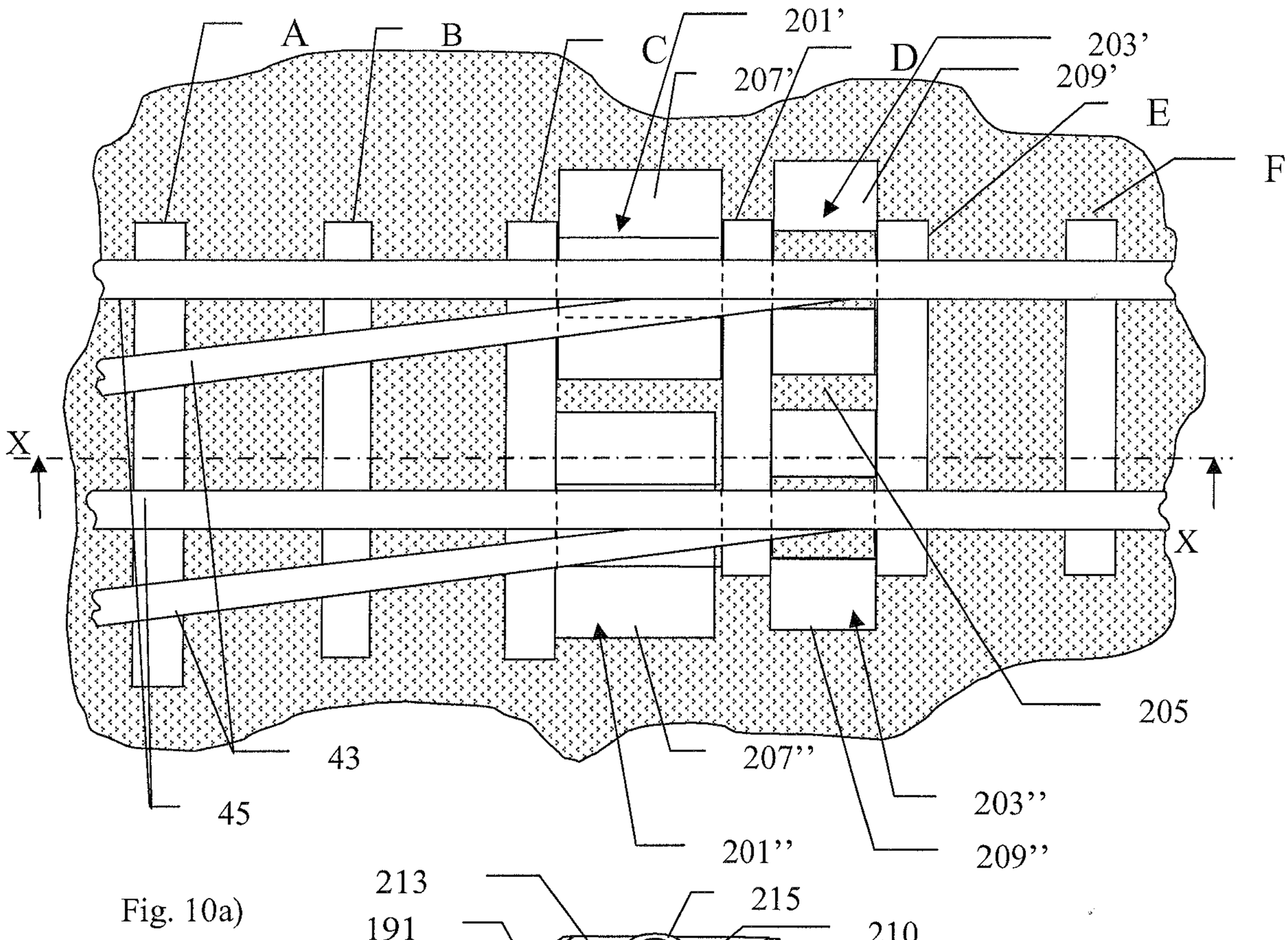

Fig. 10a)

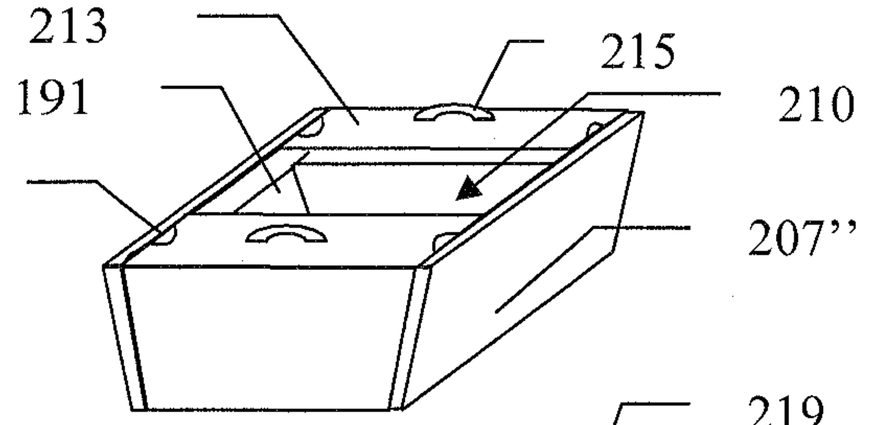

Fig. 10c)

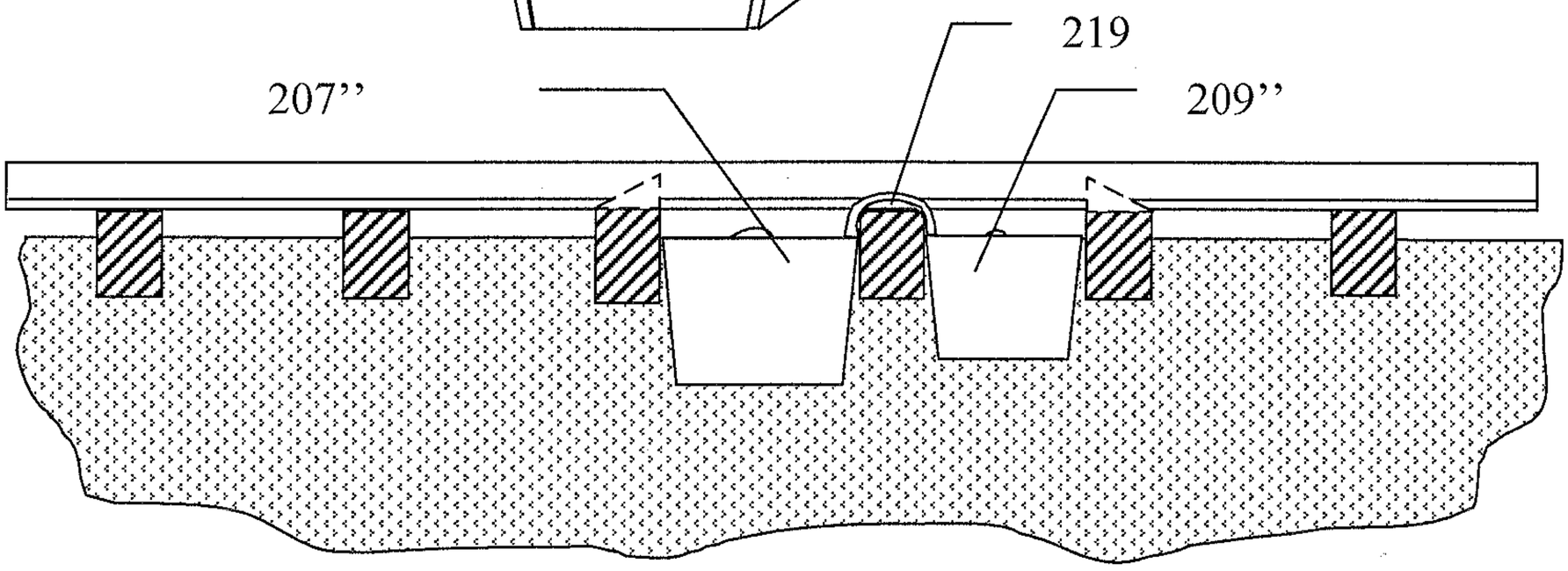

Fig. 10b)

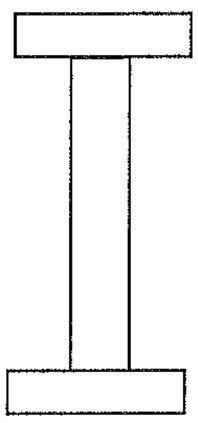

Fig. 11a)

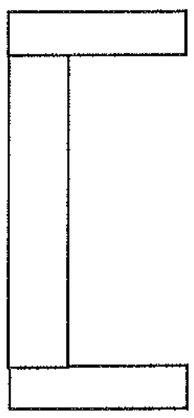

Fig. 11b)

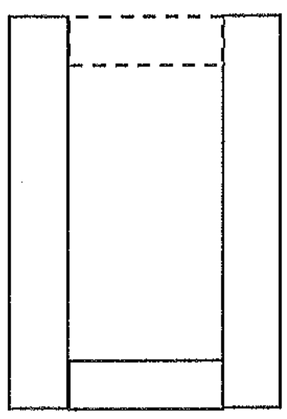

Fig. 11c)

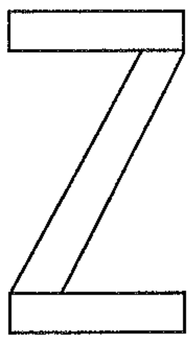

Fig. 11d)

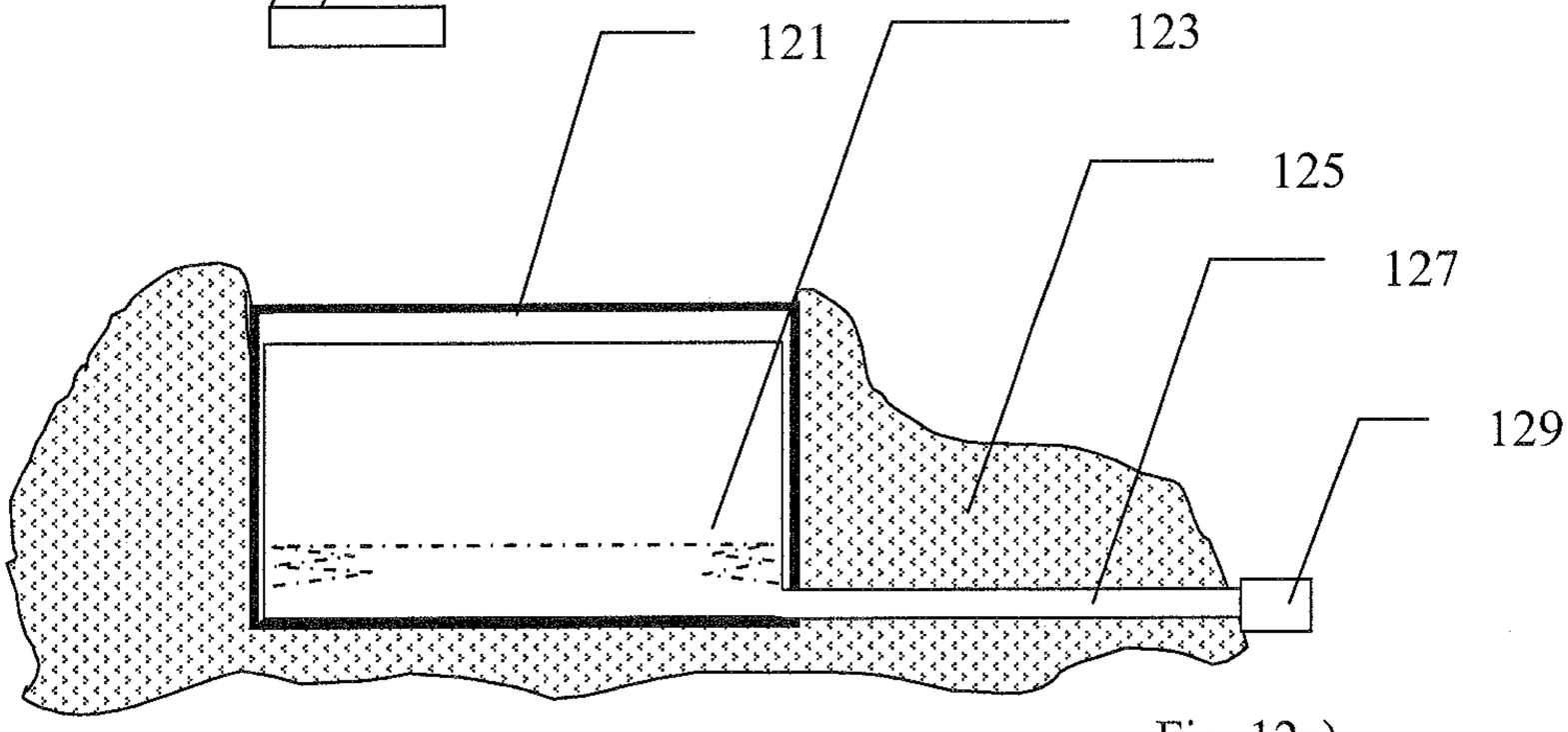

Fig. 12a)

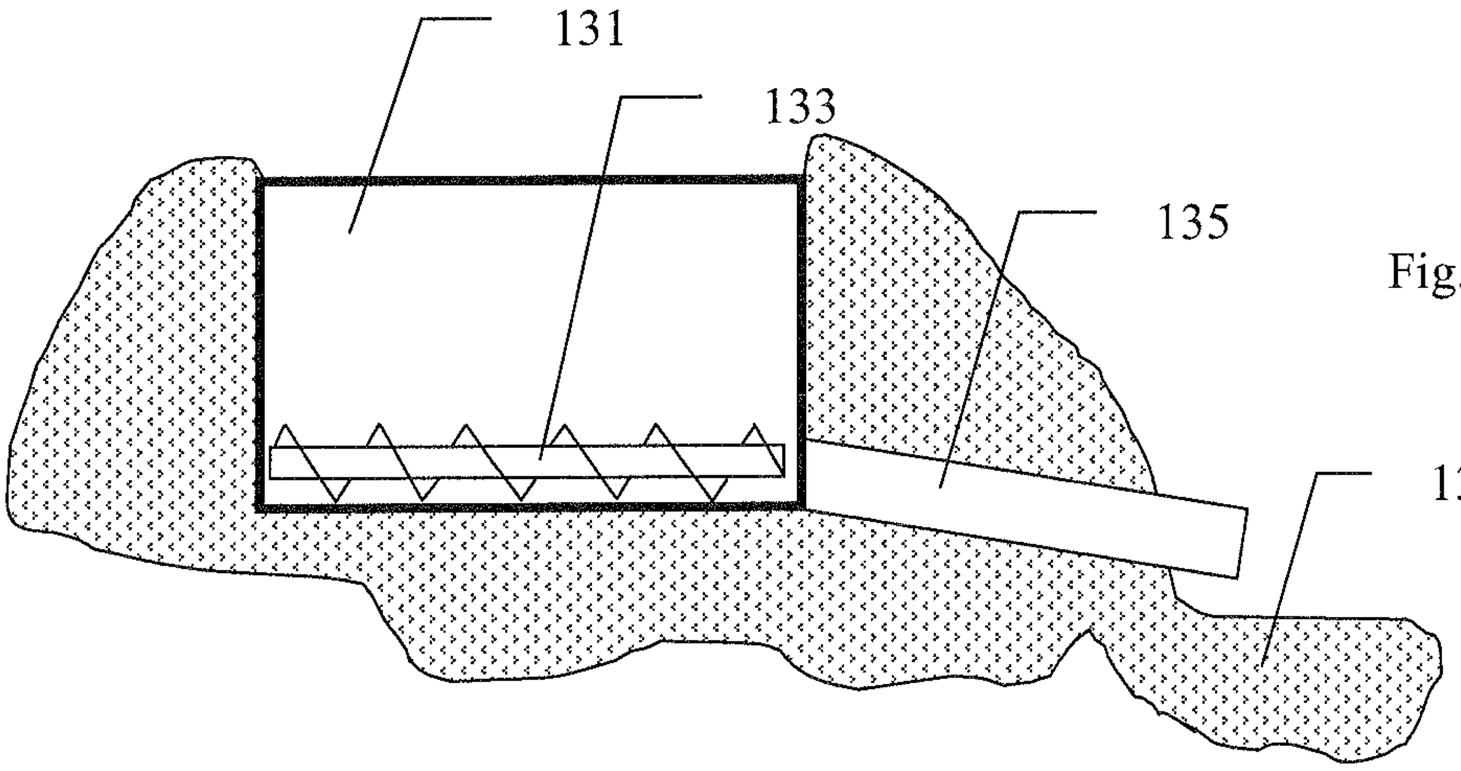

Fig. 12b)

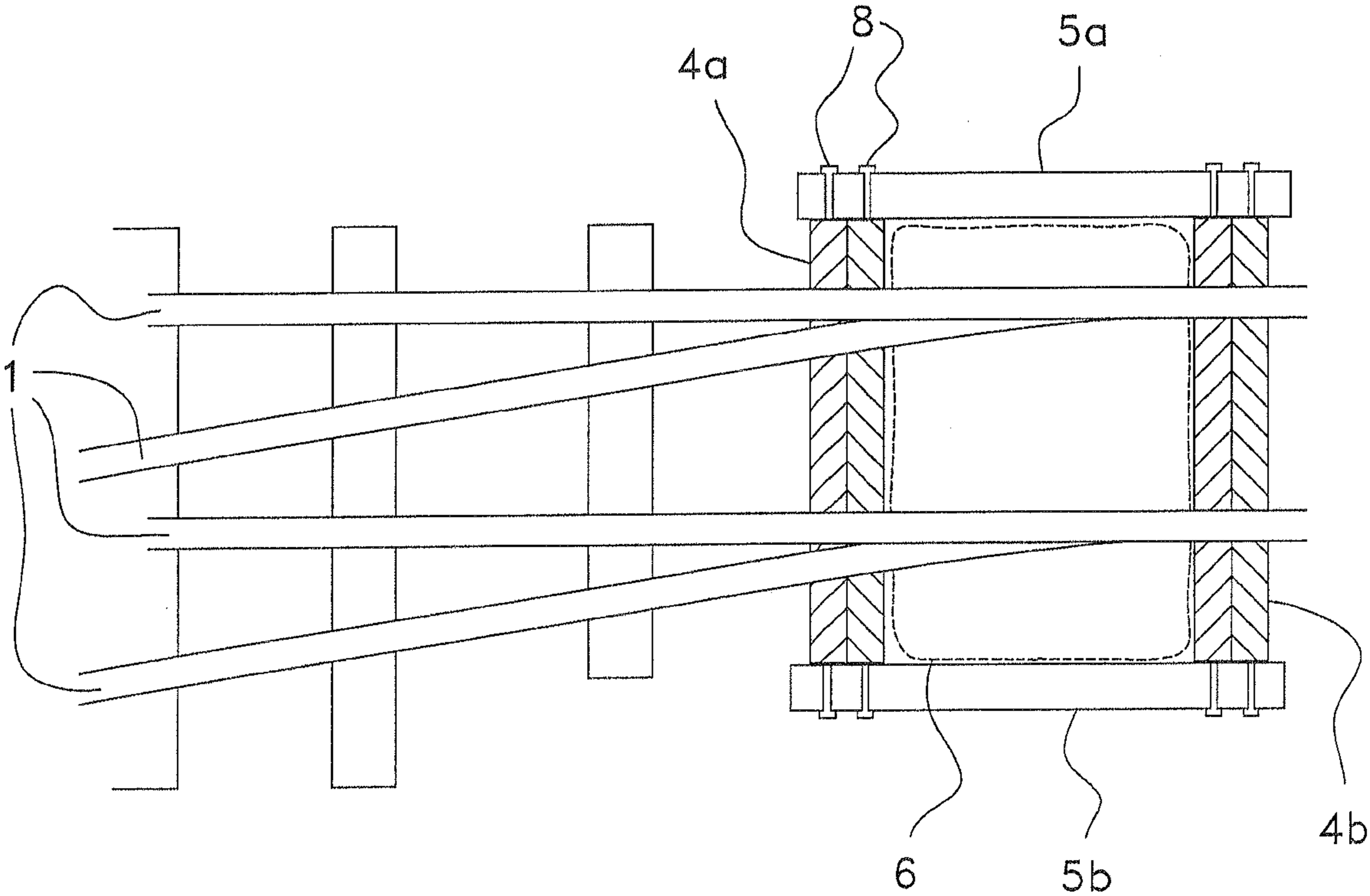

Fig. 2