Feb. 3, 1953 E. SIMONS 2,627,396

COOLING TOWER

Filed March 22, 1948 3 Sheets-Sheet 1

Fig 1

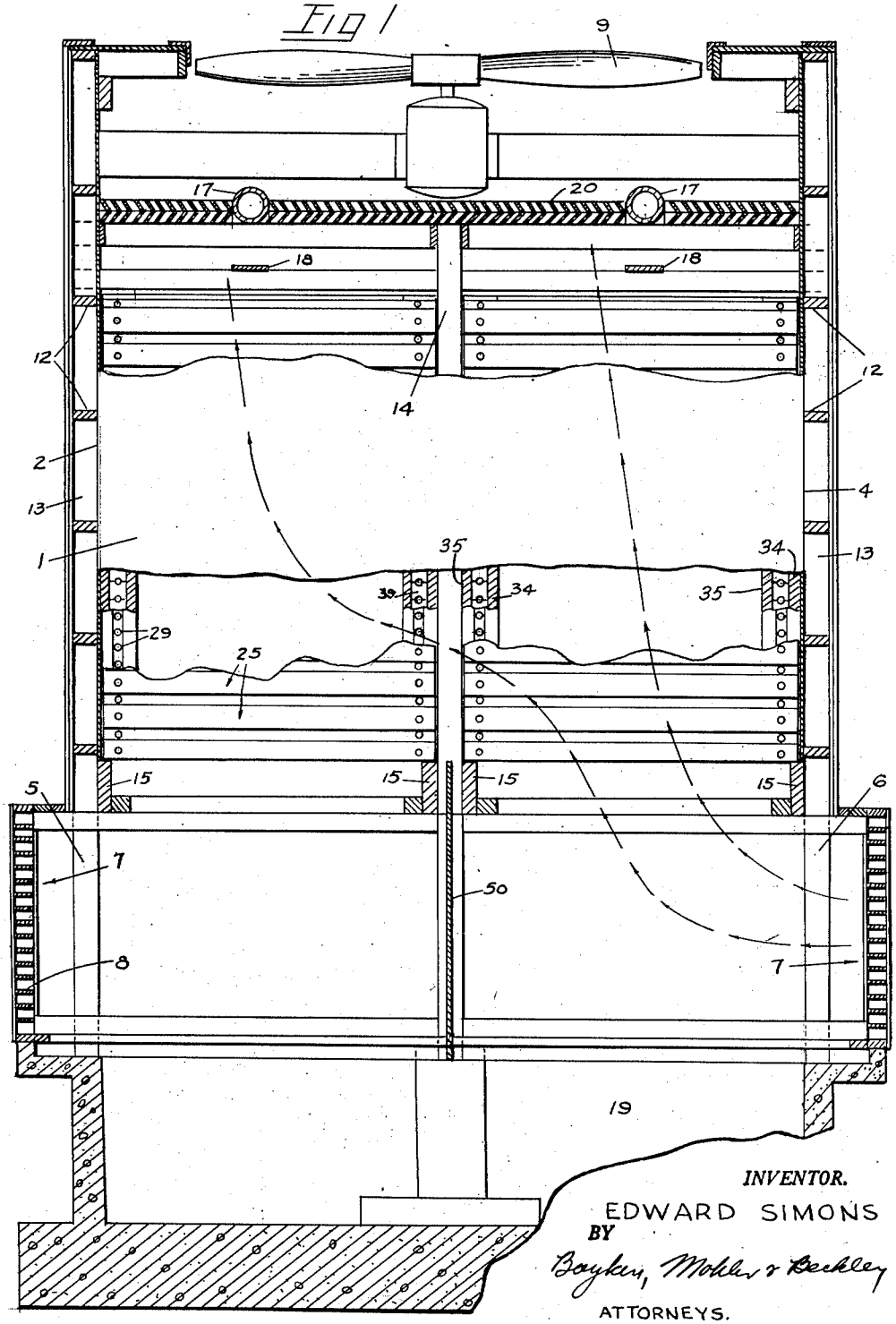

INVENTOR.
EDWARD SIMONS
BY
Bayles, Mohler & Beckley
ATTORNEYS.

Feb. 3, 1953 E. SIMONS 2,627,396

COOLING TOWER

Filed March 22, 1948 3 Sheets-Sheet 2

Fig 2

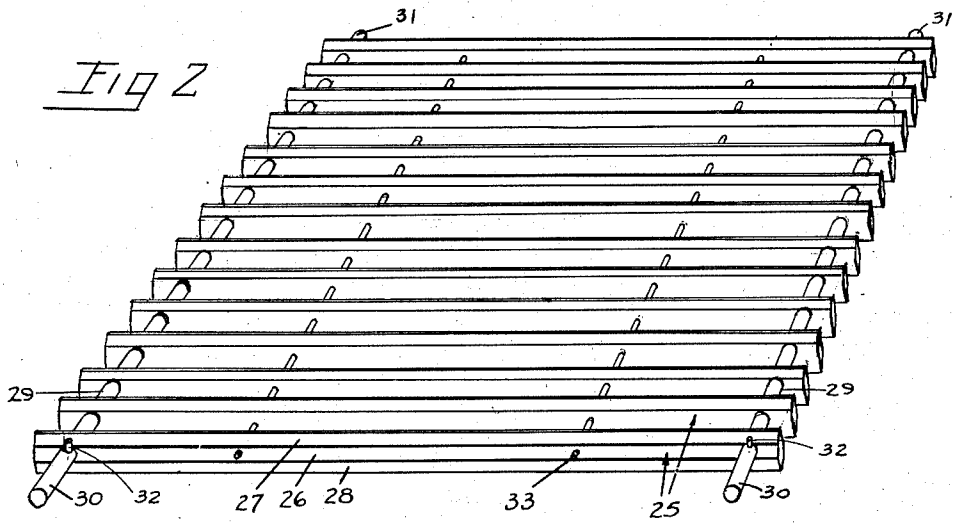

Fig 3

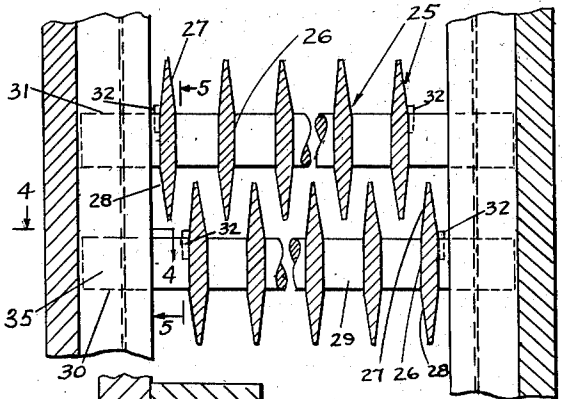

Fig 4

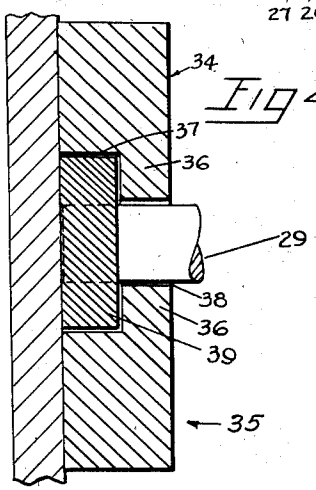

Fig 5

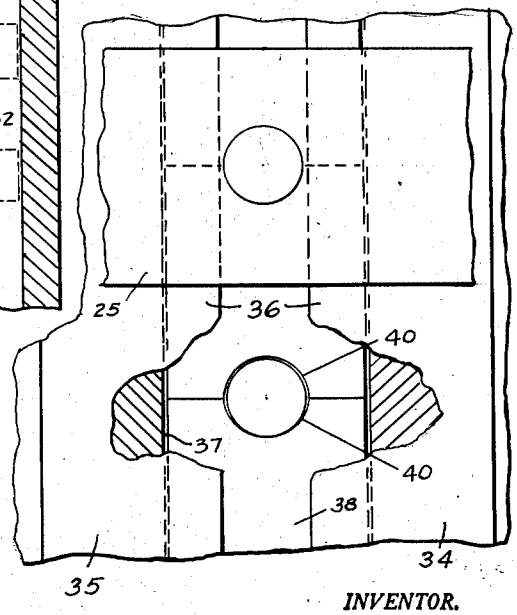

INVENTOR.
EDWARD SIMONS
BY
Boyken, Mohler & Beckley
ATTORNEYS

Feb. 3, 1953 E. SIMONS 2,627,396

COOLING TOWER

Filed March 22, 1948 3 Sheets-Sheet 3

Fig 6

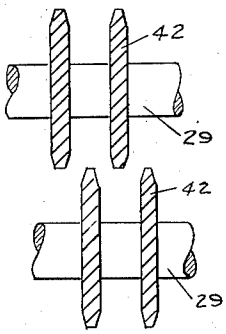

Fig 7

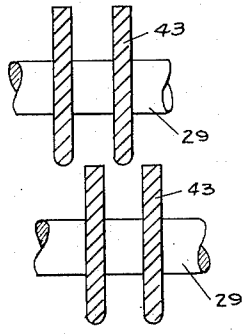

Fig 8

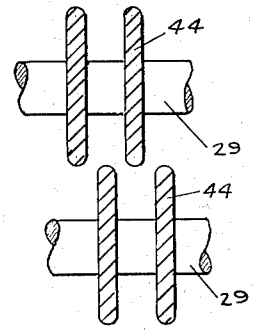

Fig 9

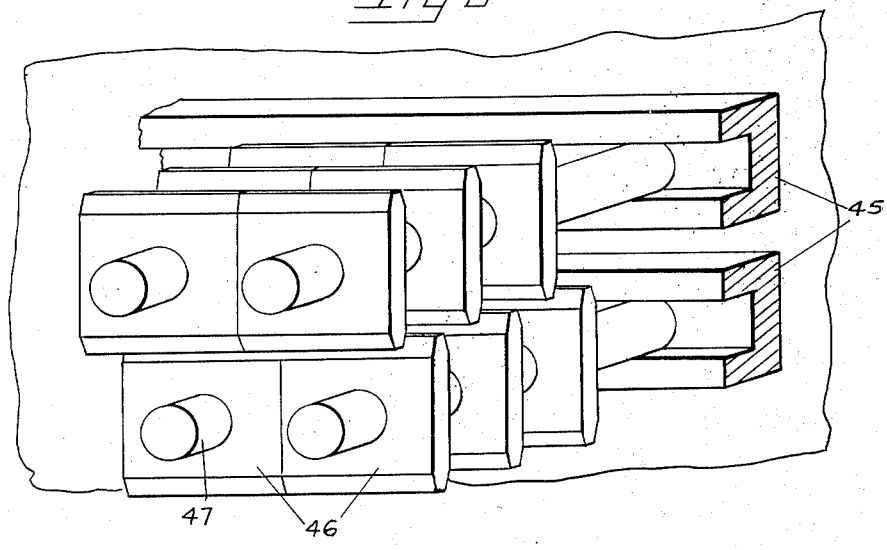

INVENTOR.
EDWARD SIMONS
BY
Boykin, Mohler & Beckley
ATTORNEYS.

Patented Feb. 3, 1953

2,627,396

UNITED STATES PATENT OFFICE

2,627,396

COOLING TOWER

Edward Simons, San Francisco, Calif.

Application March 22, 1948, Serial No. 16,269

6 Claims. (Cl. 261—109)

1

This invention relates to cooling towers and has for one of its objects the provision of a cooling tower that is more efficient than heretofore and that is easier to construct.

Another of the objects is the provision of cooling tower construction in which relatively thin slat sections may be used thereby producing a very high yield of surface per unit of lumber.

A still further object of the invention is the provision of mat or packing structure in a cooling tower whereby substantially greater heat transfer efficiency occurs than heretofore, thus enabling a considerable reduction in the size or height of cooling towers without sacrifice in the ultimate results heretofore accomplished by use of higher towers of conventional structure.

Another object of the invention is the provision of a cooling tower adapted to be packed with mats from outside the tower thus eliminating the weight and strength that heretofore has, of necessity, been built into the mats for the sole purpose of enabling the mats to bear the weight of workmen within the tower and on the mats as the latter are laid or installed.

A still further object of the invention is the provision of mats that are more economical to assemble from slats or the like, and which mats do not require expensive frames, or extensive nailing, but are quickly made up and are relatively light in weight, yet strong.

In cooling towers, the heat transfer surfaces are in banks, each bank being a horizontal row of slats or the like that provide the surface elements having guiding surfaces that generate the heat transfer liquid surfaces. The governing factor in computation of the film coefficient is the circumference of the surface element. As air flows over a surface, an insulating stagnant layer of air is built up. The shorter the surface, the less will be the average thickness of such layer and the greater will be the film conductance for heat transfer to the air.

In staggered surface arrangements, as in a cooling tower, the controlling factor is the circumference of the cross section of the slats normal to air flow, and not the shape of the exposed surface, except so far as the shapes of the surface elements are formed to minimize resistance to air flow.

With the present invention the surface elements are designed and arranged to produce the maximum desired results and in a more economical manner than heretofore.

An added object is the provision of an induced draft cooling tower having a pair of tiers of mats

2

and in which tower wind from any side thereof cannot flow horizontally directly through the tower or any portion thereof but air from opposite sides may mingle within both of the pair of tiers.

Other objects and advantages will appear in the description and in the drawings, such as the elimination of metal such as nails or bolts in those places where collapse, distortion or danger would result from the metal elements disappearing from rust or corrosion.

In the drawings,

Fig. 1 is a part sectional part elevational view of a cooling tower illustrating the invention in an induced draft type of tower, the path of travel of the air under certain circumstances being indicated by arrows.

Fig. 2 is a perspective view of one of the mats separate from the tower. The spacing between the slats is exaggerted for purpose of clarity in showing the rods and bars extending through the slats.

Fig. 3 is a fragmentary enlarged vertical sectional view taken through a pair of adjacent mats, and two of the opposed side walls of the tower between which said mats extend.

Fig. 4 is an enlarged fragmentary sectional view taken along line 4—4 of Fig. 3.

Fig. 5 is an enlarged fragmentary sectional view taken along line 5—5 of Fig. 3.

Fig. 6 is a fragmentary sectional view taken through several slats of a superposed pair of mats showing a different cross sectional contour of slats than is shown in the preferred form of Fig. 3 and which slats in Fig. 6 are not in overlapping relationship.

Fig. 7 is a similar view to that of Fig. 6 but showing a still different cross sectional contour of the slats and Fig. 8 shows a still further modification of the cross sectional contour of the slats.

Fig. 9 is a fragmentary perspective view, partly in section, showing packing or mats in which each is made up of relatively small surface elements secured on bars, with the bars supported at their ends for horizontal movement into the tower.

In detail, the tower illustrated in Fig. 1 is a tower of the induced draft type, being rectangular and having four imperforate side walls 1, 2, 3, 4 in which walls 1, 3 are in opposed relation, and walls 2, 4 are in opposed relation.

The walls 1, 3 of the tower may extend to the ground, while the walls 2, 4 terminate above the ground, providing inlets 5, 6 below walls 2, 4 re-

spectively. Across each of these inlets is a vertical grill 7 made up of a vertical row of vertically spaced generally horizontally disposed strips 8, which may be similar to or identical with those shown in my United States Letters Patent No. 2,437,484 for a Cooling Tower, dated March 9, 1948, or the strips may be plain and rectangular as shown in Fig. 1. The tower walls are generally the same as in said patent, and one or more fans 9 may be positioned within the upper end of the tower for inducing a flow of air into the tower through inlets 5, 6 and upwardly through the packing that is in the tower and out of the upper end through the opening in the top wall in which the fan is positioned.

The numerals 1 to 4 inclusive are used to designate the inner sheathing of the tower that is secured to horizontal frame members 12 extending between corner posts 13 that are at the four corners of the tower.

In the present instance, as in the disclosure shown in the above mentioned patent, two tiers of mats or packing are shown within the tower between the inlets at the lower end thereof and the fan. One tier is adjacent wall 2 and the other tier is adjacent wall 4. Center posts 14 along walls 1, 3 and centrally between the corner posts 13 at the ends of walls 2, 4 may space the tiers apart, while beams 15 at the lower ends of the corner posts and at the opposed sides of the adjacent pairs of posts 14 support said tiers.

Any suitable perforated pipes 17, above the said tiers, may supply water to the packing of each of said tiers under pressure for striking splash strips 18 and for subsequent falling in droplets through the packed area and into the reservoir 19 that is below the tiers.

Drift eliminators 20 extend between pipes 17 and the walls, and are horizontal and in the same plane as said pipes. By positioning the drift eliminators in this position the height of the tower is reduced. Heretofore it has been customary to place the drift eliminators above the spray pipes.

The resistance to flow of air past the drift eliminators is such that a reduced pressure is in the chamber in the upper end of the tower between the drift eliminators and the top of the tower thus effectively causing a substantially uniform upflow of air through the packing and substantially counteracting the normal tendency of the air to be drawn through the packing along lines extending directly to the fan.

Each of the mats in the packing that makes up each of said tiers comprises a horizontal row of horizontally elongated, vertically disposed slats 25 (Fig. 2). The cross sectional contour of each of said slats, and substantially the preferred proportion of vertical width to maximum thickness, is best indicated in Fig. 3. For example, the maximum thickness of each slat in a uniform width zone 26 extending from end to end of each slat centrally between the upper and lower edges thereof may be about ⅜ inches, with the maximum vertical width of each slat may be substantially 3¾ inches. The spacing between adjacent pairs of slats in each row is preferably about 1⅜ inches from the centers of the slats of each such pair. The vertical width of the central portion or zone 26 of each slat is preferably about one-third the total width and the portions 27, 28 that are respectively above and below the central portion 26 are of uniformly decreasing thickness from said central portion to the upper and lower edges of the slat respectively, the thickness of said slat at said upper and lower edges being preferably about one-fourth the maximum thickness of said central portion. It is preferable that the upper edge of each slat be substantially flat so as to provide a splash surface. The lower edge of each slat could be sharp or rounded, if desired, but little, if anything, would be gained thereby. With the present structure the manufacturing is simple and it is immaterial which edges of the slats are uppermost.

The slats 25 are supported in a row in properly spaced relationship on bars 29 that may be equally spaced from the corresponding ends of the slats in each row. These bars 29 may be of wood or any other suitable material and project at their opposite ends from the end slats in the row. One of the projecting ends 30 of said bars project from the end slat adjacent thereto farther from said end slat than the opposite ends 31 project from the opposite end slat, by a distance substantially equal to one-half the distance between the adjacent slats in said row. The reason for this is that upon superposing each of the mats with the bars 29 parallel, the ends of the bars at opposite sides of the tier may be coplanar and yet the slats of adjacent pairs of mats will be in staggered relationship as seen in Fig. 3.

The slats 25 may be a driving fit on the bars 29 and transverse pins 32 may extend into each of the bars 29 adjacent and in substantial engagement with the oppositely outwardly facing sides of the end slats in the row. When the slats are so fitted on the bars 29, the pins 32 could be eliminated.

The preferred structure employs locking antiwarp rods 33 that are of considerably smaller diameter than bars 29, which rods are equally spaced inwardly from bars 29. The slats 25 are formed with aligned openings, and the rods 33 have a driving or press fit in these openings, holding the slats properly and uniformly spaced apart and stationary on said rods. The openings for bars 29 are slightly larger than the outside diameter of the bars, thus enabling the assembly of slats on rods 33 to be quickly supported on bars 29. In this instance the pins 32, which may be of wood function to hold the assembly of slats properly positioned on the bars with the ends 30 projecting a greater distance at one end of each row than the opposite end portion 31, as has already been explained.

Pins 32 may be of metal if desired for the reason that they mainly function to hold the slats against relative displacement on the rods during the actual installation step. Thereafter they may ultimately disappear and the slats will remain fixed at that time.

Against the opposed side walls 1, 3 are secured vertically extending pairs of strips 34, 35. The strips of each pair are horizontally spaced apart to provide opposedly opening pairs of vertically extending grooves or channels (Fig. 4) on said walls. Strips 34, 35 are also formed with spaced lips or portions 36 that overhang the channels 37 adjacent their outwardly opening sides providing a vertical slot 38 between the adjacent sides of said portions 36 through which the ends of bars 29 are adapted to extend.

The channels 37 provided for by said strips 34, 35 are positioned so that there is a space between the tiers that is substantially equal to the thickness of vertical center posts 14.

In packing the tower, the operator may first drop blocks 39 into the grooves or channels 37, which blocks will fall by gravity to the bottoms

of said channels and in this position will rest on beams 15. The upper sides of blocks 39 may be semi-cylindrically recessed as at 40. The depth of each such recess may be about half the thickness of the exposed ends of bars after the lowermost blocks are at the lower ends of channels 37. Corresponding spacer blocks are placed within the channels, their opposite upper and lower sides being recessed as at 40 for the ends of the bars 29. As the depths of the recesses 40 may be substantially half the thickness of the exposed projecting ends 30, 31 of bars 29, the weight of the upper mats is not transmitted to said ends of the bars of the lower mats.

Mats are alternately placed in the tower with blocks 39 before the fan, its support, the upper end of the tower, and such other elements as are above the mats or packing, are in place until each tier of mats is at the desired height, and said mats may be suspended from rope grasped by workmen at the top of the tower and lowered into the tower by said workmen from above for movement by gravity into the tower while so suspended. In this way workmen need not be within the tower and on the mats hence no strength need be built into each mat, as heretofore required, in order to support the weight of workmen. The blocks 39 will fall by gravity in the channels 37 to their required positions as the mats are laid, and even if the blocks were to split, they cannot get out of the channels and would perform their required and expected functions of spacing the mats and of carrying the weight of the latter. After the mats are installed the drift eliminators 20 may then be secured between the sides 1, 3 and 2, 4 and the fan 9 installed.

It is pertinent to note that the mats are positioned in each tier within the tower so that the short and long projecting ends of the bars 29 alternate in the channels, whereby the slats 25 of adjacent pairs of mats are in staggered relationship.

The thickness of blocks 39 is such that the lower portions 28 of the upper mat of each adjacent pair will overlap the upper portions 27 of the lower mat of each pair with the opposed sides of the overlapped portions in equally spaced parallel opposed relationship. Thus the resistance to the flow of air through the packing is minimized and is relatively slight.

In Fig. 6 the slats 42 are merely reduced in thickness along their upper and lower edges, as by bevelling the corners of the slats along their upper and lower edges. When this is done, the slats do not overlap, but the spacers between mats are sufficiently long to support the adjacent mats with the adjacent edges of the slats thereof coplanar.

The proportions of the slats with respect to their maximum thickness, spacing, and vertical width, will preferably remain the same as with the slats of the preferred form.

In Fig. 7 the slats 43 have their lower edges only rounded, so that their flat upper edges will provide splash surfaces. Otherwise the arrangement of the slats is the same as in Fig. 6, the adjacent edges of the slats of adjacent mats being substantially coplanar. In mats of this kind it is pertinent to note that the pressure drop is 0.15 inch of water gauge whereas if the lower or leading edges of the slats were to remain rectangular, the pressure drop would be 0.33 inch of water gauge, or more than double.

In Fig. 8 the slats 44 have both their upper and lower edges rounded. Otherwise the arrangement of slats and mats is the same as in Fig. 7. If the upper edges of the slats were brought to a knife edge, the undesirable result would be that the dropping water would tend to become distributed on one side or the other of the respective slats instead of there being a uniform distribution.

As a modification of the structure described above, horizontally extending opposedly opening channel members 45 may be secured against two opposed walls of the tower, and the projecting ends of the bars that carry the slats may be slipped into these channels from one open side of the tower, said side being later closed (Fig. 9).

Also, each mat may be made up of rows of rectangular disks 46 each being centrally apertured and driven onto a supporting bar 47. The disks of one mat are staggered relative to the disks of the adjacent mat, and the adjacent edges of the disks of adjacent mats are coplanar. By this structure the disks may be quite thin, and when the rows of disks of each mat are relatively close together as seen in Fig. 9, the disks cannot rotate on the axes of the supporting bars 47 to any appreciable extent, but will be held with their upper and lower edges substantially horizontal. These disks could obviously overlap the same as the slats of Fig. 2, if tapered in generally the same manner.

While only a pair of tiers are shown in the tower of Fig. 1, there may be three, four, six, eight, twelve, etc. tiers in each tower, and it is immaterial which direction the slats extend with respect to the inlets. In certain instances a fan may be provided for each tier, while in other instances a larger fan may serve as many as six tiers arranged in two rows of three each.

Between inlets 5, 6 is a vertical partition 50 that prevents atmospheric air from blowing straight through the lower end of the tower, and yet air drawn through both or either of the inlets will pass through the mats of both tiers of adjacent pairs thereof irrespective of the direction in which the slats extend. Thus the fact that more air may enter one inlet than the other has little effect upon the distribution of air in the tower since the air entering either inlet will be substantially uniformly distributed through the mats in being drawn upwardly to the chamber above the drift eliminators.

When more than two tiers of mats are in a tower, such as three, these are usually in a single row with the inlets along the long sides of the row. Where four tiers are used they are in two rows of two each, forming a rectangular assembly, and the inlets are along the two longer sides, although the four sides are almost equal in width; where twelve tiers are used, they are usually in three rows of four each with the inlets along the long sides longitudinally of the rows of four. The partitions are always midway between the inlets.

In the modifications shown in Figs. 6, 7, 8, the slats are of the same maximum thickness, width and spacing as those of Figs. 1 to 6, but inasmuch as they do not have the full beveled sides of the latter, they do not overlap. The rounding or beveling along both the upper and lower edges of the slats is preferable to restricting the same to the lower edges only, but, as already explained, the mere rounding of the lower edges only results in a reduction of about one-half in the resistance to air flow.

It is to be noted that the tapered or wedged

shape of portions 27, Fig. 3 and Fig. 6, acts to produce easy elbow bends of very slight resistance to air flow. Such easy elbow bends produce shock losses which are much less than those which develop with abrupt expansion and contraction of the air flow.

I claim:

1. In a cooling tower, a horizontal mat comprising a horizontal row of spaced relatively thin vertically disposed horizontally extending slats formed with horizontally aligned openings, a bar extending through said openings for supporting said slats within a cooling tower, each of said slats being of progressively increasing thickness from its upper and lower edges in direction toward the center, a second mat having a similarly disposed row of similar slats in similar arrangement disposed above said first mentioned row with the lower marginal portions of the slats of said second mat in horizontally spaced overlapping relation to the upper marginal portions of the slats of said first mentioned mat, and means for supporting the said second mat with its said slats in said relationship, the opposedly facing sides of the overlapped portions being flat and substantially parallel and in planes inclined relative to vertical.

2. In a cooling tower having a pair of opposed vertical side walls, a tier of mats positioned within said tower between said side walls, guide members adjacent the opposed sides of said walls having opposedly opening parallel grooves, oppositely outwardly projecting means on each of said mats slidably positioned within said grooves, each of said mats including a horizontal row of horizontally spaced relatively thin mat elements respectively positioned in vertical planes, and said means projecting perpendicularly from the end elements of each row thereof and spaced between the upper and lower edges of said elements, said elements in each mat being horizontally elongated slats with horizontally elongated bars extending therethrough and outwardly of the end slats of each mat, the said means in said grooves being the projecting ends of said bars.

3. In a cooling tower having a pair of opposed vertical side walls, a tier of mats positioned within said tower between said side walls, guide members adjacent the opposed sides of said walls having opposedly opening parallel grooves, oppositely outwardly projecting means on each of said mats slidably positioned within said grooves, each of said mats including a horizontal row of horizontally spaced relatively thin mat elements respectively positioned in vertical planes, and said means projecting perpendicularly from the end elements of each row thereof and spaced between the upper and lower edges of said elements, said elements in each mat being horizontally elongated slats with horizontally elongated bars extending therethrough and outwardly of the end slats of each mat, the said means in said grooves being the projecting ends of said bars, said grooves being vertical whereby each mat may be lowered by gravity into said tower, and spacers positioned within said grooves and between the projecting ends of said bars for spacing said mats and for suspending said mats therefrom.

4. In a cooling tower having a pair of opposed vertical side walls, a tier of mats positioned within said tower between said side walls, guide members adjacent the opposed sides of said walls having opposedly opening parallel grooves, oppositely outwardly projecting means on each of said mats slidably positioned within said grooves, each of said mats including a horizontal row of horizontally spaced relatively thin mat elements respectively positioned in vertical planes, and said means projecting perpendicularly from the end elements of each row thereof and spaced between the upper and lower edges of said elements, said elements in each mat being horizontally elongated slats with horizontally elongated bars extending therethrough and outwardly of the end slats of each mat, the said means in said grooves being the projecting ends of said bars, said grooves being vertical whereby each mat may be lowered by gravity into said tower, and spacers positioned within said grooves and between the projecting ends of said bars for spacing said mats and for suspending said mats therefrom, said spacers being blocks disposed one above the other in engagement at their adjoining edges and recessed adjacent the junctures of each adjacent pair for receiving the ends of said bars, whereby the weight of the upper mat of each adjacent superposed pair will be wholly taken by the blocks extending between the bars thereof and the ends of the bars of the mat therebelow.

5. In a cooling tower, a tier of rectangular mats of the same size and shape, each mat comprising a horizontally extending row of equally spaced slats disposed in side by side relationship, the rows of slats in said mats being of equal length, means securing the slats of each row together for handling as a unit including bars of equal length extending through the slats of each row at right angles to said slats and longitudinally of each row, the opposite end portions of the bars extending through each row projecting from the end slats of the row for suspending said slats from said opposite end portions, one of the corresponding end portions of the bars in each row being uniformly longer than the opposite end portions whereby the slats in adjacent pairs of mats in said tier will be in staggered relationship upon positioning the mats of said adjacent pairs with the longer end portions of the bars of one mat of each pair over the shorter end portions of the other mat with the terminating opposite ends of the bars of the mats respectively coplanar at the two opposite sides of the tier, and guide means on said tower for holding said opposite ends coplanar.

6. An induced draft cooling tower having imperforate side walls and including a pair of tiers of mats in side by side relationship, horizontally spaced supporting members for said mats, a pair of spaced opposed, laterally directd air inlets at the bottom of said tower at points below said tiers and communicating with the lower ends of the latter for upward flow of air from said inlets through the mats of said tiers, a partition below said tiers and between them for directing the air from said inlets upwardly through the mats of the tiers respectively adjacent said inlets, said supporting members permitting passage of air from either of said tiers to the other during movement of air from said inlets through said tiers whereby the air from one inlet will mingle with air from the other inlet in said tower above said partition, the respective mats in each of said tiers being elongated, parallel, horizontally extending slats, and the slats in the mats of one tier being substantially parallel with the slats in the other

tier, and the space between the adjacent ends of the slats in said tiers being open to permit flow of air from one tier to the other.

EDWARD SIMONS.

REFERENCES CITED

The following references are of record in the file of this patent:

UNITED STATES PATENTS

Number	Name	Date
1,399,037	Uhde	Dec. 6, 1921
2,207,272	Simons	July 9, 1940
2,239,936	Simons	Apr. 29, 1941
2,299,920	Moore	Oct. 27, 1942
2,356,653	Cox	Aug. 22, 1944
2,437,484	Simons	Mar. 9, 1948

FOREIGN PATENTS

Number	Country	Date
362	Great Britain	Jan. 7, 1909
25,449	Great Britain	Nov. 12, 1906
249,420	Great Britain	Mar. 25, 1926
320,575	Great Britain	Oct. 17, 1929
518,373	Great Britain	Feb. 26, 1940
542,698	Great Britain	Jan. 23, 1942