No. 727,369. PATENTED MAY 5, 1903.

S. C. HOYLE.

COPY HOLDER.

APPLICATION FILED JULY 14, 1902.

NO MODEL.

Fig 1

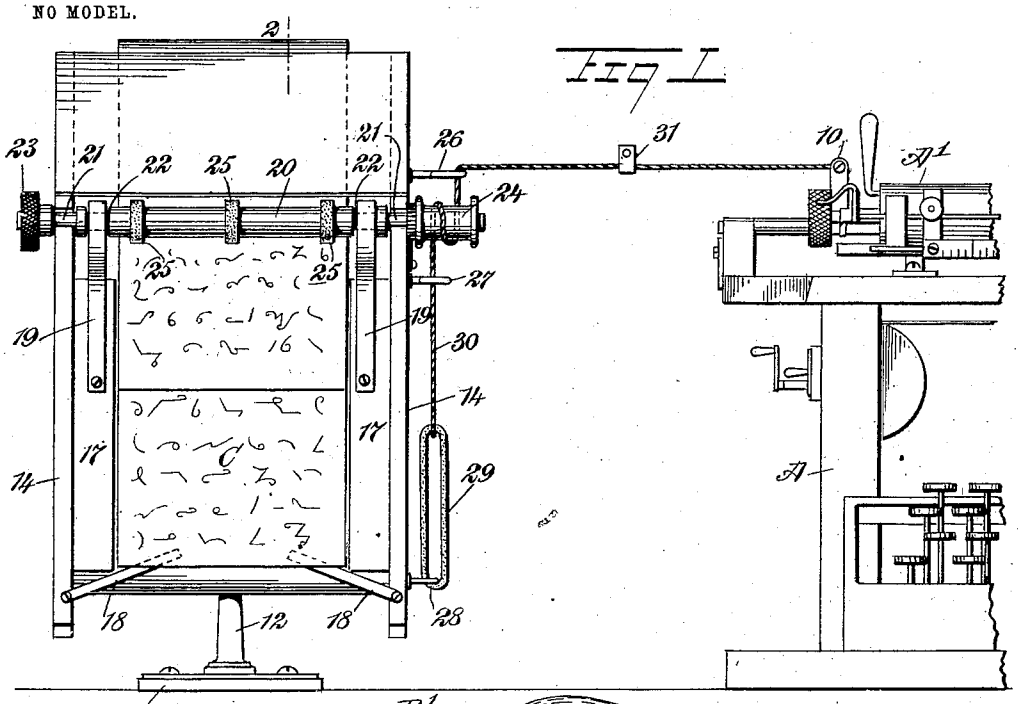

Fig 2

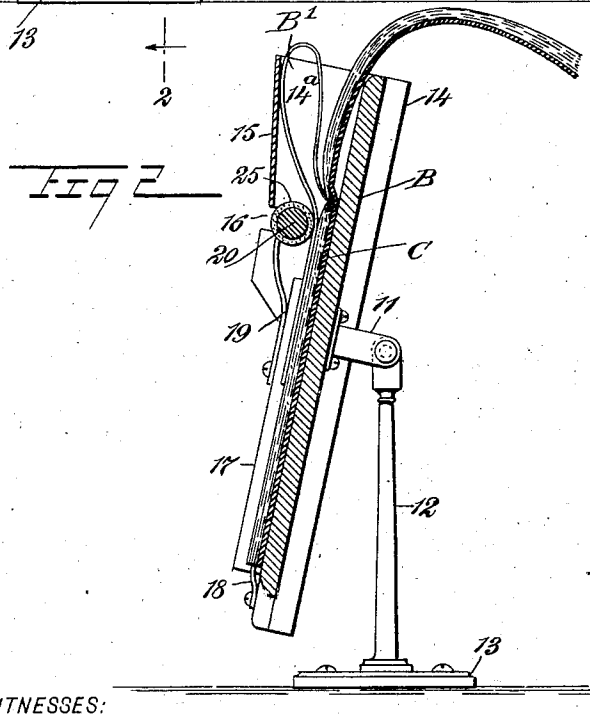

WITNESSES:

H. Walker

J. Fred Acker

INVENTOR

Samuel C. Hoyle

BY Munn & Co.

ATTORNEYS.

THE NORRIS PETERS CO., PHOTO-LITHO., WASHINGTON, D. C.

No. 727,369. Patented May 5, 1903.

UNITED STATES PATENT OFFICE.

SAMUEL COOK HOYLE, OF BRYAN, TEXAS.

COPY-HOLDER.

SPECIFICATION forming part of Letters Patent No. 727,369, dated May 5, 1903.

Application filed July 14, 1902. Serial No. 115,468. (No model.)

To all whom it may concern:

Be it known that I, SAMUEL COOK HOYLE, a citizen of the United States, and a resident of Bryan, in the county of Brazos and State of Texas, have invented a new and Improved Copy-Holder, of which the following is a full, clear, and exact description.

My invention relates to that class of copy-holders especially designed to receive short-hand note-books or similar copy.

The purpose of the invention is to provide a simple construction of holder which will keep the place during the task of copying and will turn the leaves of the shorthand-book, thus obviating the necessity of removing the book from the holder until all the copying desired is completed, and, further, to provide means for automatically operating the device through the medium of the carriage of a type-writing machine or manually, as may be found convenient.

The invention consists in the novel construction and combination of the several parts, as will be hereinafter fully set forth, and pointed out in the claims.

Reference is to be had to the accompanying drawings, forming a part of this specification, in which similar characters of reference indicate corresponding parts in both figures.

Figure 1 is a front elevation of the copy-holder and a portion of a type-writing machine, illustrating how the holder is operated by the action of the carriage of the type-writing machine; and Fig. 2 is a vertical section through the device, taken practically on the line 2 2 of Fig. 1.

A represents the body portion of a type-writing machine, and A′ the carriage thereof, which is shown at its left-hand end as provided with a rear extension 10.

The body of the improved holder consists of a plate or board B of suitable dimensions, smooth or plain upon its front face, and at the back portion of said body board or plate a lug 11 is usually secured adapted for pivotal and adjustable attachment to a standard 12, having a base 13, capable of being screwed upon the table of the type-writing machine or otherwise attached thereto. Side bars 14 are provided for the body board or plate B, extending from the top of the body board or plate a suitable distance below its lower edge, and preferably both the top and bottom edges of the board or plate B at its front face are more or less curved. A hood B′ is located at the front upper portion of the body board or plate, extending from side to side thereof, and this hood is open at the top and at the bottom and is deeper at the top than at the bottom, so that the front of the hood is more or less downwardly and inwardly inclined, as is illustrated in Fig. 2. In the construction of the hood B′ two side sections 14^a are employed, more or less downwardly and inwardly inclined at their forward edges, and the side pieces 14^a are connected at their upper portions by a front plate or board 15, and just below the front plate or board 15 of the hood B′ bearings 16 are produced in the side pieces or sections 14^a, which bearings are usually in the nature of slots, as is also best shown in Fig. 2.

Just within the front portions of the side pieces 14 of the body plate or board B guide-blocks 17 are removably secured, and these guide-blocks extend from a point near the bottom of the body to a point above its center. The space between these guide-blocks is that in which the leaves of the book C are placed from which copies are to be taken. The guide-blocks 17 are of different widths, so as to make the space between them larger or smaller to accommodate books of different dimensions, and the said guide-blocks preferably extend forward beyond the front surfaces of the side pieces 14 of the body.

Spring-arms 18 are pivoted upon the front lower portions of the side bars or pieces 14 of the body B, as is best shown in Fig. 1, and the free ends of these spring-arms are adapted to extend over the front face of the body B between the guide-blocks 17 and engage with a cover of the book C. Spring clamping-arms 19 are secured to the front faces of the guide-blocks 17, extending upward and forward beyond the upper ends of the said guide-blocks, as is best illustrated in Fig. 2.

A roller 20 is provided with reduced sections 21 near its ends adapted to enter the bearings 16 of the body, as is shown in Fig. 1. The said roller 20 is further provided with peripheral recesses 22, in which the upper ends of the clamping-arms 19 are fitted

to an engagement with the roller, serving to keep the roller in its bearings. The roller 20 extends beyond the sides of the body plate or board B, and at its left-hand end terminates in a knob 23, whereby the roller 20 may be operated by hand, and at its opposite end the said roller is provided with a flanged drum 24, the drum being attached to or integral with the roller. This drum 24 is brought into action when the roller 20 is to be operated through the medium of the carriage A′ of the type-writing machine. The roller 20 is further provided with series of exterior annular washers or cushions 25, of rubber or like material, and these washers or cushions 25 are adapted to engage with the uppermost leaf of that portion of the book C resting on the said body below the raid roller, so that when the roller 20 is turned in one direction the yielding contact between the roller and the leaf or page will cause the latter to be moved upward.

When the book C is placed in position in the holder, the front cover and the leaves or pages which are not to be copied are, together with the front cover, passed up through the hood B′, and these parts are permitted to drop over the upper edge of the holder, as is best shown in Fig. 2. As the leaf is moved upward by the action of the roller 20 the said leaf will be formed into a loop extending within the hood B′, and as the leaf thus looped passes from the roller it will naturally fall upon the upper leaves extending out from the holder, and the front inclined section 15 of the hood serves to prevent the leaf when carried upward and freed from the roller from again dropping downward to interfere with the action of the roller on the next leaf.

At the right-hand side of the body B of the holder an eye 26 or equivalent form of guide is secured above the drum 24 of the roller 20, and a second or similar guide or eye 27 is located at the same side of the body of the holder below the said drum, as is shown in Fig. 1, and at the same side of the holder, near its lower end, a third guide 28, preferably in the form of an eye, is located, which receives one end of a spring 29, and this spring may be a rubber band of suitable strength, as illustrated in Fig. 1. The upper end of the spring 29 is attached to the lower end of a cord 30. This cord is passed upward through the intermediate guide 27 and is looped or twisted preferably once around the drum 24 and is then carried up through the upper guide 26 on the holder and is attached to the carriage A′ of the type-writing machine either through the medium of the post or projection 10 (shown in Fig. 1) or through the medium of a hook secured at the upper end of the cord, which hook is made to engage with the left-hand end portion of the carriage. The extent to which the roller shall move the page at each revolution of the roller, for example, so as to move the leaf upward the distance of one, two, or three lines at each revolution, is controlled by a clip 31, removably fastened to that portion of the cord 30 extending from the guide 26 to the carriage of the type-writing machine. It will be observed that when the attachment is thus made to the said carriage as the carriage is moved in type-writing the copy the roller 20 is turned, and the leaf with which the roller is engaged will be proportionately moved upward.

The copy-holder is fastened to the desk at the left of the operator far enough away so that the carriage moving to the left will not come in contact with it. The tape or cord 30 is attached to the left-hand end of the carriage, and as the carriage travels to the right after writing a line it turns the roller of the copy-holder as much as it is set to turn until the copy is finished, and it is not necessary to touch the note-book, even though there be many pages to copy, until all of the pages desired have been copied. Of course it will be somewhat difficult to regulate the automatic operation of the device to suit every person's shorthand-notes; but it may be adjusted very close, and should it get behind in its work, which it may do in the copying of several pages, the roller can be turned forward with the hand by a slight movement and a second's loss of time.

In the detail operation of the device a book is opened at a point where it is desired to commence copying, and the front cover, together with the pages that are not to be copied from, are passed up through the hood B′ out over the top of the body of the holder, while the book-cover and the pages from which copies are to be taken rest upon the body B between the guide-blocks 17, the upper portion of said pages being immediately below the roller 20, and the cushioned surfaces 25 of said roller will be in frictional engagement with the uppermost leaf. The spring clamping-arms 19 hold the roller in said engagement with the uppermost page, and as the roller is turned to the left through the medium of the thumb-piece or knob 23 the cushioned portions of the roller will catch the surface of the leaf, and the top portion of the leaf will be gradually looped upward within the hood B′ until the leaf when freed from the roller falls over the upper portion of the body out of the way, whereupon the roller will be in engagement with the next leaf ready to carry it up in like manner until the roller is turned, and so on until all of the leaves in the book have been turned. This is the operation by hand.

In order to use the copy-holder with a type-writing machine, the book is fastened in the copy-holder in the same manner as has been described. As has been stated, the copy-holder is made fast to the desk or table on which the machine is placed at the left of the operator, and the tape or cord 30 is attached to the left-hand end of the type-writer carriage, as is shown in Fig. 1. When the cord or tape

30 is drawn upon by the movement of the type-writer carriage A′ moving to the right through the guides 26 and 27, the cord or tape is tightened on the spool or drum 24, turning the roller 20 through frictional contact with said drum or roller, which roller acts upon the leaves in the manner heretofore described, and as the cord or tape 30 is drawn upon the spring 29 is placed under tension, and when the cord or tape 30 is loosened the spring contracts and the tape or cord will slide back around the drum or spool 24, its normal position.

The clamp or clip 31 is to regulate the distance the roller 20 shall turn. The closer the clip 31 is carried to the upper guide 26 the shorter the distance the roller will turn, for the reason that when the spring contracts and draws the cord or tape 30 backward the clip 31 will be obliged to stop when it engages with the upper guide 26, and the remaining portion of the tape or cord will hang slack as the carriage of the type-writer moves from right to left, and when the carriage is drawn to the right to start another line the slack must first be taken up before the clip can be moved, so as to tighten the cord or tape around the said drum or roller.

Having thus described my invention, I claim as new and desire to secure by Letters Patent—

1. A copy-holder consisting of a body-section, a roller mounted to turn in the said body-section, which roller is provided with exterior cushioned surfaces practically in engagement with the front face of the body of the holder, spring-arms controlling the outward movement of the roller, means for turning the said roller, and a hood above the roller, open at its top and its bottom, for the purpose described.

2. A copy-holder consisting of a body-section, a roller mounted to turn in the said body-section, which roller is provided with exterior cushioned surfaces practically in engagement with the front face of the body of the holder, spring-arms controlling the outward movement of the roller, means for turning the said roller, and a hood above the roller, open at its top and at its bottom, guide-blocks located at the front face of the body, between which guide-blocks the book is placed from which copies are to be made, and clamps for the book located at the lower portion of the body and extending within the space between said guide-blocks, as set forth.

3. A copy-holder consisting of a body, a support for the body, a roller having spring-controlled support in the said body, the roller being mounted to turn upon the body, cushion-surfaces formed at the exterior of the said roller between its ends, and means substantially as described, for operating the said roller, for the purpose set forth.

4. In a copy-holder, the combination with a body, a support therefor, a spring-controlled roller mounted to turn opposite a face of the said body and provided with exterior cushioned surfaces for approximate engagement with the side face of the body, a knob at one end of the said roller and a drum fixed at the opposite end, of a tension device attached to the body at one side, a cord or tape, guides for the cord or tape carried by the body, which cord or tape is looped around the said drum between the guides and is attached at one end to said tension device, as and for the purpose described.

5. In a copy-holder, the combination with a body, a support therefor, a spring-controlled roller mounted to turn opposite a face of the said body and provided with exterior cushioned surfaces for approximate engagement with the front face of the body, a knob at one end of the said roller and a drum fixed at the opposite end, of a tension device attached to the body at one side, a cord or tape, guides for the cord or tape carried by the body, which cord or tape is looped around the said drum between the guides and is attached at one end to said tension device, a clip adjustably secured to the said cord or tape at a point between its upper end and the uppermost guide, and a hood open at the top and at the bottom, carried by the body of the holder and located above the said roller, for the purposes set forth.

6. The combination with the carriage of a type-writer, of a copy-holder provided with means for moving a sheet carried by the holder, and means for operating the sheet-moving means from the carriage of the type-writer, as set forth.

7. The combination with the carriage of a type-writer, of a copy-holder provided with a roller for engaging a sheet to move it and means for operating the roller from the carriage of the type-writer, as set forth.

8. A copy-holder provided with a roller for engaging a sheet to move it, said roller carrying a drum at one end, a spring secured to the holder, and a cord passed around the drum of the roller, and having one end secured to the spring and its other end adapted for connection with the carriage of a type-writer, as set forth.

9. A copy-holder, comprising a body, an open-ended hood at one end of the body, and means carried by the body at one end of the hood for moving a sheet carried by the body up through said hood, as set forth.

10. A copy-holder, comprising a body, a flaring and open-ended hood at one end of the body, and a roller mounted in the body at the smaller end of the hood, as and for the purpose set forth.

In testimony whereof I have signed my name to this specification in the presence of two subscribing witnesses.

SAMUEL COOK HOYLE.

Witnesses:
G. W. McMICHAEL,
A. L. DUNMORE.