US 20050149226A1

(19) United States

(12) Patent Application Publication (10) Pub. No.: US 2005/0149226 A1

Stevens et al. (43) Pub. Date: Jul. 7, 2005

(54) WAREHOUSING SYSTEM AND METHOD

(75) Inventors: **John Stevens**, Ontario (CA); **Paul Waterhouse**, Ontario (CA); **Mike Vandenberg**, Ontario (CA)

Correspondence Address:
MCGINN & GIBB, PLLC
8321 OLD COURTHOUSE ROAD
SUITE 200
VIENNA, VA 22182-3817 (US)

(73) Assignee: **eBox, Inc.**, Toronto (CA)

(21) Appl. No.: **10/892,500**

(22) Filed: **Jul. 16, 2004**

Related U.S. Application Data

(63) Continuation-in-part of application No. 10/474,353, filed on Oct. 9, 2003.

(30) **Foreign Application Priority Data**

Apr. 9, 2002 (WO) PCT/US02/10927

Publication Classification

(51) **Int. Cl.**[7] **G06F 7/00**

(52) **U.S. Cl.** **700/214**

(57) **ABSTRACT**

A warehousing system includes a container for storing at least one item, a first electronic (e.g. radio frequency identification (RFID)) module associated with the first container, and a controller which wirelessly communicates with first electronic module, for directing a transfer of said at least one item to and/or from said first container. The inventive system may include, for example, a hybrid retail/warehouse system which includes a facility having a shelving area, and a picking area adjacent to the shelving area, and a layout so as to minimize a picking area and a walking distance between a picking area and a shelving area.

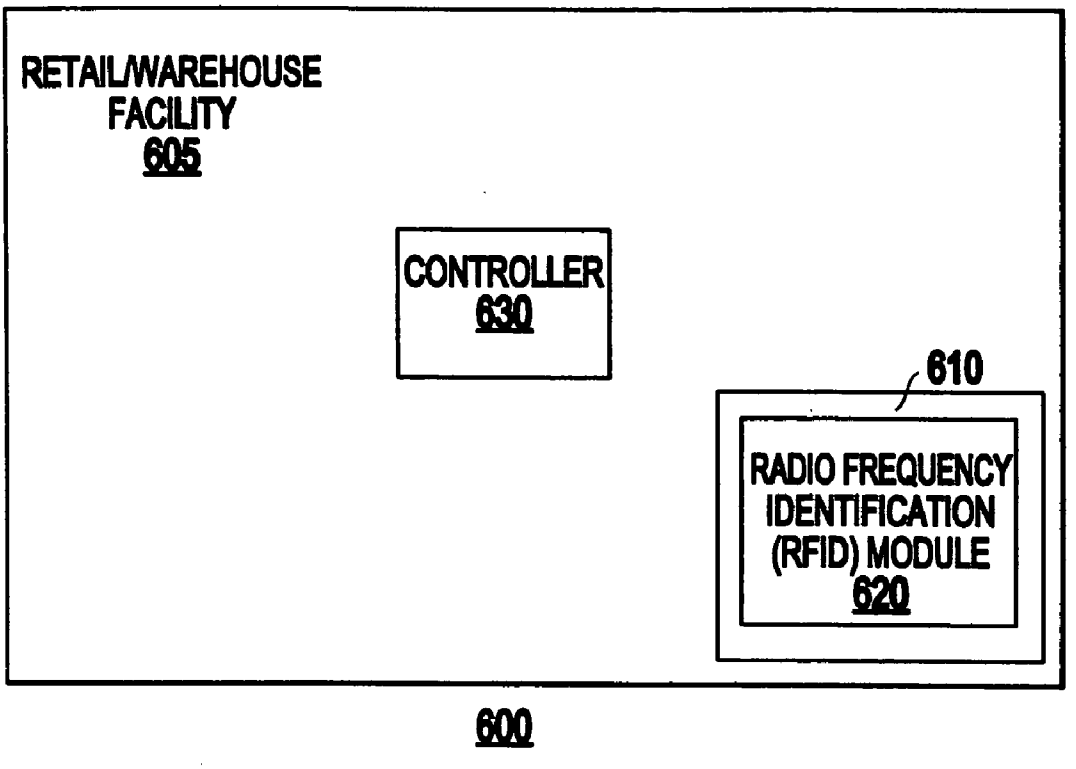

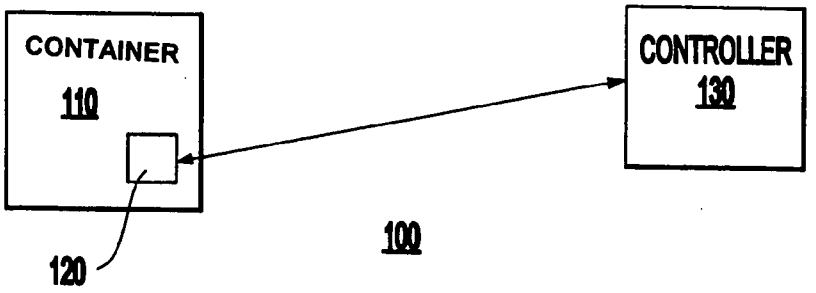

FIG.1

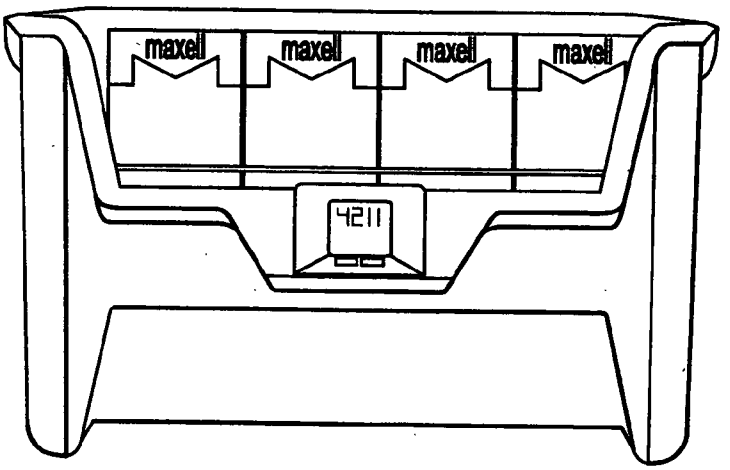

FIG.2A

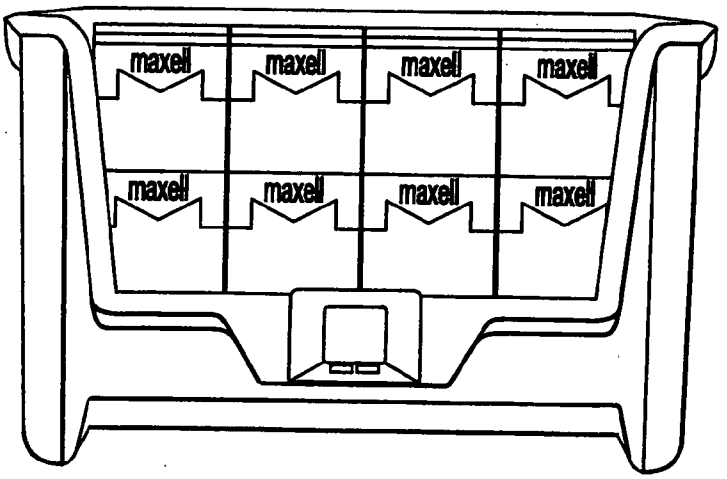

FIG.2B

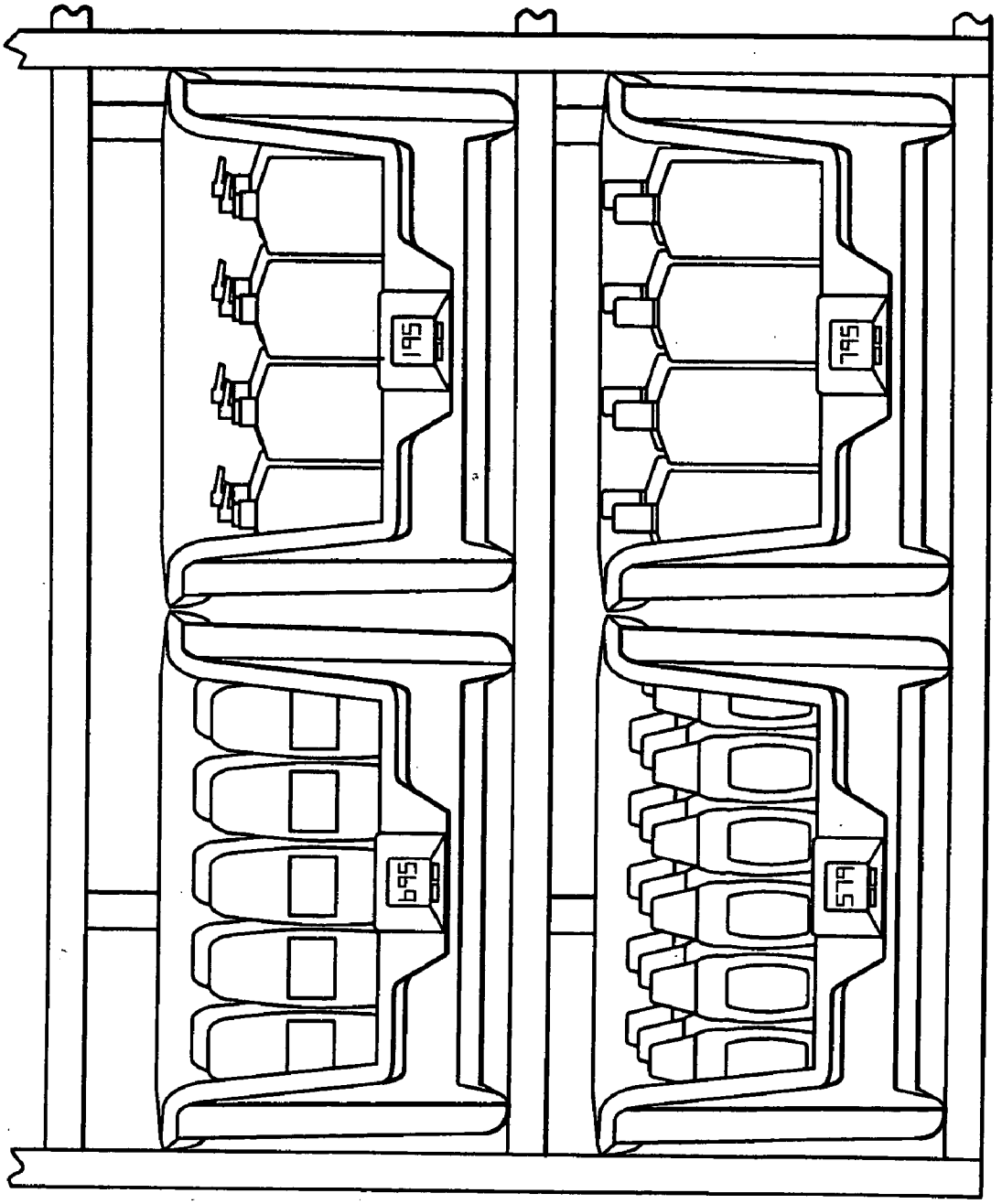

FIG.2D

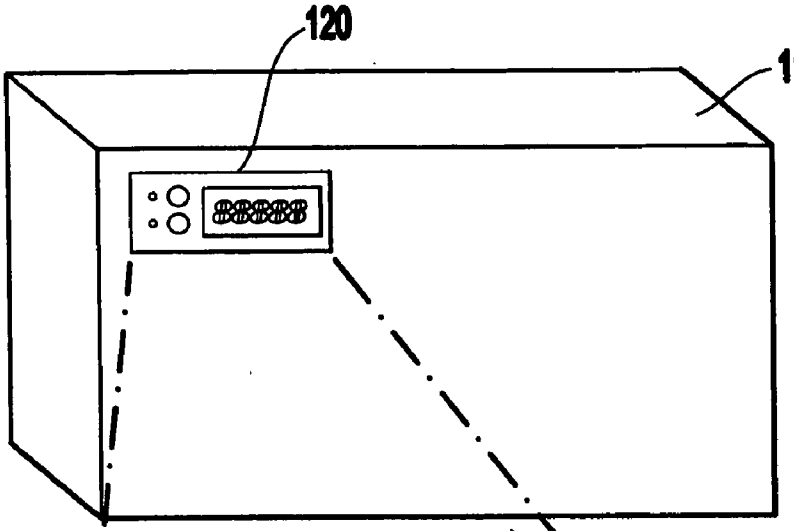

FIG.3A

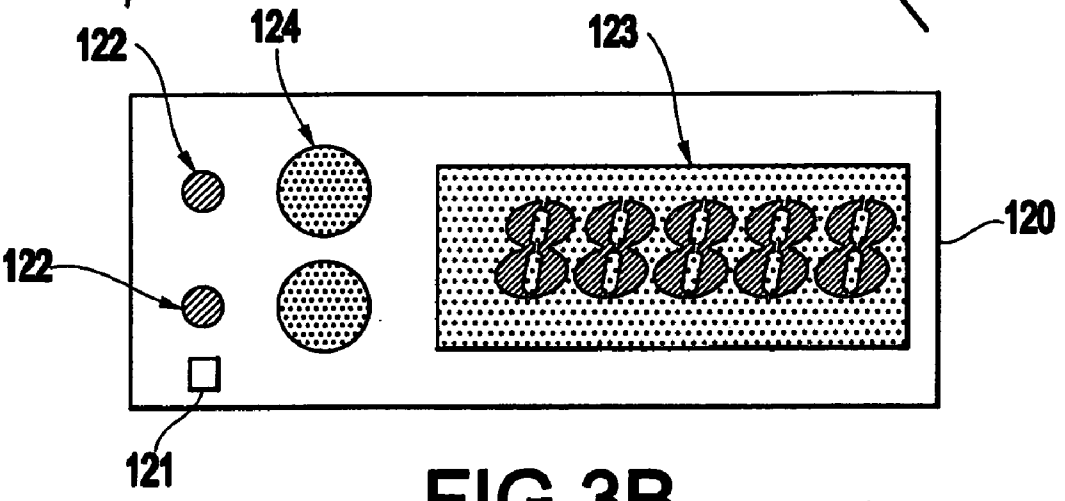

FIG.3B

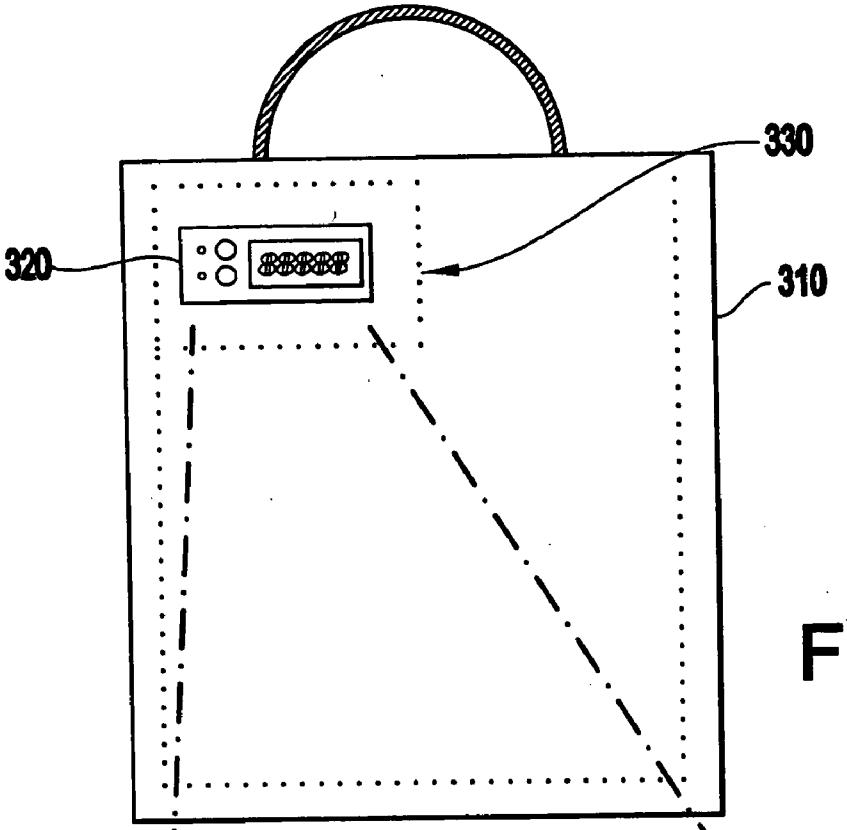

FIG.4A

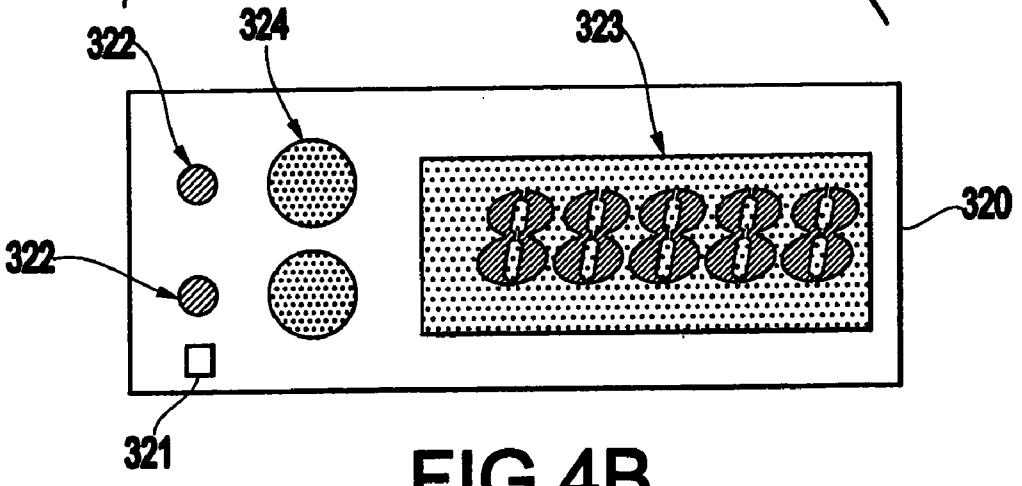

FIG.4B

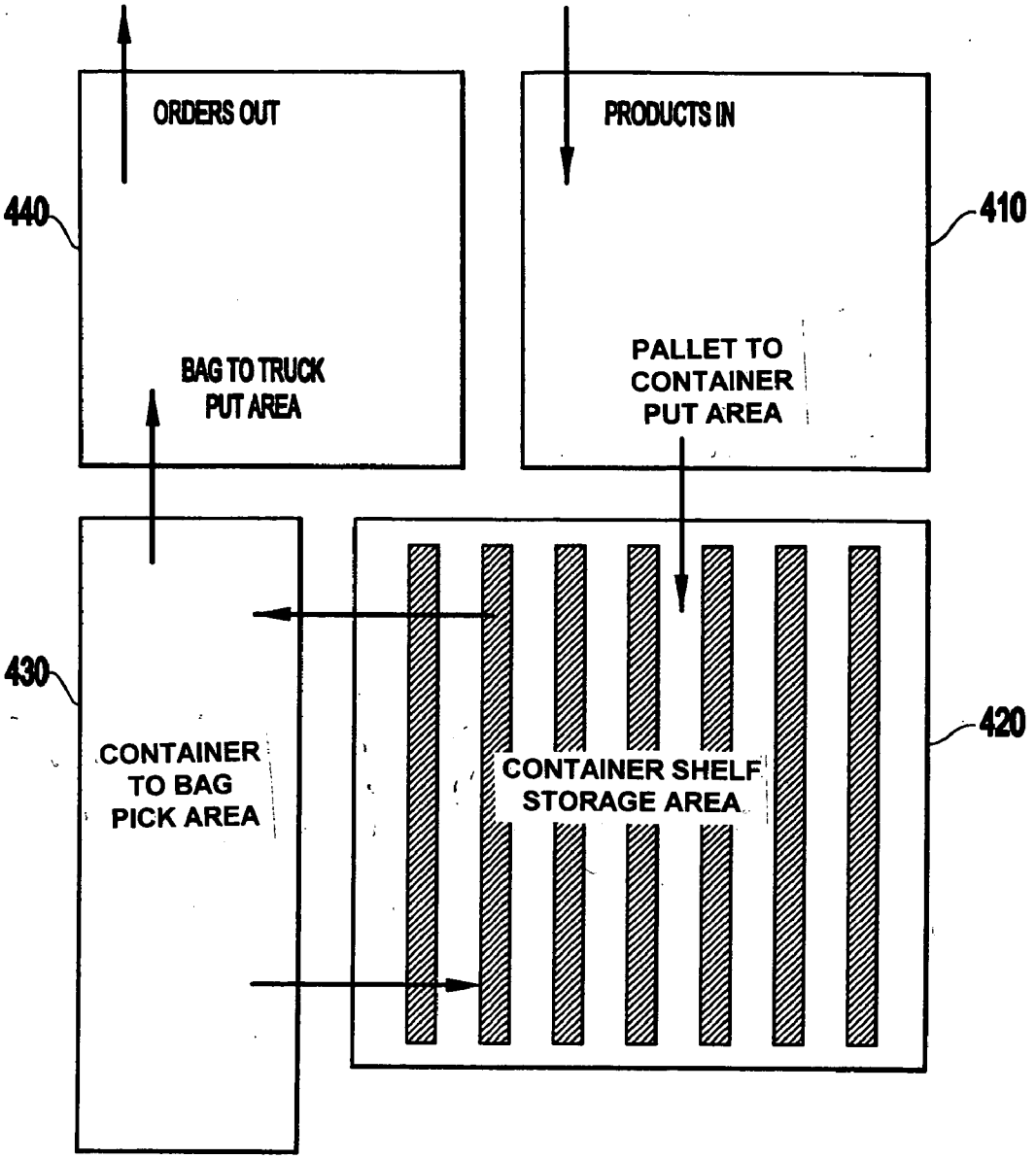
ORDERS OUT
PRODUCTS IN
440
410
BAG TO TRUCK PUT AREA
PALLET TO CONTAINER PUT AREA
430
CONTAINER TO BAG PICK AREA
CONTAINER SHELF STORAGE AREA
420

FIG.5A

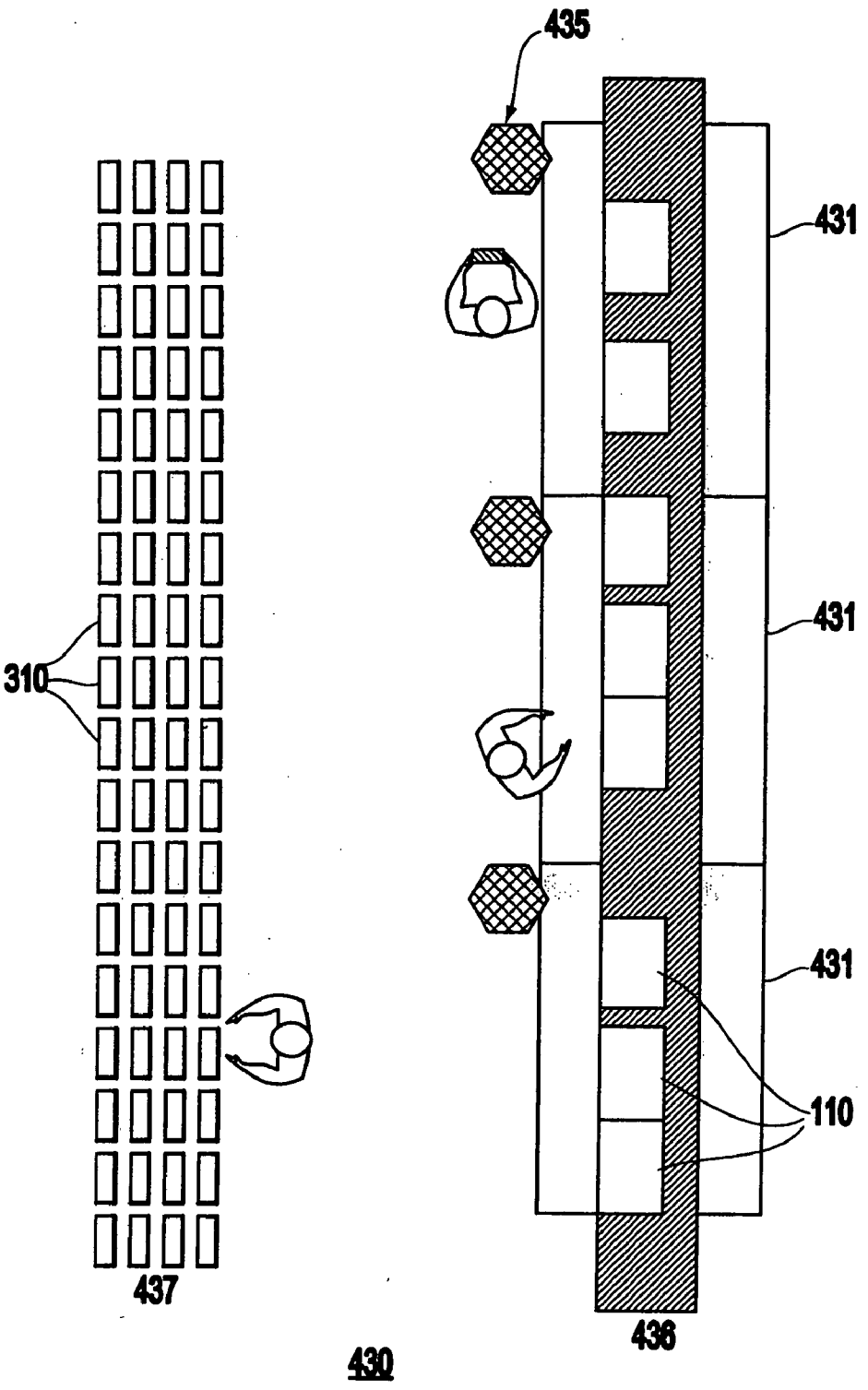

FIG.5B

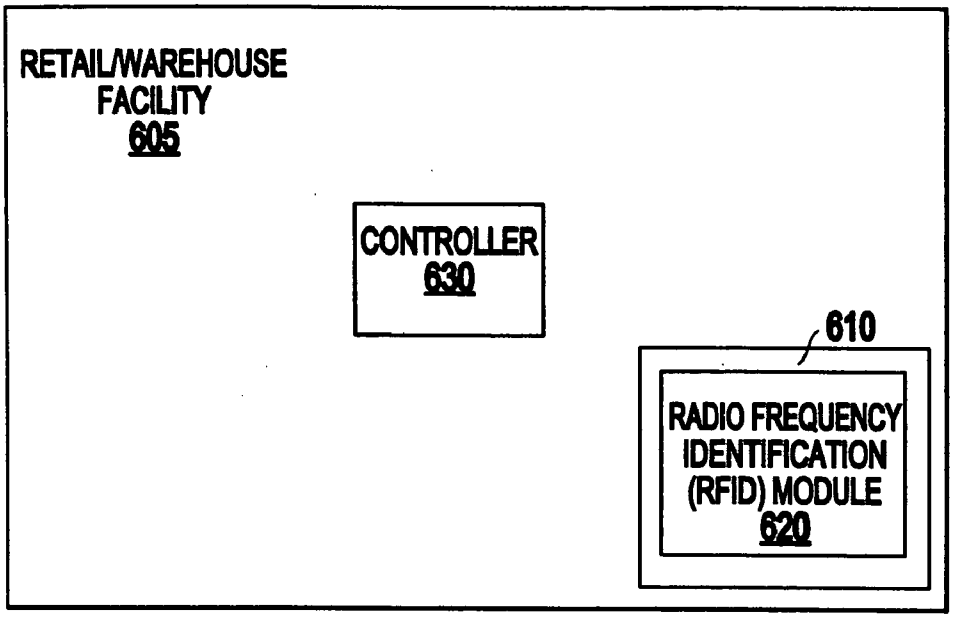
RETAIL/WAREHOUSE FACILITY
605
CONTROLLER
630
610
RADIO FREQUENCY IDENTIFICATION (RFID) MODULE
620
600

FIG.6

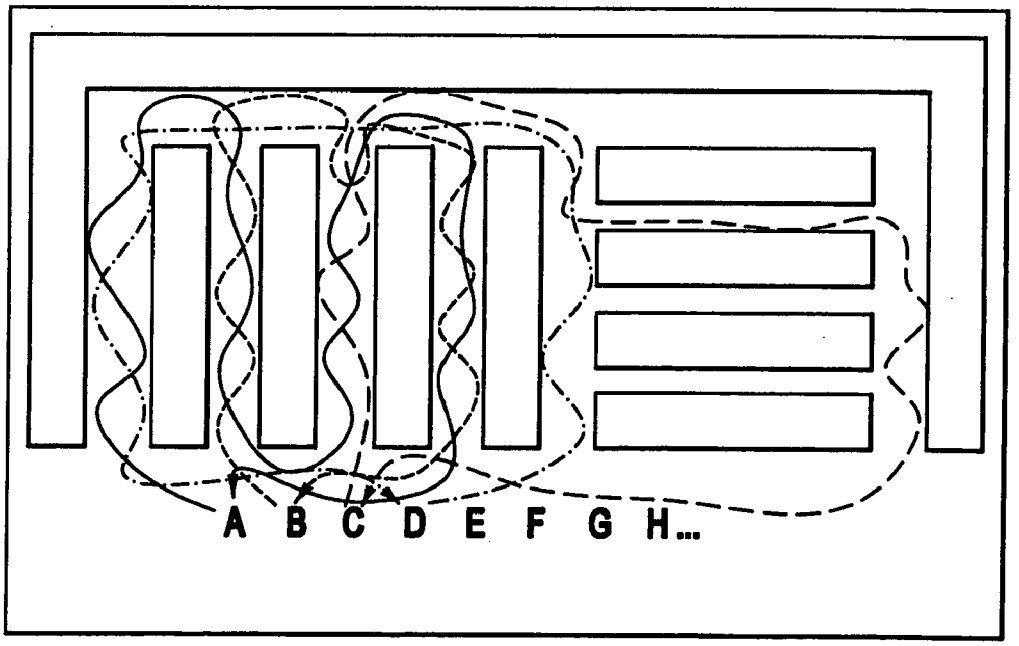
A B C D E F G H...

FIG.7A

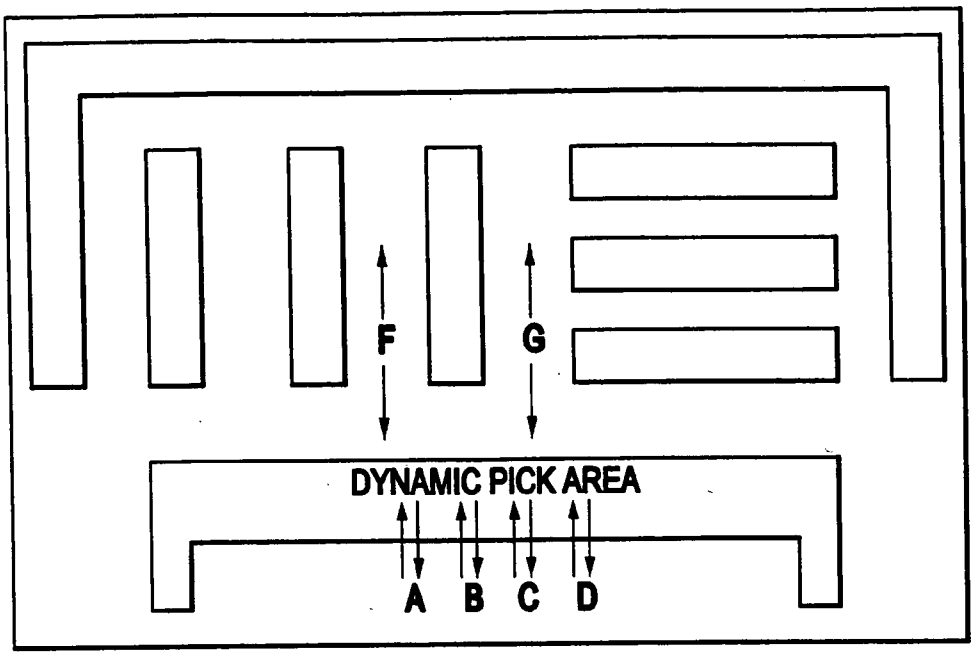

FIG.7B

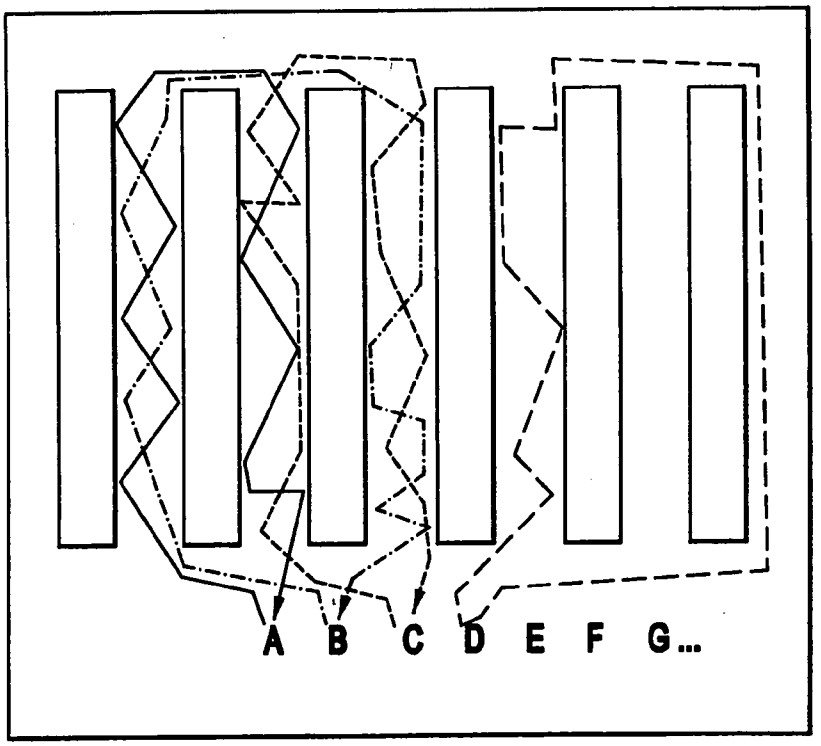

FIG.7C

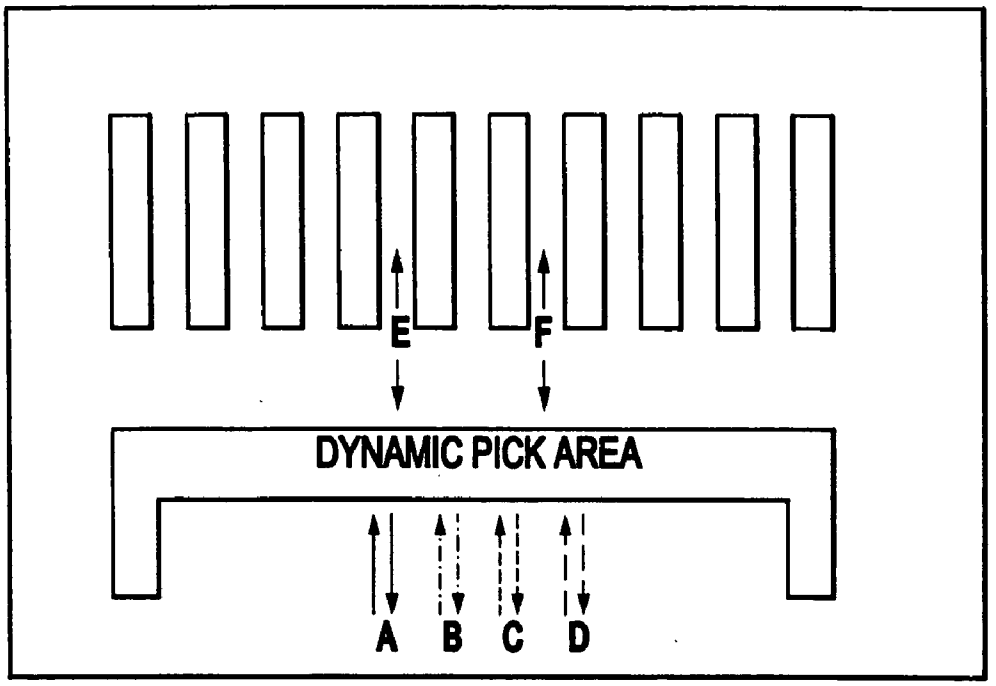
E
F
DYNAMIC PICK AREA
A
B
C
D

FIG.7D

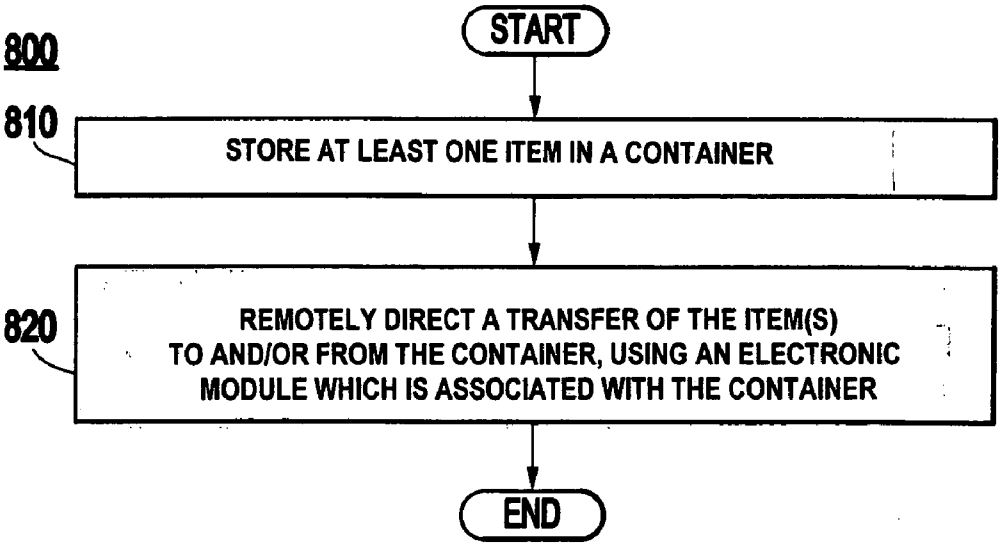
800
START
810
STORE AT LEAST ONE ITEM IN A CONTAINER
820
REMOTELY DIRECT A TRANSFER OF THE ITEM(S) TO AND/OR FROM THE CONTAINER, USING AN ELECTRONIC MODULE WHICH IS ASSOCIATED WITH THE CONTAINER
END

FIG.8

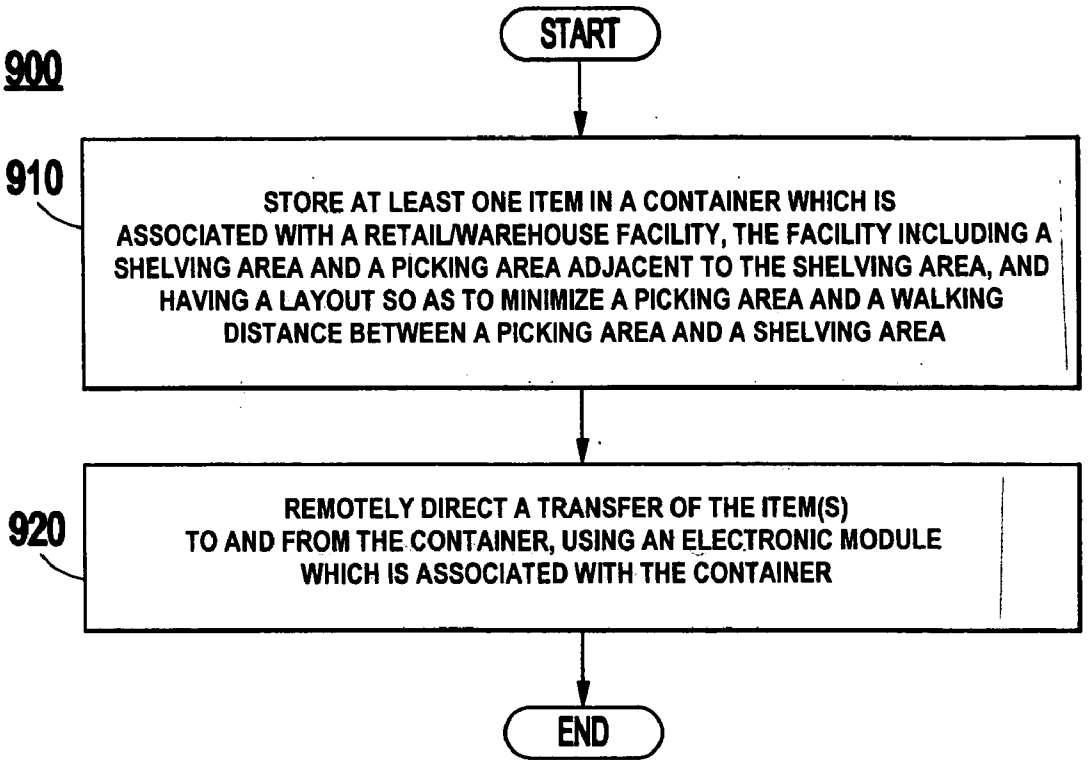
900
START
910
STORE AT LEAST ONE ITEM IN A CONTAINER WHICH IS ASSOCIATED WITH A RETAIL/WAREHOUSE FACILITY, THE FACILITY INCLUDING A SHELVING AREA AND A PICKING AREA ADJACENT TO THE SHELVING AREA, AND HAVING A LAYOUT SO AS TO MINIMIZE A PICKING AREA AND A WALKING DISTANCE BETWEEN A PICKING AREA AND A SHELVING AREA
920
REMOTELY DIRECT A TRANSFER OF THE ITEM(S) TO AND FROM THE CONTAINER, USING AN ELECTRONIC MODULE WHICH IS ASSOCIATED WITH THE CONTAINER
END

FIG.9

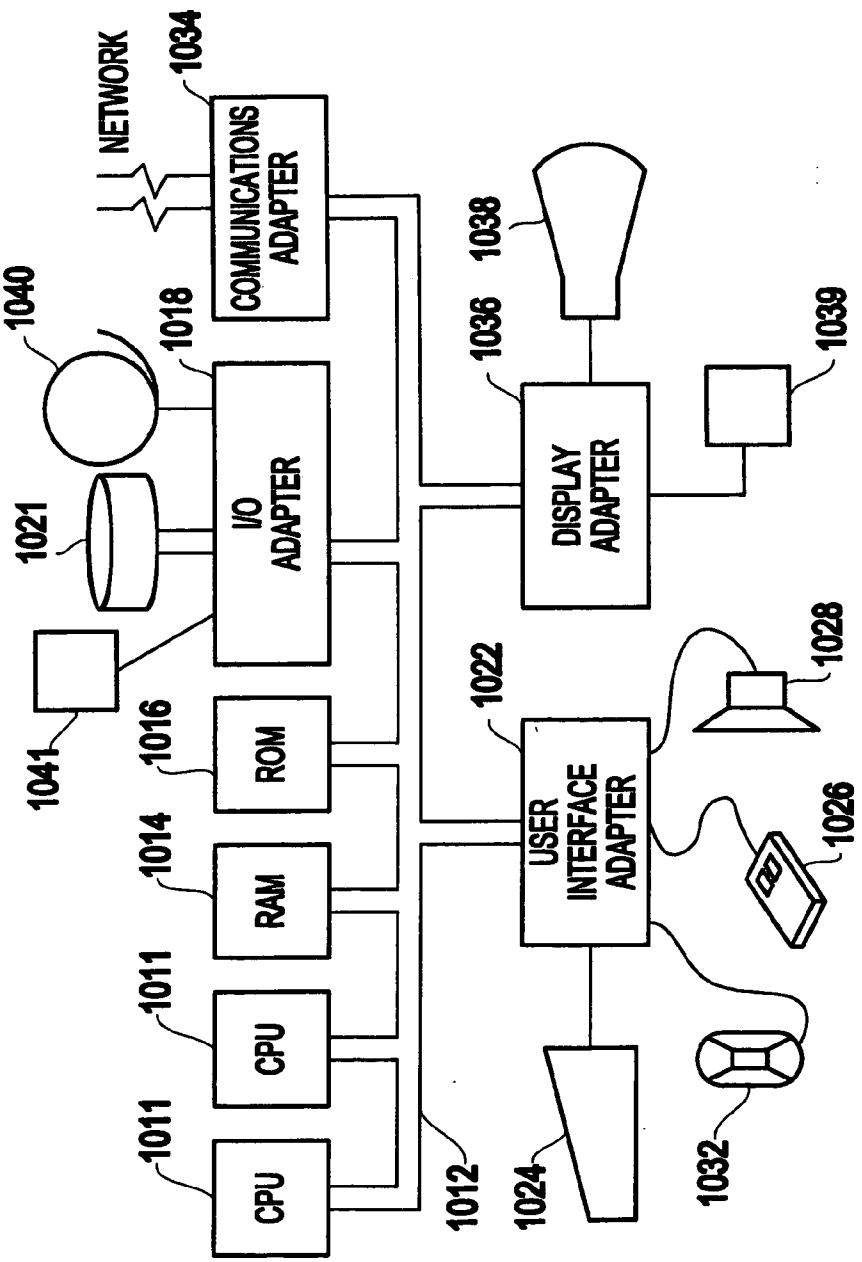
CPU
1011
CPU
1011
1012
RAM
1014
ROM
1016
I/O ADAPTER
1018
1021
1041
1040
NETWORK
COMMUNICATIONS ADAPTER
1034
USER INTERFACE ADAPTER
1022
1024
1032
1026
1028
DISPLAY ADAPTER
1036
1038
1039

FIG.10

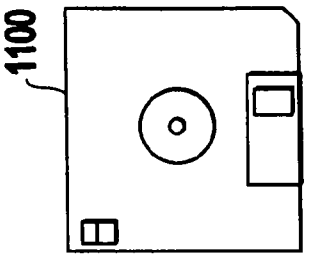
1100

FIG.11

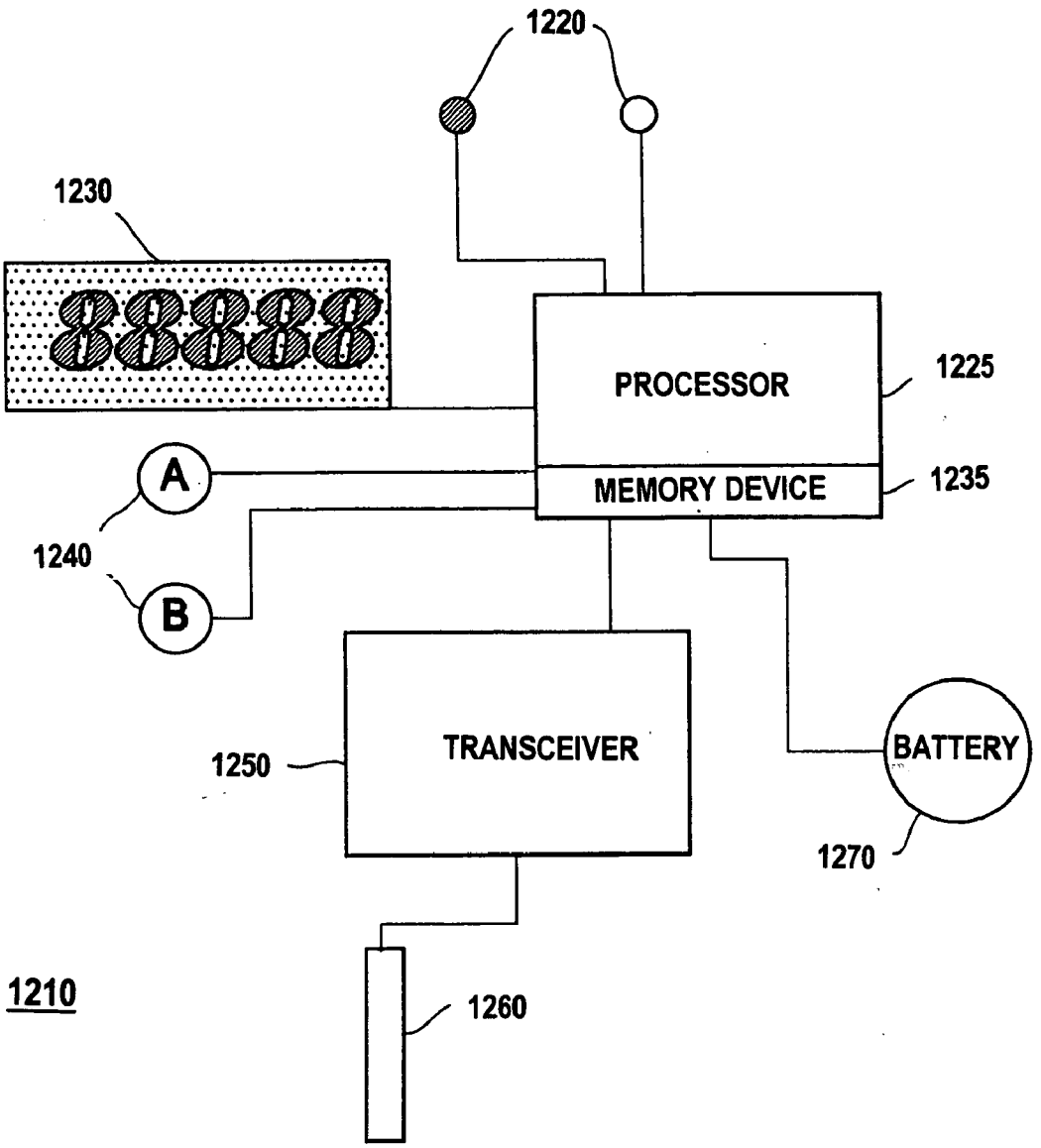
1220
1230
88888
PROCESSOR
1225
A
MEMORY DEVICE
1235
1240
B
TRANSCEIVER
1250
BATTERY
1270
1210
1260

FIG. 12

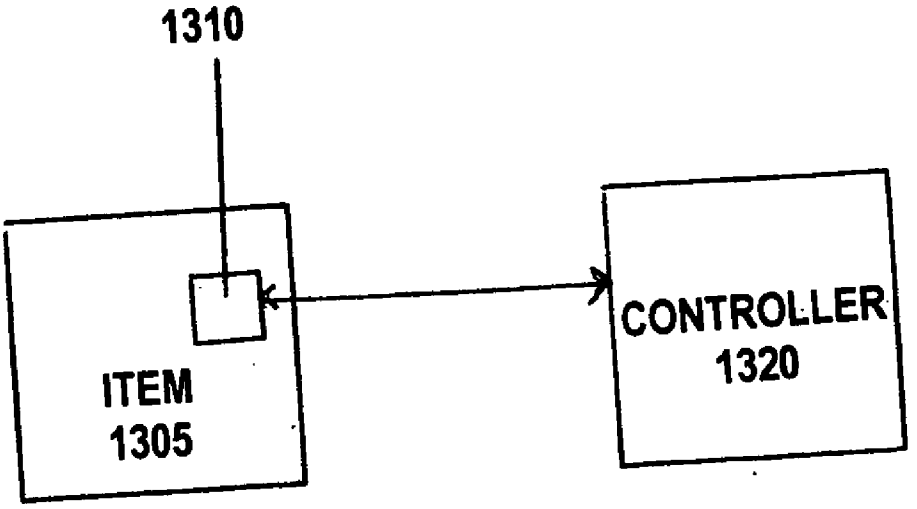

FIG. 13

WAREHOUSING SYSTEM AND METHOD

CROSS REFERENCE TO RELATED APPLICATIONS

[0001] This application is a Continuation-in-Part (CIP) Application of U.S. patent application Ser. No. 10/474,353 which was filed on Oct. 9, 2003, is assigned to the present assignee, and is incorporated herein by reference, and this Application claims the benefit of U.S. patent application Ser. No. 10/474,353.

[0002] U.S. patent application Ser. No. 10/474,353 claimed the benefit of U.S. Provisional Application No. 60/282,150 which was filed on Apr. 9, 2001 by John Stevens, and assigned to the present assignee, and U.S. Provisional Application No. 60/359,350 which was filed on Feb. 26, 2002 by John Stevens, et al. and assigned to the present assignee, and which were incorporated therein by reference.

BACKGROUND OF THE INVENTION

[0003] 1. Field of the Invention

[0004] The present invention generally relates to a warehousing system and method, and more particularly, a warehousing system and method which may be used in a hybrid retail/warehouse facility.

[0005] 2. Description of the Related Art

[0006] Many inventory-based businesses rely exclusively or heavily on the Internet. However, such businesses (e.g., dotcoms) have often failed, primarily because there are simply too few customers to carry costs. That is, the costs of fulfillment and operating overhead could simply not be covered with the actual customer base. However, the Internet customer base continues to grow by 25% each year, and so the potential for future profits appears evident. For instance, Amazon.com recently had its first profitable quarter ever.

[0007] A major barrier to growth for any inventory-based business is managing the physical warehouse, physical inventory, and fulfillment from warehouse to customer. Many companies sell "solutions" that include pick-to-light (PTL) or Dynamic Picking Systems, batch picking with tilt tray sorting, automated crane systems. A major problem with such conventional systems is that volume and throughput commitments must be established before capital and systems commitments are made. If the business plan is wrong and a warehouse faces unexpected expansion, it becomes quite expensive. If the business plan is wrong and the warehouse faces below target throughput, it is a financial disaster. Finally, if throughput is predictable, existing legacy systems are too expensive to change.

[0008] Any new initiatives especially retail based ventures must take a long hard look at fundamental economics, value chains and operating costs. For instance, one of the major economic inefficiencies in dotcom businesses is the Internet's dependency upon expensive "old economy" fulfillment channels. In addition, the dotcoms assume that any Internet retail business (i.e., "the e-tailer") was just like mail order.

[0009] After the dotcom collapse none of the fulfillment companies filed for Chapter 11. All claimed 10% to 20% annual growth in new business as a result of the Internet and appear to have had positive Internet cash flows from day one. However the high costs and inefficiencies of these fulfillment channels cause conventional systems to be expensive and inefficient and were directly responsible for the demise of many dotcoms.

[0010] More specifically, three basic types of fulfillment systems have been used for retail Internet-based businesses: Central High Volume Automated Warehouse (National Fulfillment Channel), Regional Medium Volume Warehouse (Regional Fulfillment Channel), and Regional Low Volume Store/Warehouse (Regional Fulfillment Channel) Many examples exist for the first type of system or mail-order model, some successful and some not so successful. The best known success of the second type of conventional system is Corporate Express, with revenues of over $4 billion. In this second type of system, inventive system **100** (e.g., the inventive fulfillment chain) can cut fulfillment costs by as much as 50%.

[0011] The third type of system (e.g., Store/Warehouse approach) has worked on a small scale and certainly minimizes capital required to launch any Internet business. However, merely using conventional retail store systems does not have the ability to scale. In other words, merely utilizing a different fulfillment channel without major modifications to the store does not make economic sense for many reasons.

[0012] The major advantage of the third type of system (e.g., the retail Store/Warehouse approach) is that the sunk costs associated with inventory and inventory management can be shared by both the Internet and direct in-store retail sales. However, this type of system has two major shortcomings that make it not scalable.

[0013] First, the "value chain penalty". That is the product has come from manufacture to a pallet based central warehouse, broken down into "eaches" (e.g., single items), shipped to the store and prepared for shelf-based in-store sales. It has been handled maybe four or five times. The sunk cost for the product on the in-store shelf may be as much as 12% higher than if it were in an optimized "two touch" warehouse environment.

[0014] Second, inefficiencies created for the Internet business by an in-store environment where picking eaches and management of inventory is complicated and costly. For instance, many warehouse systems involve placing products on shelves and picking the products based on lights and displays attached to the shelf (e.g., a so-called "Pick and Put to Light" (PTL) system). These systems typically require physical addresses for each item and also require that a "picker" travel to the warehouse shelf to get an item.

[0015] Therefore, such conventional systems are inefficient and time consuming. For example, lead to pick rates of 100 or less per hour per employee are not uncommon. Indeed, the inventors believe the warehouse picking penalty for the Internet business might be as much as 4% on sales.

[0016] Thus, in the end the products will either cost more for the Internet customer, in addition to the actual fulfillment costs, or the products will cost more for in-store customer.

[0017] In addition, many warehousing systems, product distribution systems, and methods for storing items (e.g., medical devices such as heart valves, stents, endoscopes, sutures, shunts, etc.) are currently very inefficient. For

example, many such items have an expiry date (e.g., a shelf life) after which the item is no longer usable and is thus, discarded. Currently, many such items are not used by their expiry date and are, therefore, discarded due to an inability to efficiently and effectively track inventory, store or warehouse these items.

SUMMARY OF THE INVENTION

[0018] In view of the foregoing and other problems, drawbacks, and disadvantages of the conventional systems and methods, an object of the present invention is to provide a cost and space efficient warehousing system and method which optimizes each employee's time and leads to highly efficient putting away" (e.g., re-shelving) of products and highly efficient picking of products, and which may be used in a hybrid retail/warehouse facility.

[0019] The inventive warehousing system includes a container (e.g., tote, package, packet, wrapper, envelope, pouch, crate, pallet, bin, cylinder, box, carton, bag, can, etc.) for storing at least one item (e.g., an item of merchandise), an electronic (e.g., radio frequency identification (RFID)) module associated with the container, and a controller which wirelessly communicates with the module, for directing a transfer of the item(s) to and from the container.

[0020] The inventive warehousing system may also include a second container for receiving the item(s) from the first container. In this case the controller may also direct a transfer of the item(s) from the first container to the second container. In addition, the second container may be associated with a second electronic (e.g., RFID) module which wirelessly communicates with the controller, for facilitating a transfer of the item(s) from the first container to the second container.

[0021] More specifically, the electronic module may include a light emitting device which is activated to indicate that the item(s) should be transferred to and from the first container. The module may also include a display device for indicating a content of the container (e.g., first container).

[0022] In another aspect, the present invention includes a hybrid retail/warehouse system which includes a retail/warehouse facility including a shelving area, and a picking area adjacent to said shelving area, and having a layout so as to minimize a picking area and a walking distance between a picking area and a shelving area. The system also includes a container associated with the retail/warehouse facility for storing at least one item (e.g., item of merchandise) an electronic (e.g., RFID) module associated with the container, and a controller which wirelessly communicates with the module, for directing a transfer of the item(s) to and from the container.

[0023] Further, the retail/warehouse facility may store item which is personally selected by in-store customers and remotely selected by out-of-store (e.g., Internet) customers.

[0024] In another aspect, a warehousing method according to the present invention includes storing at least one item in a container, and remotely directing a transfer of the item(s) to and from the container, using a electronic (e.g., Radio Frequency Identification Device (RFID) module) which is associated with the container. The inventive method may also include remotely assigning a bag (e.g., second container) to receive the item(s) from the container.

[0025] In another aspect, a hybrid retail/warehouse method according to the present invention includes storing at least one item in a container which is associated with a retail/warehouse facility, the facility including a shelving area, and a picking area adjacent to said shelving area, and having a layout so as to minimize a picking area and a walking distance between a picking area and a shelving area. The method also includes remotely directing a transfer of the item(s) to and from the container, using an electronic (e.g., RFID) module which is associated with the container. Further, the item may be personally selected by in-store customers and/or remotely selected by out-of-store customers.

[0026] The present invention may also include a signal-bearing media tangibly embodying a program of machine-readable instructions executable by a digital data processor to perform the inventive warehousing method (e.g., hybrid retail/warehousing method).

[0027] Further, in the present invention, the container may include a box, pallet, plastic package, or bag, etc. Further, the container may store (e.g., house) a single item.

[0028] In addition, the controller can wirelessly communicate with the first electronic module via a low frequency signal (e.g., radio frequency signal).

[0029] In another aspect, the present invention includes a pallet for storing an item, the pallet includes a body which contains the item, and an electronic identification module attached to the body.

[0030] In another aspect, the present invention includes a package for storing an item. The package includes a body which contains the item, and an electronic identification module attached to the body.

[0031] Further, in the present invention the electronic module (e.g., the first electronic module) may include an antenna for facilitating the communication with the controller. The antenna may be small or large relative to the size of the container. Specifically, the antenna may be large and may be formed on at least one side of the container.

[0032] Further, the electronic module (e.g., first electronic module) may be integrally formed with the container (e.g., first container). That is, the entire body of the container may be available for including features of the electronic module. For example, if the container is a plastic package having 6 sides (e.g., a tetrahedron-shaped package) the antenna may be integrally formed (e.g., embedded in) on one or more of the six sides of the package.

[0033] In another aspect, the present invention includes a container for containing an item. The container includes a body which contains the item, and an electronic module integrally formed with (e.g., embedded in) the body. For example, as noted above, the body may include an antenna coupled to the electronic module for facilitating wireless communication with the electronic module. For example, the body may include a plurality of sides, the antenna being integrally formed with at least one of the plurality of sides. For example, the antenna may be integrally formed with all of the plurality of sides.

[0034] In another aspect, the present invention includes a package for containing an item. The package includes a body which contains the item, and an electronic module integrally formed with the body.

[0035] In another aspect, the present invention includes a pallet for containing an item. The pallet includes a body which contains the item, and an electronic module integrally formed with the body.

[0036] With its unique and novel features, the present invention optimizes each employee's time and leads to highly efficient put away of products and highly efficient picking of products. The invention, therefore, offers affordable, state-of-the-art technology for managing and improving retail and warehouse operations. The inventive system and method may also be conveniently offered as an independent or integrated solution to supply chain needs.

BRIEF DESCRIPTION OF THE DRAWINGS

[0037] The foregoing and other purposes, aspects and advantages will be better understood from the following detailed description of a preferred embodiment of the invention with reference to the drawings, in which:

[0038] **FIG. 1** is a schematic drawing illustrating an inventive warehousing system **100**;

[0039] **FIG. 2A-2B** illustrate a container that may be used in the inventive system **100** according to the present invention;

[0040] **FIG. 2C-2D** illustrate examples of how containers may be arranged on shelves according to the present invention;

[0041] **FIG. 3A** provides a detailed illustration of a container which may be used in the inventive system **100**;

[0042] **FIG. 3B** illustrates an electronic module which may be associated with a container in the inventive system **100**;

[0043] **FIG. 4A** provides a detailed illustration of a smart bag (e.g., container) which may be used in the inventive system **100**;

[0044] **FIG. 4B** illustrates an electronic module which may be associated with a smart bag in the inventive system **100**;

[0045] **FIG. 5A-5B** are schematic drawings illustrating a layout of an inventive warehousing system **100** according to the present invention;

[0046] **FIG. 6** illustrates an inventive hybrid retail/warehouse system **100** according to the present invention;

[0047] **FIG. 7A** illustrates a conventional warehouse system, and **FIG. 7B** illustrates a comparably-sized warehouse utilizing the inventive hybrid retail/warehouse system **600**;

[0048] **FIG. 7C** illustrates a conventional warehouse system, and **FIG. 7D** illustrates a comparably-sized warehouse utilizing the inventive hybrid retail/warehouse system **600**;

[0049] **FIG. 8** is a flow chart illustrating an inventive warehousing method **800** according to the present invention;

[0050] **FIG. 9** illustrates an inventive hybrid retail/warehouse method **900** according to the present invention;

[0051] **FIG. 10** illustrates a typical hardware configuration which may be used for implementing the system and method according to the present invention;

[0052] **FIG. 11** illustrates an example of a signal-bearing media which may be used to implement the system and method according to the present invention;

[0053] **FIG. 12** illustrates the details of an electronic module which may be associated with a container in the inventive system **100**; and

[0054] **FIG. 13** illustrates another aspect of the present invention which includes an item **1305** to be warehoused, and a system **1300** for warehousing the item **1305**.

DETAILED DESCRIPTION OF PREFERRED EMBODIMENTS OF THE INVENTION

[0055] Referring now to the drawings, and more particularly to **FIGS. 1-13**, there are shown preferred embodiments of the system and method according to the present invention.

[0056] As shown in **FIG. 1**, an inventive warehousing system **100** includes a container (e.g., tote, package, packet, wrapper, envelope, pouch, crate, pallet, bin, cylinder, box, carton, bag, can, etc.) **110** for storing at least one item of merchandise, an electronic (e.g., first radio frequency identification (RFID)) module **120** which is associated with the first container, and a controller **130** which wirelessly communicates with the module, for directing a transfer of the item(s) to and from the first container.

[0057] The inventive warehousing system **100** is especially useful for storing an item (e.g., one or more items) in a container. The system **100** may be especially efficient for warehousing (e.g., storing) items having an expiry date.

[0058] For example, in the inventive system, a medical device (e.g., a single medical device) such as a heart valve, stent or shunt may be stored in a package (e.g., container).

[0059] As described below, the inventive system **100** optimizes each employee's time and leads to highly efficient "put away" (e.g., shelving) of items and highly efficient "picking" of items. The inventive system **100** is based in part on a wireless container system that may use display modules and short range low frequency RF transmitted through loop antennas similar to those used for grocery store pricing modules.

[0060] In addition, as shown in **FIGS. 2A-2B**, the container **110** may include a tote for easily transferring items to and from the container.

[0061] The container **110** used in the inventive system **100** may be formed of varying dimensions and may be used to store several items. For example, the container **110** may be small enough to hold bolts and spices, or large enough to hold 50 lb bags of dog food. In fact, for very large items the container **110** may resemble a pallet in a pallet-based system.

[0062] For instance, the container **110** may have suitable dimensions (e.g., approximately 18"×18" by 24" in an exemplary non-limiting embodiment) and may be made from conventional materials (e.g., plastic). The container **110** may be smaller or larger, and a warehouse may use a plurality of containers **110** having a variety of sizes. In addition, as shown in **FIGS. 2C-2D**, the container **110** may be easily stored on store shelves to provide for a very neat and organized presentation of the items.

[0063] In addition, as shown in **FIG. 3A**, associated with each container is an electronic module **120** (e.g., radio frequency identification module (RFID)). For example, the electronic module **120** may be affixed (e.g., attached) to the container **110**. More specifically, the module **120** may be a wireless battery operated module capable of two-way communication.

[0064] As shown in **FIG. 3B**, each module **120** may include a memory device **121** (e.g., semiconductor memory; random access memory (RAM) for storing a unique identification (ID) number, two light emitting devices **122** (e.g., light emitting diodes (LEDs)) which may have different colors (e.g., red and green), a display device **123** (e.g., liquid crystal display (LCD)) which may include a five-digit display, and at least one device **124** (e.g., button) for activating/deactivating a feature of the module **110** (e.g., the LED, display device, etc.).

[0065] Of course, many variations of the module **120** configuration are possible. The module **120** may use a low power complementary metal oxide semiconductor (CMOS) circuitry and, with a standard lithium battery, will operate for a period of many years. The memory device **121** may also store button pushes or other parameters associated with the status of the container (e.g., weight, temperature, etc.). The memory device **121** may also store identification numbers (e.g., UPC) corresponding to items which are contained in the container **110** or which are to be transferred to or from the container **110**.

[0066] The inventive warehousing system **100** also includes a controller **130** which wirelessly communicates with the module **120**. The controller **130** directs a transfer of the item(s) to and from the container **110**.

[0067] For example, the controller **130** may include a processor (e.g., microprocessor), memory device and two way radio device (e.g., transmitter/receiver). For instance, the controller **130** may include a computer system which is capable of directing a radio transmitting/receiving function. For instance, the controller **130** may wirelessly communicate with the module **120** using low frequency (e.g., 300 khz) two-way radio frequencies.

[0068] The inventive warehousing system **100** may also include an antenna (e.g., antennas) (not shown) to facilitate communication between the controller **130** and the module **120**. The antenna may include one or more antenna loops (e.g., wire loops) and communication may be limited to the area within a loop. These antenna loops can be placed in the floor, behind a shelf or in the ceiling.

[0069] Thus, when a given loop is activated, it can poll for a specific module **120** and if the module **120** is present, it can be made to respond to the poll. In other words the controller **110** (e.g., a software system operated by the controller **130**) can direct a search of the entire warehouse, loop by loop polling for a specific module **110**, and locate the presence or absence of a module **120**. When the software system establishes communication, the inventive warehousing system **100** can bcause the module's display device **123** to display a particular number, read whether a particular button **124** has been pushed or not, turn an LED **122** (e.g., red, green, etc.) on or off, read back the identification number of the module **120**, read the contents of the memory device **121**, etc.

[0070] As shown in **FIG. 4A**, the inventive warehousing system **100** may also include a smart bag **310** for receiving items from the container **110**. Generally, the features described above for the container **110** can also be provided by the smart bag **310**. For example, the smart bag **310** may be made of conventional materials, such as plastic or canvas.

[0071] Further, as shown in **FIG. 4B**, the smart bag **310** may also be associated with an electronic module **320** similar to the module **110** discussed above. For instance, the module **320** may include a memory device **321** (e.g., semiconductor memory; random access memory (RAM) for storing a unique identification (ID) number, two light emitting devices **322** (e.g., light emitting diodes (LEDs)) which may have different colors (e.g., red and green), a display device **323** (e.g., liquid crystal display (LCD)) which may include a five-digit display, and at least one device **324** (e.g., button) for activating/deactivating a feature of the module **320** (e.g., the LED, display device, etc.).

[0072] Further, the module **320** may be affixed to the smart bag **310**. For instance, the smart bag **300** may include a pocket **330** on the front of the bag **310** for containing the module **320**. Further, the smart bag **310** may also contain an optional second bag (not shown) that can be used to hold products for delivery.

[0073] The inventive warehousing system **100** provides a fast and efficient tool for picking and putting away items and may be used in virtually any setting (e.g., retail, warehouse, hybrid retail/warehouse, etc.). For instance, **FIGS. 5A and 5B** illustrate examples of how the inventive warehousing system **100** may be implemented according to the present invention.

[0074] As shown in **FIG. 5A**, items may arrive at the facility (e.g., a warehouse) on pallets. As soon as the items are identified (from bar codes or the invoice), it may be moved to a "pallet to container put area"**410** (e.g., staging area). The number of containers **110** required to hold all of the product from the pallet may be calculated by the controller **130** (e.g., the system software), and the required number of containers **110** may be transferred into the put area **410** automatically.

[0075] A database (e.g., controller database) links the unique identification number of each container **110** with the item and the number of items that should be placed in the container **110**. The pallet may be manually unpacked item by item and placed in the containers **110**. Each container **110** may be weighed as a cross-check that the number of items are correctly packed into the container **110**.

[0076] Referring again to **FIG. 5A**, the packed containers **100** may be moved into the shelf storage area **420** using, for example, a conveyor or truck. Each container **110** may be placed on the shelf in whatever order and in any available place the worker might find empty. For example, the containers **100** may be placed randomly on shelves. Further, the shelves may contain many thousands of containers **100** on shelves.

[0077] The controller **130** may communicate with a module **120** on a particular container **110** to indicate that an item contained in that particular container **110** is to be transferred. For instance, the controller **130** may cause the module **120** to activate an LED **122** which can be seen by operator to indicate that an item is to be transferred from that particular container **110**. (It should be noted that the module **120** may include an audible signal (e.g., bell) instead of the LED **122** as an indicating device).

[0078] The container **110** indicated by the controller **130** may be transferred (e.g., by an operator or automatically) from the shelf storage area **420** to a container to bag pick area **430**. Here, the item may be transferred from the container **110**, for example, for delivery to a purchaser. For example, the item may be transferred from the container **110** to a smart bag **310**. The smart bag **310** containing the item may be transferred from the container to bag pick area **430** to a bag to truck put area **440** to await transfer out of the facility.

[0079] Specifically, **FIG. 5B** provides a detailed illustration of a container to bag pick area **430**. As shown in **FIG. 4B**, the picking area **430** may include a conveyor lane **436** and a picking lane **437**.

[0080] When an operator (e.g., a "shelf picker") sees a light flashing on a container **110** in the shelf storage area **420**, he may remove the container **110** from the shelf and place it in a conveyor lane **436** (e.g., conveyor belt) that takes it to a picking area **430**. As the container **110** moves to the picking area **430**, the red LED is turned off. The container **110** arrives at the picking area **430** and goes past several picking regions **431** until it comes to the region that has a bag **310** assigned to the order.

[0081] When that particular container **110** reaches that region **431**, the controller **130** (e.g., software) causes the red light on the module **120** on that particular container **110** to activate again. The "packing picker" sees the light flashing an removes the item from the container **110**.

[0082] The operator may scan the item removed from the container **110** using a scanner **435** provided in the picking area **430**. The controller **130** (e.g., software system) detects that the correct item has been scanned and turns off the container's LED.

[0083] The operator may transfer the item to the picking lane **437** where smart bags **310** may be assembled. The controller **130** may (e.g., simultaneously with deactivating the container LED) activate an LED on a smart bag **310** in the picking lane **437** that is supposed to receive the item. The packing picker may place the item in the bag **310** that is flashing.

[0084] The picking area **430** may also contain a weight detection device (not shown) which allows the smart bag **310** to be weighed so as to detect a change in the weight of the smart bag **310** when an item is placed in the smart bag **310**. For instance, when a predetermined weight change is detected, the LED on that particular smart bag **310** may be deactivated (e.g., by the weighing device or by the controller **130** which communicates with the weighing device).

[0085] After the item has been removed from the container **110**, the container **110** may continue on the conveyor belt and eventually return to the shelf storage area **420**. As the container **110** moves towards the shelf storage area **420** the controller **130** may activate an LED on the container module **120** (e.g., the green LED) to indicate that the container **110** should be placed back on the shelf. When the shelf picker may see the green flashing light on the container **110** and remove the container **110** from the conveyor and place it back on the shelf (e.g., in a random order).

[0086] Thus, for example, the shelf picker may simply pick red light containers and place them on the conveyor towards the picking area, and green flashing containers and put them back on the shelves. Therefore, the packing pickers may, for example, work within their region in the packing area **430** and simply take items from a red flashing container in the conveyor lane **436**, scan it and place it in the bag **310** that has a flashing light in the picking lane **437**. A container **110**, the items in which have not been picked, may simply stay on the conveyor belt to return to the picking regions **431**. It may also be possible to keep high volume items (e.g., items that are frequently picked) on a special conveyor behind the pick lane **437** so that they may be easily moved to the pick lane.

[0087] Hybrid Retail/Warehouse Facility

[0088] The inventive warehousing system and method may be efficiently and effectively incorporated, for example, in a hybrid retail/warehouse system.

[0089] As shown in **FIG. 6**, an inventive hybrid retail/warehouse system **600** includes a retail/warehouse facility **605** for storing items (e.g., items of merchandise). The retail/warehouse facility **605** may store items which may be either personally selected by in-store customers and/or remotely selected by out-of-store customers. For example, the retail/warehouse facility **605** may be designed to handle both retail customers who are shopping in person and personally taking items from the shelves for purchasing. However, the facility **605** may also be designed to handle customers that are remotely purchasing items such as over the Internet (e.g., the World Wide Web). Thus, the facility **605** may be equipped to conveniently take orders over the Internet.

[0090] The inventive hybrid retail/warehouse system **600** also includes a container **610** associated with the retail/warehouse facility **605** for storing at least one item, an electronic module **620** (e.g., a radio frequency identification (RFID) module) associated with the container **610**, and a controller **630** which wirelessly communicates with the module **620**, for directing a transfer an item to and from the container **610**.

[0091] Specifically, the container **610**, electronic module **620** and controller **630** may have features comparable to those discussed above with respect to the container **110**, electronic module **120** and controller **130** in the warehousing system **100** above. In addition, the operation of the inventive hybrid retail/warehouse system **600** is comparable to the operation of the warehousing system **100** explained above with respect to **FIGS. 5A-5B**.

[0092] In short, the inventive system **600** provides a highly efficient, low capital cost solution that also can be easily scaled with throughput growth at low costs. The cost-effective scalability feature makes the inventive system **600** an attractive component in the Corporate Network product. Further, the inventive system **600** is ideally suited to serve uncertain inventory requirements. The system **600** can serve the full range and be quickly retrofitted at a low cost to increase productivity or be used as a simple pick-to-light in aisle system.

[0093] In other words, the inventive system **600** provides an inventive "new economy" fulfillment channel, that can save as much as 50% in regional fulfillment costs. The inventive channel may be based, for example, on optimized un-attended night-time delivery to a network of proprietary, secure drop boxes.

[0094] The inventive system **600** may be used, for example, for business-to-business (B2B) corporate fulfillment (e.g., critical parts, industry specific networks, wholesale fulfillment, and private corporate networks). However, the inventors believe retail fulfillment also offers a significant opportunity and can also benefit from the inventive system **600** and its related technology.

[0095] Unlike conventional systems, the inventive hybrid retail/warehouse system **600** provides optimized high throughput for each picking. The inventive system **600** relies in part on the electronic module **620** associated with the container **610**. However, unlike many radio frequency (RF) tag devices in conventional systems (and comparable to the features discussed above with respect to module **120**) the module **620** may include: two LEDs, an 8 Digit LCD, three operating switches (e.g., activating/deactivating buttons), a two way 300 Khz 1200 baud RF link, programmable functionality, and a prepro-grammed unique identification (e.g., ID number). Further, each module **620** may be used to display retail price and unit price, in addition to displaying all other warehouse functions on demand for in-store pickers, including pick-to-light LEDs.

[0096] Referring again to **FIG. 6**, the controller **630** wirelessly communicates with the RFID module **620**, in order to identify and locate items. It should be noted that **FIG. 6** is merely illustrative and that the controller **630** may be located within or outside the facility **605**. Likewise, the RFID module may be located either inside or outside the facility **605** and still be controlled by the controller **630**.

[0097] The inventive system **600** provides a low-cost, small-footprint pick-to-light fulfillment system that can use the controller **630** to "find" an item in a warehouse (e.g., a hybrid retail/warehouse facility **605**). Using a unique Radio Frequency Identification (RFID) module, the controller **630** allows random, dynamic placement of inventory for either pick or put-away. The controller **630** can "find" and recognize the location of any randomly placed inventory with periodic scans of the warehouse.

[0098] In addition, inventive system **600** is very flexible. Its installation can be configured to as low as 2,000 containers or modules, yet there is no practical limit on the size of facility or number of SKUs.

[0099] The inventive system **600** further provides a wireless, real-time fulfillment system using pick-to-light (PTL) and RFID technology which may be coupled with a proprietary inventory location and positioning software which may be executed, for example, by the controller **630**. The controller **630** allows for the identification and placement of inventory anywhere in the warehouse without the rigid structures of predetermined inventory locations or addresses.

[0100] Further, the proprietary wireless display module **620** is designed so as to allow the central controller **630** to selectively "talk" to the module **620** when it is located anywhere in or around the warehouse facility **605**. In addition, the modules **620** can be attached to any inventory unit (e.g., each/container/tote/pallet, etc.). Once an SKU is identified to the module **620**, an item may be placed anywhere in or around the facility **605** and the controller **630** will "locate" it.

[0101] Further, the inventive system **600** is configurable to any warehouse operation. Its basic functionality may include, for example, receiving, dynamic or traditional addressed put-away, dynamic picking, packing, shipping, cross docking, productivity measurement, labor management, dynamic slotting, re-warehousing (storage consolidation), RF communications for all functions, automatic replenishment, expiration dating, batch/lot control, report generation, order management, wave management, weight check, cycle counting.

COMPARATIVE EXAMPLES

[0102] **FIG. 7A** illustrates a conventional warehouse system, and **FIG. 7B** illustrates a comparably-sized warehouse utilizing the inventive hybrid retail/warehouse system **600**.

[0103] Specifically, **FIG. 7A** illustrates a conventional warehouse which may include, for example, a typical 250,000 sq.ft. distribution center (500'×500') in which all SKUs have location addresses assigned to them, either random or fixed. All locations within the facility are active, picking can occur throughout the facility. It is assumed that 20 pickers are required to pick 200 orders for this hypothetical operation.

[0104] Traditional pick-paths can span the entire warehouse to find the "B" and "C" items in a pick list.

[0105] It may be assumed, for example, that within such a conventional distribution operation, 75% of a picker's time will be spent traveling, and an average multi-pick order will require the picker to travel 60% of the total aisle distance within the picking area. In this case there are 7 aisles, 300 feet each; at 60% average order batch travel will be 1,260 feet and 200 batches will require travel of 252,000 feet per day (7 aisles×300 feet×60%×200 order batches). Assuming 20 pickers are required to fulfill, the average picker travel will be 12,600 feet per day. Therefore the standard output per picker is 12,600 feet per day.

[0106] **FIG. 7B**, on the other hand, illustrates a warehouse utilizing the inventive system **600** and which includes a Dynamic Pick Area A B C D F G. The inventive system **600** allows a much smaller pick area. In addition, a limited number of people locate the "B" and "C" containers and position them within the picking area.

[0107] Specifically, **FIG. 7B** illustrates a distribution center with 25,000 sq.ft. picking area, with 825 feet of aisles (11 aisles×75 feet) and 225,000 sq.ft. for back stock. This methodology may require two (2) full-time replenishers. However, since the picking area is geographically smaller and travel distances are shorter, there will be fewer pickers required. Using the math from the first illustration: 200 order batches×(825×60%)/12,600 feet/day/picker (performance standard)=8 pickers required. 8 pickers+2 replenishers=10 total headcount for a 10 headcount reduction. Paybacks of less than one year can be attained using the presently disclosed inventive system **600**.

[0108] Referring again to the drawings, **FIG. 7C** illustrates a conventional warehouse system, and **FIG. 7D** illustrates a comparably-sized warehouse utilizing the inventive hybrid retail/warehouse system **600**.

[0109] **FIG. 7C** illustrates second example of a conventional warehouse system A B C D E F G Y. As shown here, conventional pick-paths can span the entire warehouse to find the "B" and "C" items in a pick list.

[0110] Specifically, **FIG. 7C** illustrates a typical 250,000 sq.ft. distribution center (500'×5800') in which all SKUs have location addresses assigned to them, either random or fixed. All locations within the facility are active, picking can occur throughout the facility.

[0111] It may be assumed, for example, that 20 pickers are required to pick 200 orders for this hypothetical operation. It may also be assumed that, within distribution operations, 75% of a picker's time will be spent traveling, and an average multi-pick order will require the picker to travel 60% of the total aisle distance within the picking area.

[0112] In this case there are 7 aisles, 300 feet each; at 60% average order batch travel will be 1,260 feet and 200 batches will require travel of 252,000 feet per day (7 aisles×300 feet×60%×**200** order batches). Assuming 20 pickers are required to fulfill, the average picker travel will be 12,600 feet per day. Therefore the standard output per picker is 12,600 feet per day.

[0113] **FIG. 7D**, on the other hand, illustrates a facility using the inventive system **100** as applied to a picking operation. As shown in **FIG. 7D**, the inventive system **600** allows a much smaller pick area. A limited number of people locate the "B" and "C" containers and position them within the picking area (e.g., dynamic pick area A B C D E F.

[0114] Specifically, **FIG. 7D** illustrates the a distribution center with 25,000 sq.ft. picking area, with 825 feet of aisles (11 aisles×75 feet) and 225,000 sq.ft. for back stock. This methodology will require two (2) full-time replenishers, however since the picking area is geographically smaller and travel distances are shorter, there will be fewer pickers required. Using the math from the first illustration: 200 order batches×(825×60%)/12,600 feet/day/picker (performance standard)=8 pickers required. 8 pickers+2 replenishers=10 total headcount for a 10 headcount reduction. Paybacks of less than one year can be attained using the inventive system **600**.

[0115] This example, assumes, for instance, that each headcount=$15.00 US/hr including fringes, and that each headcount=2080 hours/year (no overtime). It also assumes a 250,000 sq.ft. warehouse cost at $4.00 US per sq.ft. $1,000, 000 US inventory.

[0116] Therefore, the cost of the inventive system **600** may include installation w/20,000 containers $250,000, employee retraining 8 hrs H 20 HC 2,400, maintenance agreement (15%) 37,500, and contingency (10%) 25,000. Thus, the total cost is about $314,900.

[0117] In other words, the inventive system **600** results in savings over the conventional system. For instance, assuming a 10 headcount reduction (10 H $15 H 2080) $312,000, space utilization improvement 15% **50,000**, and inventory utilization improvement 5% 50,000, the total savings is about $362,000.

[0118] Other Features

[0119] An important feature of the inventive system **600** is that location of items does not need to be assigned. All movement whether put-away, re-stocking, receiving or shipping can be random and dynamic. The controller **630** will locate the SKU, container, or pallet and update the system **600**. All items within or around the facility **605** may be identified with modules **620** which are continuously interrogated by the controller **630** for quantity and physical location of the items.

[0120] This unique attribute is invaluable in fast paced, dynamic warehouse environments such as fashion, seasonal businesses, and service parts. The ability to dynamically slot picking areas allows the warehouse to keep a small picking footprint. The ability to dynamically consolidate put-away areas keeps those storage areas densified and opens empty slots for inbounds.

[0121] There are other important features of the inventive system **600** which make it more efficient than conventional systems. For example, the receipt process ties a single unit of product (each, container, pallet, etc) to a single module **620** which may be automatically tracked by the controller **630**. Further, Received product is simply put into the next available picking or storage slot anywhere in the warehouse (e.g., dynamic put-away). The controller **630** takes care of the tracking. This user-friendly approach allows operators more freedom to manage the flow of inbound inventory.

[0122] In addition, the system **600** provides for dynamic picking. For instance, occasionally, a "B" item becomes an "A for a day" and these items can be moved forward in real-time by the pickers, while slower moving items "B for a day" can be moved back using the same methodology. The system **600** also provides for cross-docking. For instance, during the receiving process, the controller **630** will automatically identify product to be cross docked and will notify receiving personnel through the display on the module **620**. The product is then directed to the appropriate packing or shipping area. The system **600** also helps to facilitate productivity measurement. That is, the controller **630** may contain productivity reporting capabilities and interface with all conventional warehouse productivity software.

[0123] The system **600** also provides for dynamic slotting. For example, as the velocity of products change, the controller **630** may direct the movement of product to specific aisles or slots. Replenishers may be directed to move fast movers to the front of the picking area, slower movers back, and "C" items will be removed to storage if there is no future picking requirement. It should be noted that there is no requirement to return the "C" item to a fixed address, because it can be replaced anywhere in storage and the controller **630** will find it. The controller **630** updates the new location of the product automatically, and directs pickers or replenishers to the "new" location.

[0124] Further, the system **600** provides for pick path optimization. Specifically, pickers and replenishers may be directed through the most efficient pick paths to optimize productivity (e.g., a picking area may be minimized and a walking distance between a shelving (e.g., storage) area and a picking area may be minimized).

[0125] The system **600** also facilitates re-warehousing (storage consolidation). In other words, partially depleted containers may be moved to half-container locations to densify the storage area. Again the controller **630** may automatically update the new location of the product.

[0126] Further, wireless (e.g., radio frequency) communications may be used for all functions, thereby providing for automatic replenishment. In other words, since the controller dynamically tracks the location and quantity of all products

in the warehouse, replenishment signals may be triggered to keep the right product in the pick area, just in time.

[0127] The system **600** can be incorporated at receipt to so as to facilitate expiry dating. In other words, the controller **630** can be configured to "find" the oldest product to reduce expiry dating write-downs. The system **600** may also aide in batch/lot control. The system **600** is completely variable and operator controllable to assure that the right mix or match of products is sent to the right customer. Last in first out (LIFO), first in first out (FIFO), least costly first, most costly first, expired product flash, and more are available in the controller **630**.

[0128] The system **600** also facilitates cycle counting. In other words, the system **600** is configurable to meet the audit requirements of any company. Pickers may transmit (e.g., directly transmit) inventory discrepancies or replenishers to the controller **630** to trigger full scale cycle counts by SKU, container, expiration date, batch, etc.

[0129] In addition, the inventive system **600** is consistent and compatible with many current warehouse operations and systems. This is a significant benefit to organizations that have invested heavily in a traditional warehouse management system (WMS) and desire to add the module **620** and controller **630** functionality to their existing systems.

[0130] Economic Analysis

[0131] The inventors carried out preliminary economic analysis and marketing interviews and concluded that a retail store which utilizes the inventive hybrid retail/warehouse system **600** will overcome the major disadvantages of value chain issues and in-store picking of items. The store would effectively be able to sell "two touch" items at a retail level.

[0132] Additionally, such retail stores with the inventive system **600** will have low costs associated with item shelf maintenance, and provide the consumer with a neat orderly appearance. Such stores would also have very low planogram requirements, product maintenance inventory management costs, and the ability to modify and re-set store layout in a matter of only a few hours. Such a store would also have many inventory maintenance advantages, and the ability to optimize pricing to consumers.

[0133] In addition, such stores using the inventive system **600** may overcome one of the major consumer objections to bulk discount stores, namely "that it costs too much to shop because your forced to buy in large quantities". In other words, a store using the inventive system **600** will permit the store to sell individual items at discount bulk prices, for both in-store and out-of-store (e.g., internet/catalog) sales.

[0134] Advantages

[0135] The advantages of the inventive system **600** over a conventional shelf-based system with a traditional warehouse management system (WMS) are numerous. For example, the system **600** provides for captive customers, and strong customer conversion. Most in-store customers would make use of Internet and visa-versa. The system **600** also makes it possible to sell individual items in-store at prices competitive to discount bulk in competition. This is considered a consumer barrier to current bulk stores. In addition, the system **600** provides strong economic and value chain justification.

[0136] Further, the containers provide enormous savings in software and systems complexity, and product handling and space management efficiencies. Totes have a long history of success in Europe, where many manufactures are required to deliver all back-door products packed in containers. The containers can also provide a neat orderly looking store.

[0137] In addition, the system **600** provides electronic pricing and price optimization which is essentially free, and has stand-alone economic advantages. Further, the electronic management of item location or planogram has a low cost and is easy to implement. Moreover, store re-set can be carried out at much lower cost. In addition, the software systems and product inventory management software in the system **600** are not complex compared to conventional in-store systems.

[0138] In addition, the modules **620** are relatively inexpensive (e.g., less than $5.00 per module). Further, the software used to manage item picks and inventory that replaces current warehouse management system (WMS) software is simple. This is at least in part because the system **600** may be based on containers not SKUs. Moreover, physical location of the items can be managed and detected by the software in the warehouse, and items can be re-set based on whatever optimization might be required.

[0139] By flashing light-emitting devices (e.g., light-emitting diodes (LEDs)) on items to be picked, the pick rates may be doubled, put costs reduced, inventory management simplified, particularly with same SKUs that have different cost basis or expiration dates. Furthermore, physical inventory is simple, warehouse re-sets can be carried in matter of only few hours, and item location in warehouse can be optimized on almost a daily basis.

[0140] Conventional paper based operations can retain their existing warehouse storage philosophy and simply implement the inventive system **600** in a picking area. This is an excellent use of capital and the inventive system's capabilities. Improving picking productivity by 20-40% will justify the capital expenditure for the system **600**, due to the system's low investment. For instance, if a company employs 20 or more warehouse personnel, an improvement in performance of only 4-6 headcount will justify the cost of the system **600**. In addition, the system **600** is expandable and scalable, allowing warehouse operations to grow with their expanding businesses and markets.

[0141] Further, documentation and support of the controller **630** may include operations manuals, training documentation and support, installation manual, installation technical support, technical help desk, and full release and documentation of the controller **630** source code. Maintenance agreements in one (1) to five (5) year increments may also be available at 15% of installation annually, which will include all upgrades and modifications.

[0142] In short, the inventive system **600** provides fast paced quickly changing distribution operations the accuracy and efficiency of a conventional pick-to-light system without the high cost and static positions of hard-wired displays.

[0143] Further, the open code structure allows the inventive system **600** to easily interface with existing legacy business systems, enterprise resource planning systems (ERP) or existing inventory/warehouse management systems.

[0144] Specifically, the modules **620** may include a proprietary design. Briefly, though, each module **120** may contain a custom communication chip. A typical warehouse utilizing the inventive system **600** may include, for example, approximately ten (10) base stations for communication, a central controller, and approximately 20,000 containers for a total cost of under $250,000 installed. This is relatively inexpensive, compared to conventional WMS and PTL which cost approximately $100 to $250US per location.

[0145] Other benefits of the inventive system **600** may include: installation costs 50-75% below traditional WMS-based PTL systems, improved picker accuracy to 99%+, improved picker productivity of 20-40% compared to non PTL installations, Space reductions up to 25% due to more effective space utilization, dynamic ABC, dynamic storage consolidations, Inventory reductions due to improved accuracy, consolidation, real-time, and cross-dock capabilities, Operator accountability, Real-time transaction capture, Paperless warehouse environment, 24×7 customer service/help desk, and Installation support.

[0146] Referring to **FIG. 8**, another aspect of the present invention includes an inventive warehousing method **800**. As shown in **FIG. 8**, the inventive method includes storing **(810)** at least one item in a first container, and remotely directing **(820)** a transfer of the item(s) to and from the first container, using a Radio Frequency Identification Device which is associated with the first container.

[0147] In addition, **FIG. 9** is a flowchart an inventive hybrid retail/warehouse method **900**. As shown in **FIG. 9**, the inventive method **900** includes storing **(910)** at least one item in a first container which is associated with a retail/warehouse facility, and remotely directing **(920)** a transfer of the item(s) to and from the first container, using a Radio Frequency Identification Device which is associated with the first container.

[0148] Referring again to the drawings, **FIG. 10**, illustrates a typical hardware configuration which may be used for implementing the inventive system **100**, **600** and method **800**, **900**. The configuration has preferably at least one processor or central processing unit (CPU) **1011**. The CPUs **1011** are interconnected via a system bus **1012** to a random access memory (RAM) **1014**, read-only memory (ROM) **1016**, input/output (I/O) adapter **1018** (for connecting peripheral devices such as disk units **1021** and tape drives **1040** to the bus **1012**), user interface adapter **1022** (for connecting a keyboard **1024**, mouse **1026**, speaker **1028**, microphone **1032**, and/or other user interface device to the bus **1012**), a communication adapter **1034** for connecting an information handling system to a data processing network, the Internet, and Intranet, a personal area network (PAN), etc., and a display adapter **1036** for connecting the bus **1012** to a display device **1038** and/or printer **1039**. Further, an automated reader/scanner **1041** may be included. Such readers/scanners are commercially available from many sources.

[0149] In addition to the system described above, a different aspect of the invention includes a computer-implemented method for performing the above method. As an example, this method may be implemented in the particular environment discussed above.

[0150] Such a method may be implemented, for example, by operating a computer, as embodied by a digital data processing apparatus, to execute a sequence of machine-readable instructions. These instructions may reside in various types of signal-bearing media.

[0151] Thus, this aspect of the present invention is directed to a programmed product, including signal-bearing media tangibly embodying a program of machine-readable instructions executable by a digital data processor to perform the above method.

[0152] Such a method may be implemented, for example, by operating the CPU **1011** to execute a sequence of machine-readable instructions. These instructions may reside in various types of signal bearing media.

[0153] Thus, this aspect of the present invention is directed to a programmed product, comprising signal-bearing media tangibly embodying a program of machine-readable instructions executable by a digital data processor incorporating the CPU **1011** and hardware above, to perform the method of the invention.

[0154] This signal-bearing media may include, for example, a RAM contained within the CPU **1011**, as represented by the fast-access storage for example. Alternatively, the instructions may be contained in another signal-bearing media, such as a magnetic data storage diskette **1100** **(FIG. 11)**, directly or indirectly accessible by the CPU **1011**.

[0155] Whether contained in the computer server/CPU **1011**, or elsewhere, the instructions may be stored on a variety of machine-readable data storage media, such as DASD storage (e.g, a conventional "hard drive" or a RAID array), magnetic tape, electronic read-only memory (e.g., ROM, EPROM, or EEPROM), an optical storage device (e.g., CD-ROM, WORM, DVD, digital optical tape, etc.), paper "punch" cards, or other suitable signal-bearing media including transmission media such as digital and analog and communication links and wireless. In an illustrative embodiment of the invention, the machine-readable instructions may comprise software object code, complied from a language such as "C," etc.

[0156] Further, it should be noted that the electronic tag may be considered to be associated not only with the container which contains items, but also with the item or items stored by (e.g., housed in) the container. For example, where the container includes a single item, the electronic tag (e.g., electronic module) which is affixed to (e.g., integrally formed with) the container may likewise be considered to be associated with the item stored in (e.g., housed by) the container.

[0157] Thus, information (e.g., an expiry date) associated with the item or items may be stored by the memory device included in the electronic module affixed to the container which houses the item or items.

[0158] Further, **FIG. 12** illustrates the details of an electronic module which may be associated with a container or multiple items, or a single item (e.g., where a single item is included in the container) in the inventive system **100**. As illustrated in **FIG. 12**, the electronic tag **1210** associated with the item may be affixed to a container or containers. As noted above, the container may include, for example, a tote, package, packet, wrapper, envelope, pouch, crate, pallet, bin, cylinder, box, carton, bag, can, etc. and may contain (e.g., store, house, etc.) a single item.

[0159] Further, the small electronic tag **1210** (e.g., electronic module) may be integrally formed with (e.g., embedded in a wall of) the container or may be affixed (e.g., adhered to) the container, for example, by locating the module, in a small translucent pocket on the container. The tag may include a signaling device (e.g., a plurality of signaling devices) such as a colored (e.g., red or green) light emitting device **1220** (e.g., a light emitting diode (LED) or an audible signaling device. The electronic tag **1210** may also include a liquid crystal display **1230** (LCD) for numeric or alphanumeric display, and a switch (e.g., plurality of switches or buttons) **340** for controlling an operation of the electronic tag **1210**.

[0160] **FIG. 12** provides a more detailed description of the electronic tag **1210**. As shown in **FIG. 12**, the electronic tag **1210** additionally may include an inexpensive processor **1225** (e.g., a low powered four bit microprocessor), a memory device **1235** (e.g., a random access memory (RAM)) or other nonvolatile memory device for storing a unique identification number. The identification number may be permanent, so that it can be changed only with a special program and transmitter.

[0161] The electronic tag **1210** may also contain a transceiver **1250** (e.g., a transmitter/receiver such as a two-way communication chip) for allowing the electronic tag **1210** to communicate with a base station (e.g., controller). The two-way communications chip may be, for example, a lowcost CMOS analog digital chip. The chip may be connected to one or more orthogonal ferrite antennas **1260** that are able to transmit and receive signals using low frequencies (e.g., radio frequencies such as about 128 kHz) to a loop antenna which may be wirelessly connected to a base station (e.g., controller).

[0162] For example, antenna **1260** may be small or large relative to the size of the container. Specifically, the antenna **1260** may be large and may be formed on at least one side of the container.

[0163] Further, the electronic module **1210** may be integrally formed with the container. That is, the entire body of the container may be available for including features of the electronic module **1210**. For example, if the container is a plastic package having 6 sides (e.g., a tetrahedron-shaped package) the antenna may be integrally formed (e.g., embedded in) on one or more of the six sides of the package.

[0164] For example, the container may include a body which contains the item, and an electronic module integrally formed with (e.g., embedded in) the body. In this case, the body may include an antenna coupled to the electronic module for facilitating wireless communication with the electronic module. For example, the body may include a plurality of sides, the antenna being integrally formed with at least one of the plurality of sides. Specifically, the antenna may be integrally formed with all of the plurality of sides.

[0165] Further, the loop antenna (e.g., antennas) may be located in the warehouse in order to facilitate a two-way communication between the electronic tag(s) **1210** and the base station (e.g., controller). Specifically, the electronic tag **1210** may wirelessly communicate with the base station via a bi-directional wireless link. The wireless link may include, for example, a low frequency conductive loop requiring minimal power and allowing communication within a small area.

[0166] Further, the LCD **1230** may be programmed to display both numeric as well as alphanumeric information transmitted to the electronic tag (e.g., electronic module) via the base station. The circuitry may be solar powered or powered, for example, by a battery **1270** or other power source. Battery life using conventional alkaline batteries is likely to exceed five years, and with AAA batteries the life may be longer.

[0167] In the present invention, the container which contains an item (e.g., items) may be transferred to an area where the item can be sorted and stored (e.g., on shelves) in the warehouse. The location of the items (e.g., items in containers) can be random or predetermined. For example, the electronic tag **1210** may be used to help direct the placement of items at predetermined locations (e.g., on shelves) in the warehouse. For example, an item's proper location in the warehouse may be displayed on the LCD **1230** so that it may be easily viewed, for example, by handlers (e.g., picker/packers) at a distribution center. For instance, the items may be sorted and shelved in the warehouse, for example, by an expiry date.

[0168] For example, the items can be placed on shelves from left to right, front to back, upper to lower or lower to upper or in any other order, according to such factors as the expiry date of the item.

[0169] In addition, using the loop antenna, the base station (e.g., controller) may poll all of the electronic tags **1210** in the inventive system in search of a particular electronic tag **1210** and communicate only with that particular tag. For instance, the base station may poll each of the electronic tags **1210** located near (e.g., within) a loop antenna at a particular location (e.g., on a particular shelf) in the warehouse. Thus, the base station is capable of placing specific information on the display **1230**, activating/deactivating the signaling device (e.g., flashing the light emitting diodes **1220**), selectively activating each electronic tag **1210** associated with an item (e.g., an electronic tag **1210** affixed to a container which contains item).

[0170] For example, the item (e.g., containers of items) may be loaded onto shelves at the warehouse (e.g., distribution center). The loop antenna may, for example, be wired around the back and/or top of the shelf holding the items (e.g., containers). The loop antenna is wirelessly connected to the base station (e.g., controller) which can transmit and receive to all electronic tags **1210** located in the loop (e.g., located on a particular shelf).

[0171] Each electronic tag **1210** may have a unique identification number. The base station **120** may poll all of the electronic tags **1210** in the loop (e.g., in the transport vehicle) for a specific identification number, and then communicate only to that specific electronic tag. For example, the base station may place specific information on the display of the electronic tag, activate or deactivate the signaling device (e.g., LED) while selectively polling each electronic tag.

[0172] **FIG. 13** illustrate another aspect of the present invention which is similar to the aspects described above and, thus, the above descriptions of the various aspects of the present invention are incorporated by reference herein.

[0173] Specifically, as illustrated in **FIG. 13**, the present invention includes an item **1305** to be warehoused. The item

1305 includes an electronic module **1310** (e.g., RFID module described above) associated with the item for wirelessly communicating with a controller which controls a warehousing of the item **1305**.

[**0174**] The present invention further includes a system **1300** for warehousing the item **1305**. The system **1300** includes the electronic module **1310** associated with the item **1305**, and a controller **1320** which wirelessly communicates with the electronic module **1310**, for controlling a warehousing of the item **1305**.

[**0175**] For example, the controller **1320** may control a warehousing of the item **1305** by controlling at least one of a location of the item and a movement of the item.

[**0176**] Further, the electronic module may be one of affixed to (e.g., by adhesive, staple, fastener, clip, screw, rivet, etc.) the item and integrally formed with the item. Thus, for example, where the item is a plastic device, the electronic module **1310** may be integrally formed with (e.g., embedded in) the plastic item. Further, the electronic module **1310** may be formed in (e.g., integrally formed in) an adhesive label which can be adhered to the item **1305**.

[**0177**] With its unique and novel features, the present invention optimizes each employee's time and leads to highly efficient put away of products and highly efficient picking of products. The invention, therefore, offers affordable, state-of-the-art technology for managing and improving retail and warehouse operations. The inventive system and method may also be conveniently offered as an independent or integrated solution to supply chain needs.

[**0178**] While the invention has been described in terms of several preferred embodiments, those skilled in the art will recognize that the invention can be practiced with modification within the spirit and scope of the appended claims. For example, while a scenario has been discussed with various colored lights, obviously different colored lights could be used, as well as different formats for the lights (e.g., pulsing, flashing, etc.).

What is claimed is:

1. A warehousing system comprising:

a first container for storing at least one item,

a first electronic module associated with said first container; and

a controller which wirelessly communicates with said first electronic module, for directing a transfer of said at least one item to and from said first container.

2. The warehousing system according to claim 1, further comprising:

a second container for receiving said at least one item from said first container,

wherein said controller directs a transfer of said at least one item from said first container to said second container.

3. The warehousing system according to claim 2, wherein said second container is associated with a second electronic module which wirelessly communicates with said controller, for facilitating a transfer of said at least one item from said first container to said second container.

4. The warehousing system according to claim 1, wherein said first electronic module comprises a light emitting device which is activated to indicate that said at least one item should be transferred to and from said first container.

5. The warehousing system according to claim 1, wherein said first electronic module comprises a display device for indicating a content of said first container.

6. The warehousing system according to claim 1, wherein said first container comprises a plastic tote.

7. A hybrid retail/warehouse system comprising:

a retail/warehouse facility comprising a shelving area and a picking area adjacent to said shelving area, and having a layout so as to minimize a picking area and a walking distance between a picking area and a shelving area;

a container associated with said retail/warehouse facility for storing at least one item,

an electronic module associated with said container; and

a controller which wirelessly communicates with said module, for directing a transfer of said at least one item to and from said container,

8. The hybrid retail/warehouse system according to claim 7, wherein said item is personally selected by in-store customers and remotely selected by out-of-store customers.

9. The warehousing system according to claim 7, wherein said electronic module is affixed to said container.

10. A warehousing method comprising:

storing at least one item in a first container; and

remotely directing a transfer of said at least one item to and from said first container, using a first electronic module which is associated with said first container.

11. The warehousing method according to claim 10, further comprising:

remotely assigning a second container to receive said at least one item from said first container.

12. A hybrid retail/warehouse method comprising:

storing at least one item in a container which is associated with a retail/warehouse facility, said facility comprising a shelving area and a picking area adjacent to said shelving area, and having a layout so as to minimize a picking area and a walking distance between a picking area and a shelving area; and

remotely directing a transfer of said at least one item to and from said container, using an electronic module which is associated with said container.

13. The hybrid retail/warehouse method according to claim 12, wherein said item is at least one of personally selected by in-store customers and remotely selected by out-of-store customers.

14. The hybrid retail/warehouse method according to claim 12, wherein said electronic module is affixed to said container.

15. The hybrid retail/warehouse method according to claim 12 wherein said container comprises a plastic tote.

16. A signal-bearing media tangibly embodying a program of machine-readable instructions executable by a digital data processor to perform a warehousing method, said method comprising:

storing at least one item in a first container; and

remotely directing a transfer of said at least one item to and from said first container, using an electronic module which is associated with said first container.

17. A signal-bearing media tangibly embodying a program of machine-readable instructions executable by a digital data processor to perform a hybrid retail/warehouse method, said method comprising:

storing at least one item in a container which is associated with a retail/warehouse facility, said facility comprising a shelving area and a picking area adjacent to said shelving area, and having a layout so as to minimize a picking area and a walking distance between a picking area and a shelving area; and

remotely directing a transfer of said at least one item to and from said container, using an electronic module which is associated with said container.

18. The warehousing system according to claim 1, wherein said container comprises a pallet.

19. The warehousing system according to claim 1, wherein said container comprises a plastic package.

20. The warehousing system according to claim 1, wherein said container stores one item of merchandise.

21. The warehousing system according to claim 1, wherein said controller wirelessly communicates with said first electronic module via a low frequency signal.

22. A pallet for storing an item of merchandise, said pallet comprising:

a body which contains said item of merchandise; and

an electronic identification module attached to said body.

23. A package for storing an item of merchandise, said package comprising:

a body which contains said item of merchandise; and

an electronic identification module attached to said body.

24. The warehousing system according to claim 1, wherein said first electronic module comprises an antenna for facilitating said communication with said controller.

25. The warehousing system according to claim 1, wherein said first electronic module is integrally formed with said first container.

26. A container for containing an item, comprising:

a body which contains said item; and

an electronic module integrally formed with said body.

27. The container according to claim 23, wherein said body comprises an antenna coupled to said electronic module for facilitating wireless communication with said electronic module.

28. The container according to claim 24, wherein said body comprises a plurality of sides, said antenna being integrally formed with at least one of said plurality of sides.

29. The container according to claim 24, wherein said antenna is integrally formed with said plurality of sides.

30. A package for containing an item, comprising:

a body which contains said item; and

an electronic module integrally formed with said body.

31. A pallet for containing an item, comprising:

a body which contains said item; and

an electronic module integrally formed with said body.

32. The warehousing system according to claim 1, wherein said item comprises a medical device.

33. A system for warehousing an item, comprising:

an electronic module associated with said item; and

a controller which wirelessly communicates with said electronic module, for controlling a warehousing of said item.

34. The system of claim 33, wherein said controller controls a warehousing of said item by controlling at least one of a location of said item and a movement of said item.

35. An item to be warehoused, comprising:

an electronic module associated with said item for wirelessly communicating with a controller which controls a warehousing of said item.

36. The item of claim 35, wherein said electronic module is one of affixed to said item and integrally formed with said item.

* * * * *