United States Patent

Weber

[15] **3,702,618**

[45] **Nov. 14, 1972**

[54] COLLAPSIBLE UMBRELLA

[72] Inventor: **Heinz Weber**, Hilden, Germany

[73] Assignee: **Telesco Brophey Limited**, Montreal, Quebec, Canada

[22] Filed: **June 19, 1970**

[21] Appl. No.: **47,688**

[30] **Foreign Application Priority Data**

July 25, 1969 Germany.....P 19 37 892.8
July 25, 1969 Germany.....G 69 29 504.1
Oct. 25, 1969 Germany.....P 19 53 796.3

[52] **U.S. Cl.**.....**135/25 R**, 135/32
[51] **Int. Cl.**.....**A45b 19/00**
[58] **Field of Search**.....135/20, 25, 26, 27, 32, 29, 135/30, 31

[56] **References Cited**

UNITED STATES PATENTS

3,135,276 6/1964 Weber.....135/32 X

FOREIGN PATENTS OR APPLICATIONS

1,117,832 11/1961 Germany.....135/25 R
448,754 6/1936 Great Britain.....135/26
864,180 3/1965 Italy.....135/26

Primary Examiner—J. Karl Bell
Attorney—Alan Swabey

[57] **ABSTRACT**

The umbrella has a telescopic stick and the dome ribs are each of three telescopic sections and stretcher means to support the dome ribs, the stretcher means hingedly connected to the outer stretcher section and a geats saddled over the dome ribs and housing the hinge connection and being slidable on the dome rib.

6 Claims, 19 Drawing Figures

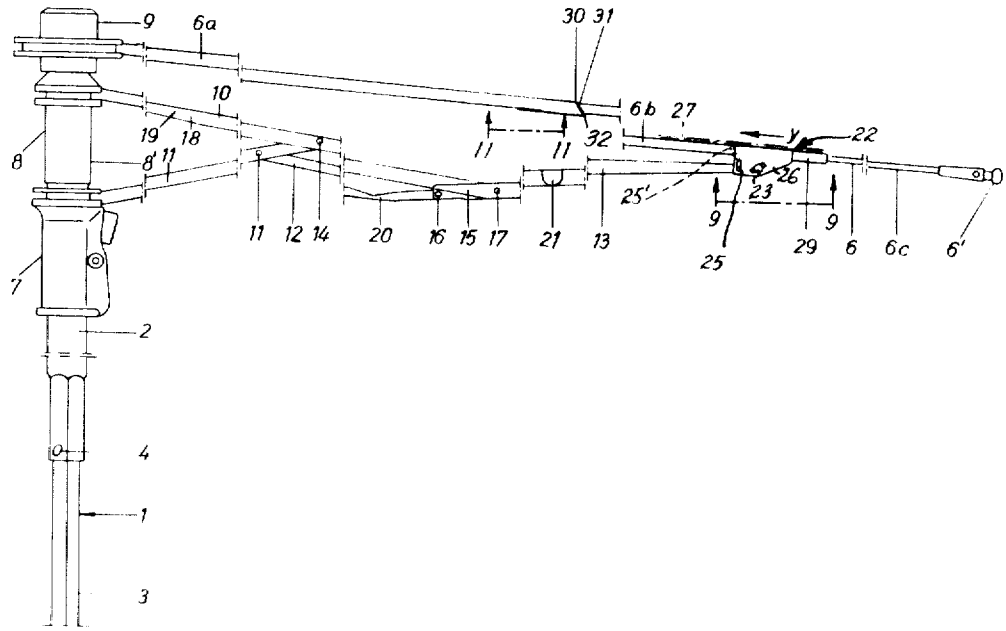

PATENTED NOV 14 1972

3,702,618

SHEET 1 OF 6

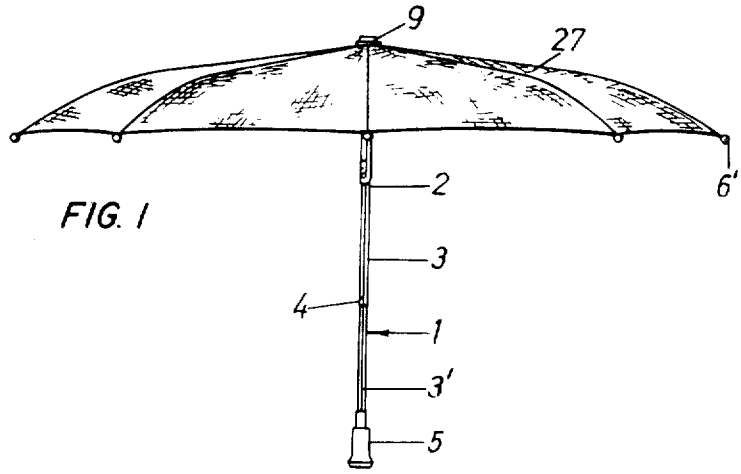

FIG. 1

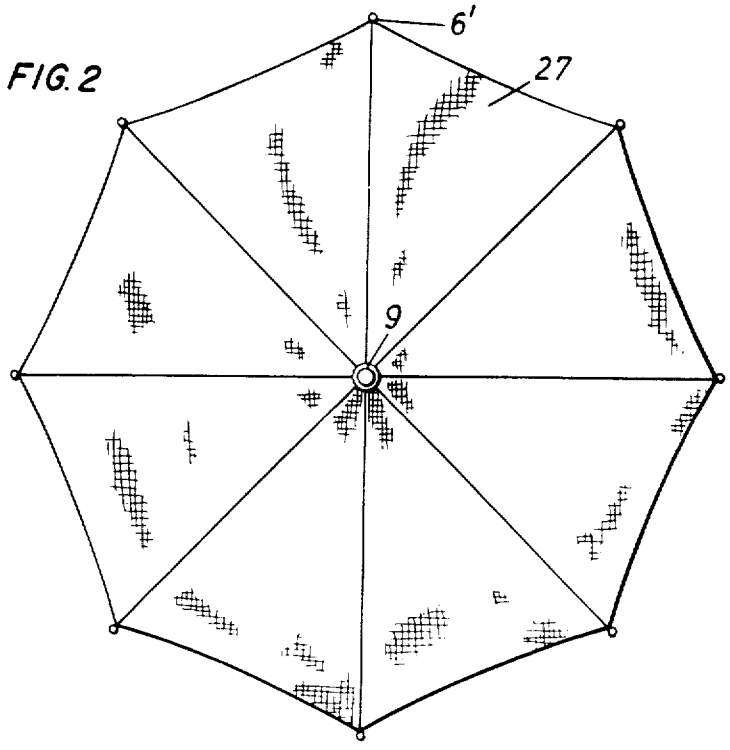

FIG. 2

INVENTOR
Heinz WEBER

ATTORNEY

FIG. 4

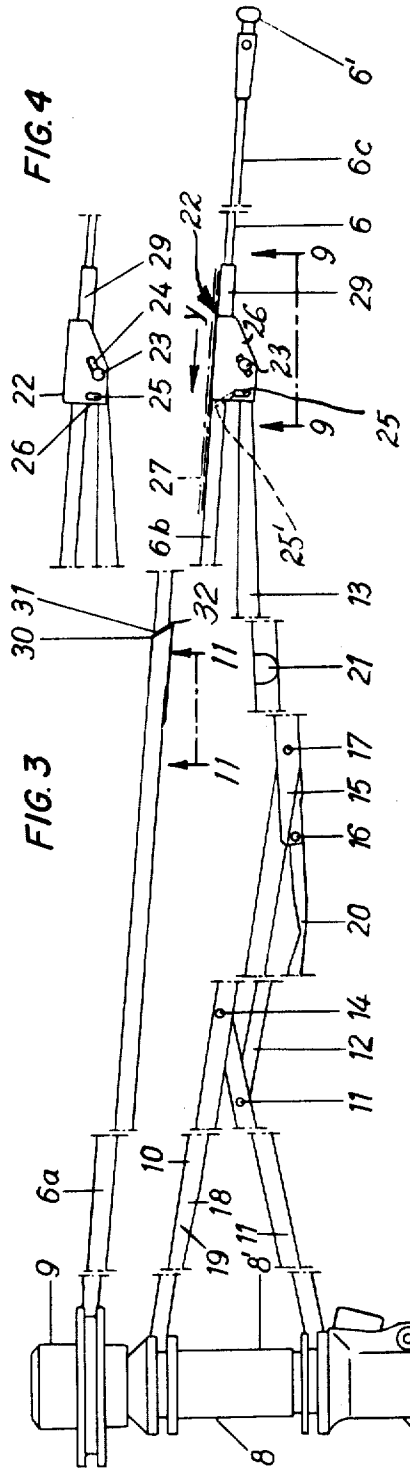

FIG. 6

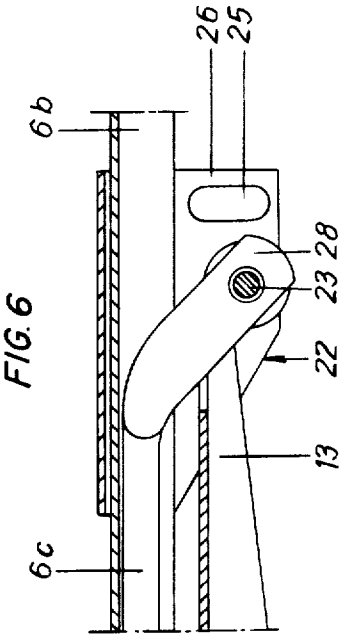

FIG. 3

INVENTOR
Heinz WEBER

Allan Sinsky
ATTORNEY

FIG. 5

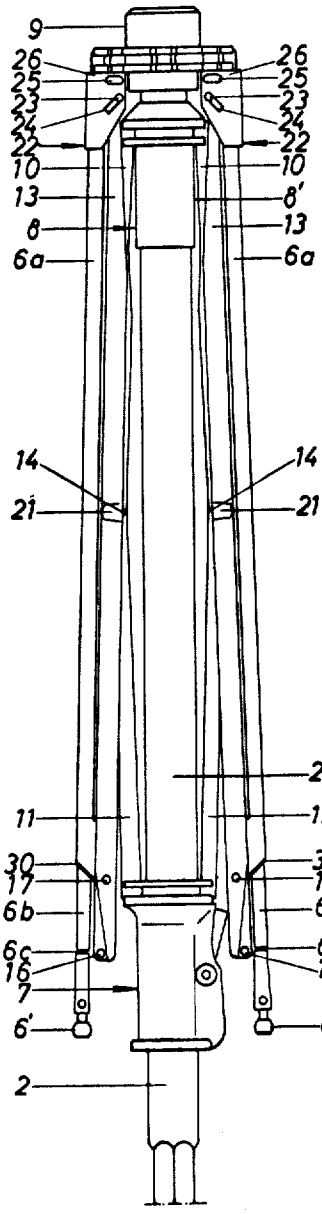

FIG. 7

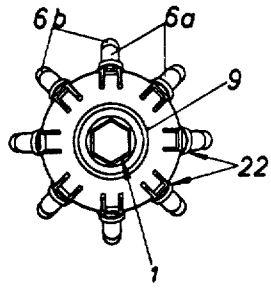

INVENTOR
Heinz WEBER

ATTORNEY

FIG. 12

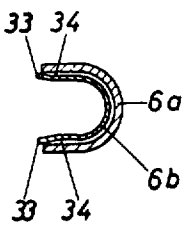

FIG. 11

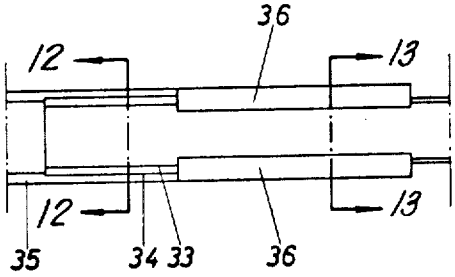

FIG. 13

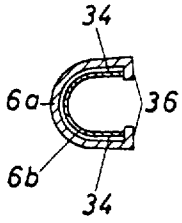

FIG. 8

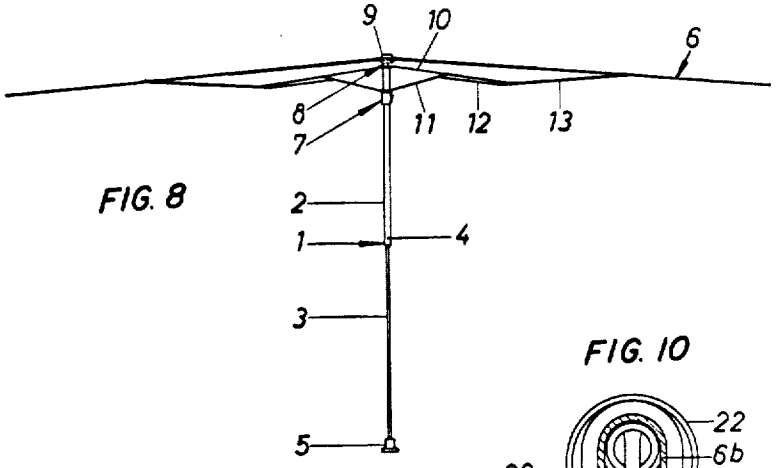

FIG. 10

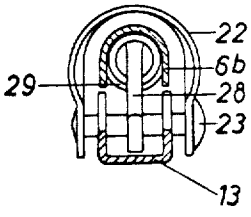

FIG. 9

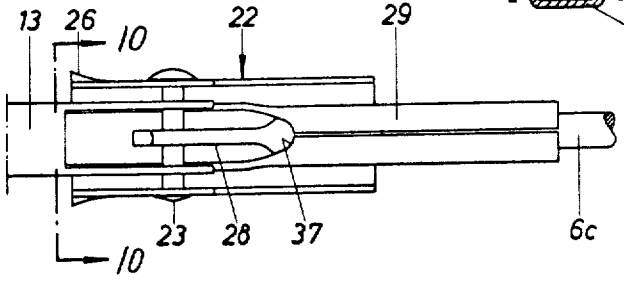

INVENTOR
Heinz WEBER

Allan Sinsley
ATTORNEY

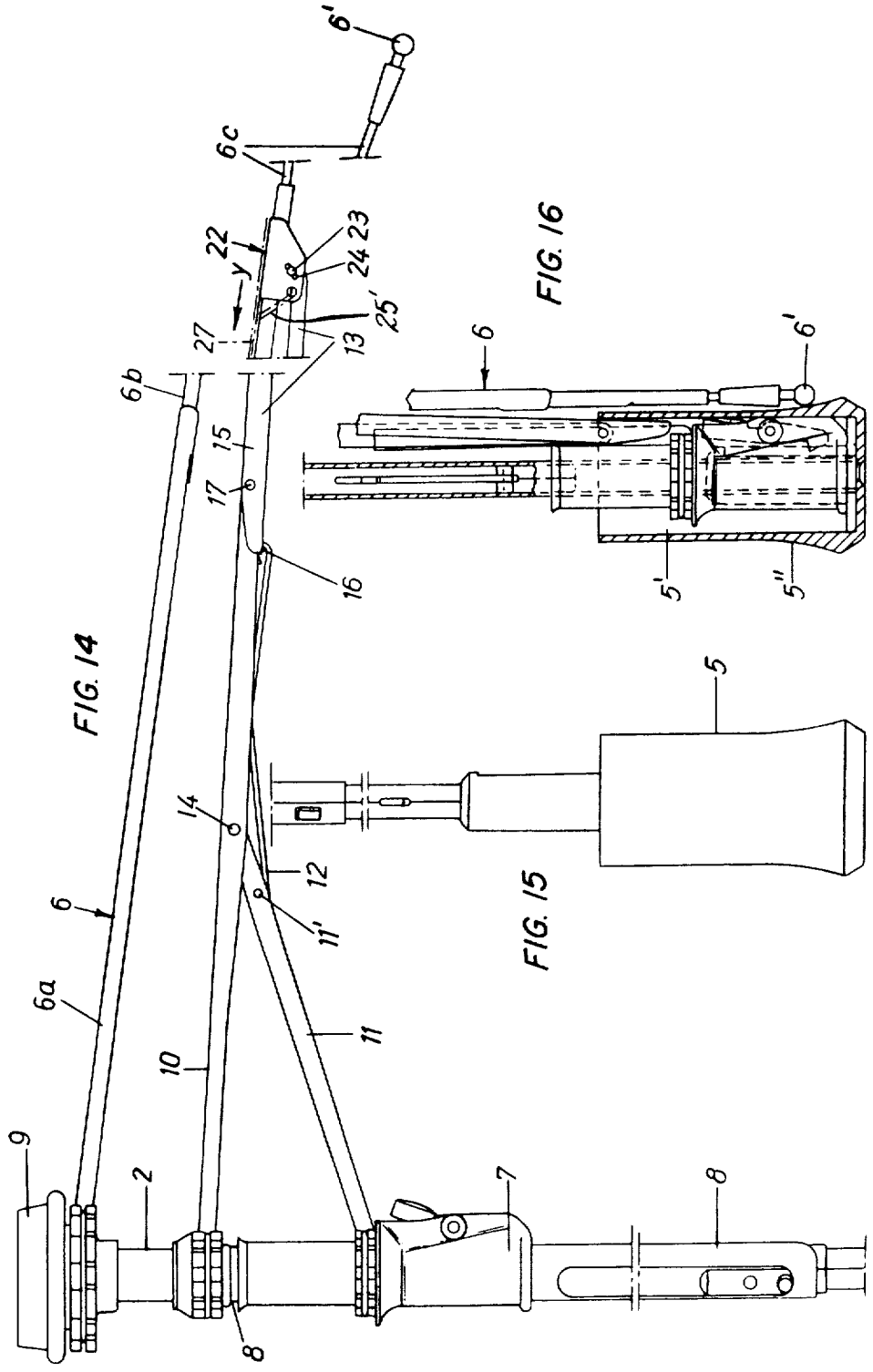

FIG. 14

FIG. 16

FIG. 15

INVENTOR
Heinz WEBER

ATTORNEY

FIG. 19

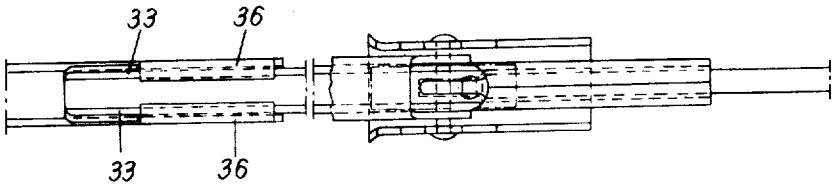

FIG. 17

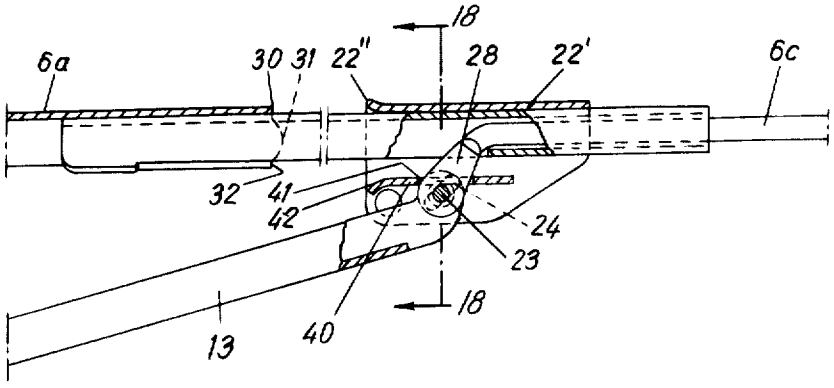

FIG. 18

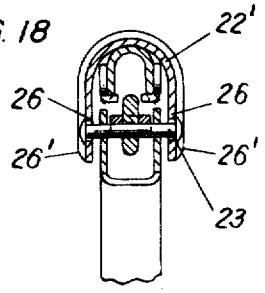

INVENTOR
Heinz WEBER

Allan Scobey
ATTORNEY

COLLAPSIBLE UMBRELLA

BACKGROUND OF INVENTION

1. Field of Invention

The present invention relates to an umbrella and more particularly to an umbrella which is collapsible when in a closed condition.

2. Description of Prior Art.

Reference is made to copending application Ser. No. 035,184 filed May 6, 1970, inventor Heinz Weber. In the above-mentioned copending application, there is described an umbrella having a telescopic stick, a crown at one end of the stick, dome ribs hinged to the crown with each dome rib having three telescopic parts extending with the two outer parts telescoped within the first part in a closed position and the three parts being extended to a fully extended aligned position when the umbrella is in an open condition. A main runner is slidable on the stick and articulated stretcher means are provided between the main runner and the dome ribs for operably fully extending the dome rib to an open position. An auxiliary runner is mounted between the main runner and the crown for slidable movement therebetween. A strut extends from the auxiliary runner to the articulated stretcher means and the stretcher and strut members are of U-shaped construction whereby when the umbrella is in a closed condition the strut members and the stretcher members nest one within the other.

Since the dome ribs are of three sections, it is imperative that adequate internal stability be provided when the umbrella is in an open condition. One of the reasons for this is that the stretcher means engages the dome ribs at a point distant from the stick where the dome rib is of a relatively smaller cross section. The geats which houses the connecting means between the stretcher means and the dome rib has to pass over the different-sized telescopic dome rib sections. The internal cross section of the geats is therefore adapted to pass over the maximum thickness of the largest dome rib section i.e. the inner dome rib section. Therefore, when the umbrella is in its open condition, the geats which in that situation is at the outer end of the central dome rib section and is therefore loosely engaged over this section of the dome rib.

SUMMARY OF INVENTION

It is therefore an aim of the present invention to provide an arrangement whereby the geats firmly engages the end of the central dome rib when the umbrella is in an open condition.

According to the present invention, the geats is of a U-shaped construction with legs extending downwardly from the plane of the dome rib and a hinge pin extends between the legs. Means are also provided on the geats to be attached to a corresponding portion of the dome cover material. The outer dome rib section is connected to the hinge pin in the geats and when the umbrella is in an open condition, the tension of the dome cover displaces the geats downwardly so that the web of the geats presses against the central dome rib.

More specifically, the hinge pin passes through angled guide slots in each leg of the geats. The angle of the guide slots extends diagonally outwardly and upwardly. As the geats is pulled inwardly by the tension of the dome material the geats moves downwardly relative

to the hinge pin which is fixed to the outer section of the dome rib. This presses the web of the geats against the central dome rib.

In a more specific embodiment of the present invention, it is preferable that openings be provided in the legs of the geats for connecting the dome cover. This portion of the legs of the geats in which the openings are defined is preferably bent outwardly.

In a further specific embodiment of the present invention, the outer end of the inner dome rib section is angled inwardly and upwardly so that when the umbrella is being closed the geats will ride upwardly on this angled end of the larger inner dome rib section more easily.

In still another embodiment of the present invention, there is provided a guide plate between the legs of the geats located above the hinge pin. The guide plate is not fixed to any portion of the geats and it simply defines a slot through which the flattened end of the outer dome rib section passes through immediately above the dome rib section in connection with the hinge pin.

In this embodiment it is also contemplated to bend the inner end of the guide plate downwardly. Also it is of advantage to flare the inner end of the geats both in the leg portions and in the web portion. In this manner, the movement of the geats inwardly while the umbrella is being collapsed to a closed position is enhanced since the flared edges of the inner end of the geats usually ride up on the inner dome rib surface as it engages the outer end of the inner dome rib section and the guide plate with its downwardly bent inner portion prevents the hinge pin from being caught on the exposed ends of the inner dome rib section.

BRIEF DESCRIPTION OF THE DRAWINGS.

Having thus generally described the nature of the invention, it will be referred to in more detail by reference to the accompanying drawings illustrating preferred embodiments of the invention therein and in which:

FIG. 1 is a front elevation of the umbrella in an open extended position;

FIG. 2 is a top plan view of the umbrella shown in FIG. 1;

FIG. 3 is an enlarged fragmentary elevational view of one embodiment of the umbrella in an open position;

FIG. 4 is a fragmentary view of one detail of the umbrella shown in FIG. 3 but in a different position;

FIG. 5 is an elevation of the umbrella in a closed collapsed position;

FIG. 6 is an enlarged vertical cross-sectional view of a detail in FIG. 4, looking from the side opposite opposite that seen in FIG. 4;

FIG. 7 is a top plan view of the umbrella shown in FIG. 5;

FIG. 8 is a schematic view illustration of an open umbrella without the dome cover;

FIG. 9 is an enlarged partial bottom plan view taken along lines 9—9 in FIG. 3;

FIG. 10 is a cross section taken along lines 10—10 in FIG. 9;

FIG. 11 is an enlarged partial bottom plan view taken along lines 11—11 in FIG. 3;

FIG. 12 is a vertical cross section taken along lines 12—12 in FIG. 11;

FIG. 13 is a vertical cross-sectional view taken along lines 13—13 in FIG. 11;

FIG. 14 is a fragmentary elevational view of another embodiment of the umbrella in an open position;

FIG. 15 is an enlarged elevational view of a typical handle taken from FIG. 1;

FIG. 16 is an enlarged vertical cross section taken through the handle showing elements of the umbrella when the umbrella is in a closed collapsed position;

FIG. 17 is an enlarged vertical partially cross-sectional view of a detail shown in FIG. 14;

FIG. 18 is a vertical cross-sectional view taken along lines 18—18 in FIG. 17; and

FIG. 19 is a bottom plan view of the detail shown in FIG. 17.

Referring now to FIGS. 1 to 16, there is shown an umbrella having a telescopic umbrella stick 1 comprising tubular sections 2 and 3 and 3' with tube 3' being the smallest tubular section. In FIGS. 1 and 3, the stick 1 is extended with tubular sections 2 and 3 locked in the extended position by the usual ball or spring catch 4. A spring catch 4 is also provided between tube sections 3 and 3'.

At the end of the tube 3' is a handle 5 provided as usual with an annular recess for the accommodation of the runners when the umbrella is in a collapsed position. The main runner 7 and an auxiliary runner 8 slide on the umbrella stick 1.

Tubular stick section 2 mounts a crown 9 and dome ribs 6 are hinged thereto.

Each dome rib 6 comprises three sections of approximately the same length, namely inner section 6*a* near the crown, central section 6*b* and an outer section 6*c*. The sections telescope into each other. The inner section 6*a* and central section 6*b* are preferably of U-shaped profile although outer section 6*c* is of circular cross section. Associated with each dome rib 6 is a support system comprising the following components: auxiliary runner strut 10, main runner, first stretcher 11, auxiliary link 12, dome rib second stretcher 13. The first stretcher 11 is hinged to the main runner 7 while a strut 10 is hinged to the auxiliary runner 8. The first stretcher member 11 is hinged to the auxiliary strut 10 at the pivot point 14 while the strut 10 is hinged to the second stretcher member 13 at the pivot point 17. The link 12 is hinged to the first stretcher at 11 to the second stretcher at pivot point 16.

When the umbrella is in a closed condition such as shown in FIG. 5, first and second stretchers 11 and 13 and auxiliary strut 10 as well as the link member 12 are nested one into the other to accomplish the space-saving advantages of this umbrella.

The strut 10 and stretchers 11 and 13 are of U-shaped cross section of correspondingly reduced dimensions from the second stretcher 13 strut 10 and the first stretcher 11 respectively. The link 12 may, however, have a flat cross section since it enters the U-shaped profile of the first stretcher 11.

The strut 10, first stretcher 11 and auxiliary link 12 are all hinged at their respective ends. The U-shaped profile of the strut 10 is open towards the umbrella stick 1 and the legs of the U-shaped profile subtend the hinge pin 14 at its intermediate point and the first stretcher is hinged thereto within the legs of the strut 10. The open U-side of the first stretcher faces away from the umbrella stick while the auxiliary link 12 is hinged to the hinge 11 formed by punched depressions in the legs of the first stretcher 11 at a point spaced from the hinge pin 14. The other end of auxiliary link 12 is hinged to a hinge pin 16 between the legs 15 of second stretcher 13. At a distance from the hinge pin 16 corresponding to the distance between hinge points 14 and 11' strut 10 is hinged to second stretcher 13 by means of a hinge pin 17.

The strut 10, first stretcher 11, second stretcher 13 and auxiliary link 12 form a parallelogram linkage stabilizing the dome rib support system. The support system is connected to the dome ribs by means of the second stretcher member 13 pivotally connected to a hinge pin 23 subtended between legs 26 of a geats 22. The geats 22 is in the form of a horseshoe having a top web portion extending downwardly into legs 26. Also pivoted to the hinge pin 23 is the end 28 of the outer dome rib section 6*c*. The dome rib section 6*c* is in a circular rod-like construction, the end of the dome rib is bent downwardly and flattened out as shown in FIGS. 6 and 9 for instance. The legs 26 of the geats 22 are provided with guide slots 24 which extend at an angle upwardly and outwardly relative to the umbrella stick, when the umbrella is in an extended position as shown in FIGS. 3 and 4. The hinge pin 23 is adapted to move in the guide slots 24 on each leg of the geats 22. Hinge pin 23 is therefore connecting three elements together, i.e. the second stretcher member 13, the outer dome rib section 6*c* and the geats 22.

The geats 22 must be of course of a size great enough to ride over the larger cross section of the inner dome rib section 6*a*. When the umbrella is in an open position, the geats is loosely fitted over the outer end of the central dome rib portion 6*b*. The cross section of the dome rib section 6*b* is necessarily smaller than the cross section of the dome rib section 6*a* since it telescopes within the section 6*a*. In order to overcome this freeplay between the geats 22 and the dome rib section 6*b* when the umbrella is in an open extended position, openings 25 are provided in the legs 26 of the geats 22 to which a median portion of the dome cover 27 attached by threads as shown in dotted lines 25' in FIG. 3. The attachment of the dome cover 27 to these openings 25 in the legs 26 of the geats 22 is such that when the umbrella is being opened, tension is produced in the dome cover 27 between its connection point to the crown 9 and the geats 22. The tendency therefore is to pull the geats 22 inwardly although the stretcher member 13 is forcing the geats outwardly by means of the hinge pin 23 in the guide slots 24. The result is that the geats 22 rides downwardly inwardly as the hinge pin 23 presses outwardly upwardly in the guide slots 24. Therefore, the upper web portion of the relatively loose geats 22 is forced or pulled by the dome cover to bear against the top of the central dome rib section 6*b* and provide a firm connection to increase the stability of the support system with the extended dome rib sections see FIG. 4.

The hinge pin 23 is suitable for the function outlined above since it assumes a position largely free of play in relation to dome rib 6. The outer section 6*c* runs in a sleeve-like end zone 29 in the central section 6*b* of the dome rib 6. In order to make it possible for geats to slide freely over the step 30, the end of the section 6*a* is chamfered or angled at 31 as shown in FIG. 3 and the

geats 22 passes relatively freely over the terminal ends 32 at the end of the dome rib section 6a.

A stopping means for the extending dome rib sections see FIGS. 11—13 is provided by means of flanges 33 and legs 34 pointing downwardly from central section 6b which come against guide tabs 36 pointed inwards and extending from legs 35 of the inner dome rib section 6a. The end abutment for the outermost section 6c of dome rib 6 forms a sleeve-like rolled end region of the central dome rib section 6b and bent end 28 of the outer section 6c comes up against the front edge 37 of the sleeve-like region.

The embodiment of the umbrella shown in FIGS. 14 through 19 is of a configuration substantially comparable to that of the embodiment just described, except for the special arrangement of strut 10 and second stretcher 13 and the same numbers have therefore been used. In this case, when the umbrella is open, strut 10 and stretcher 13 are almost in a straight line which means that in their operative position their function is a triangular support structure with the dome rib 6. Both are made of U-shaped cross section, the open sides of the U's point in opposite directions.

The extensions 38 of second stretcher 13 extends from pin 17 towards the umbrella stick and defines the extended position assumed by strut 10 and stretcher 13. The legs of the two members lock together in alignment.

The geats 22 in the embodiment shown particularly in FIGS, 18 and 19 is similar to the geats 22 described in the previous embodiment in that it has a hinge pin 23 slidable in oblique guide slot 24. However, there is also provided a guide plate 40 between the legs of the U-shaped geats 22 which has a slotted opening 41 therein. The end 28 of the outer dome rib 6c passes through this opening in the guide plate 40. In effect the guide plate 40 lies on the hinge pin 23 in view of the position of the end 28 of the outer section 6c it is allowed to freely pivot vertically relative to the longitudinal axis of the dome rib. The guide plate 40 includes a downwardly extending lip 42 on the end of the guide plate closest to the umbrella stick.

Accordingly, the guide plate 40 enhances the sliding of the geats 22 as the umbrella is being closed since the downwardly extending lip 42 of the guide plate 40 will easily pass underneath the terminal ends 32 of the inner section 6a and prevent the end 32 from engaging with the hinge pin 23. Furthermore, the web 22' of the geats 22 is at 22 flared along the slide legs and the top web portion as shown in FIGS. 17 and 19. This also enables sliding of the geats 22 as it passes from the central rib portion 6b to the inner rib portion 6a over the edge surfaces 30 and 31 of the end of the inner section 6a.

I claim:

1. An umbrella having a stick, a crown at one end of the stick, dome ribs hinged to the crown, each dome rib having a plurality of telescopic linear sections including a central section adapted to receive the full extent of an outermost section and an inner section adapted to substantially receive the full extent of the central section when said umbrella is in a closed position, at least one runner slidably connected between the runner and the dome ribs for fully extending the dome rib sections from a closed position to an open position and for fully telescoping the dome rib sections from an open position to a closed position, the stretcher means being hingedly connected to the outermost sections of said dome ribs a sliding geats housing said hinge connection and adapted to slide on said dome ribs and carrying the hinge connection of said stretcher means along said inner and central dome rib sections as the umbrella is opened, a dome cover on said dome ribs and attached thereto for stretching the cover into a tensioned condition when the umbrella is in an open position, means on said geats attaching the geats to an intermediate portion of said cover, said geats having means causing limited angular displacement of said geats relative to said hinge connection of said stretcher means and the longitudinal axis of said outer rib sections whereby terminal extension of said stretcher means and said dome rib sections displaces the geats relative to the hinge connection so that they cant into a tight engagement with the outermost dome rib sections when the cover is tensioned beyond the point the geats are attached to the cover when the umbrella is in a fully open condition.

2. An umbrella as defined in claim 1, wherein the means for relatively displacing the geats relative to the hinge connection is characterized by the geats being of U-shaped construction saddled on the dome rib with downwardly extending legs, a pivot pin subtended between said legs, said pivot pin providing the hinge connection for the stretcher means and the outer dome rib section, the legs of the geats including alligned, slots extending angularly upwardly and outwardly and respectively receiving opposite ends of the hinge pin so that the geats can move downwardly relative to the hinge pin when tension force of said cover is applied to the geats in the direction of the umbrella stick.

3. An umbrella as claimed in claim 2 wherein the means for attaching the umbrella cover includes apertures defined in the legs of the geats when said legs are bent outwardly in the area of the apertures.

4. An umbrella as defined in claim 2, wherein a guide plate is provided between the legs of the geats adapted to tilt about a lateral axis so as to enhance the sliding of the geats when the umbrella is being closed as the geats slides over the end of the larger inner rib section.

5. An umbrella as defined in claim 4, wherein a downwardly extending lip is provided on the end of the guide plate closest to the umbrella stick.

6. An umbrella as defined in claim 5 wherein the geats is flared about the sides and web portion at the end of the geats closest to the umbrella stick to enhance the sliding of the geats over the end of the inner dome rib section.

* * * * *