US 20040260508A1

(19) United States

(12) Patent Application Publication (10) Pub. No.: US 2004/0260508 A1

Pattillo et al. (43) Pub. Date: Dec. 23, 2004

(54) SYSTEM AND METHOD FOR FOOT MEASUREMENT FOR ATHLETIC FOOTWEAR

(76) Inventors: **David A. Pattillo**, Atlanta, GA (US); **Benjamin L. Simon**, Atlanta, GA (US)

Correspondence Address:
FINNEGAN, HENDERSON, FARABOW, GARRETT & DUNNER LLP
1300 I STREET, NW
WASHINGTON, DC 20005 (US)

(21) Appl. No.: **10/847,883**

(22) Filed: **May 19, 2004**

Related U.S. Application Data

(60) Provisional application No. 60/472,133, filed on May 21, 2003.

Publication Classification

(51) **Int. Cl.**[7] **A43C 11/00**

(52) **U.S. Cl.** **702/155**

(57) **ABSTRACT**

A method of recommending an appropriate size of athletic foot wear utilizing a gradiated pad. The method comprises: receiving a heel-to-toe length measurement into a computer, wherein the foot-to-toe length measurement is a first shoe size; receiving an arch length measurement into the computer, wherein the arch length measurement is a second shoe size; if the first shoe size is greater than the second shoe size, then using the computer to recommend an athletic foot wear size equal to first shoe size plus an additional one-half to full size; and if the first shoe size is less than the second shoe size, then using the computer to recommend an athletic foot wear size equal to the second shoe size plus an additional zero to one-half size.

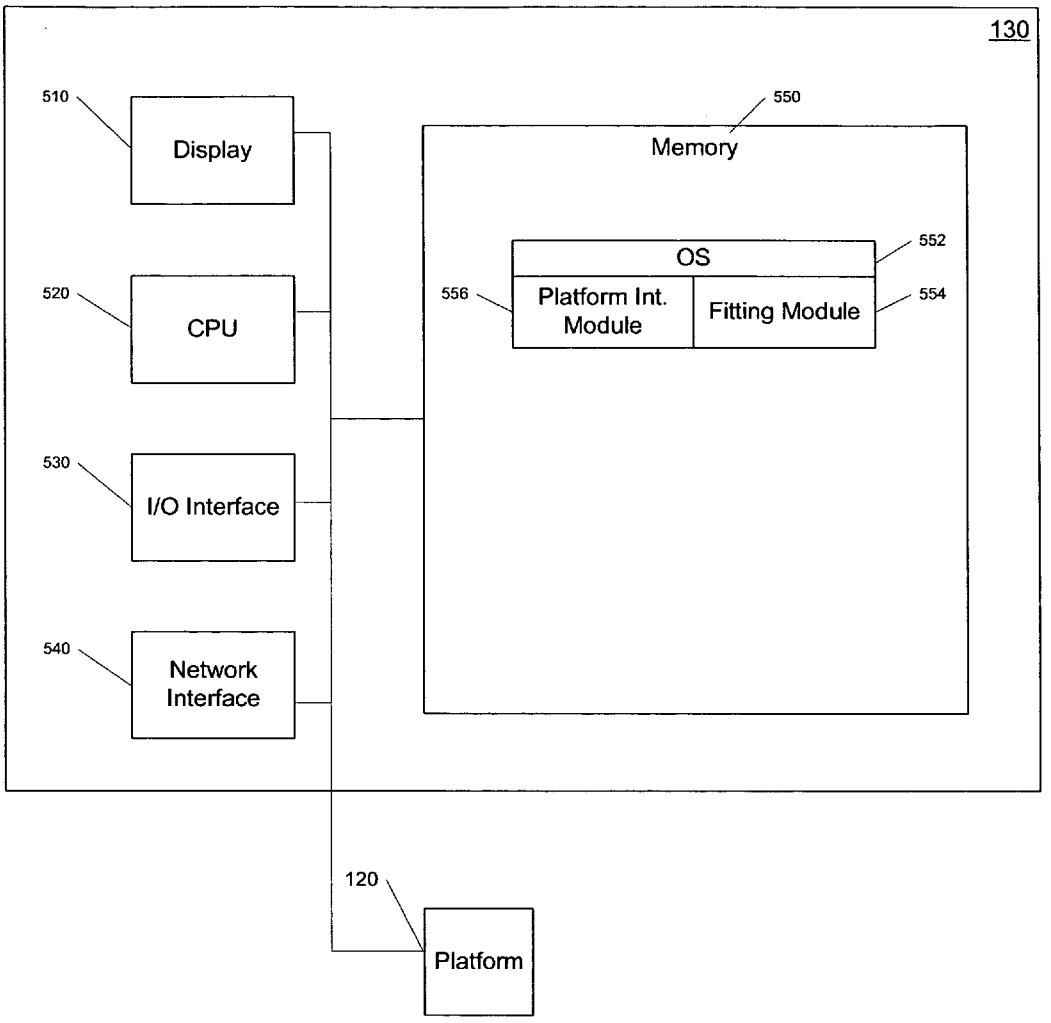

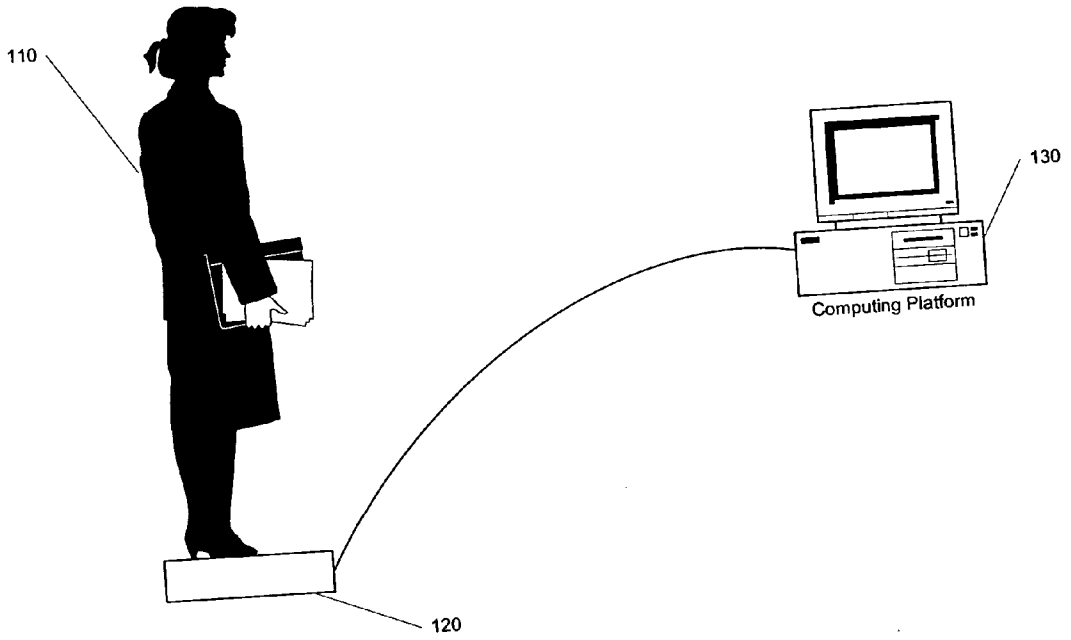

FIG. 1

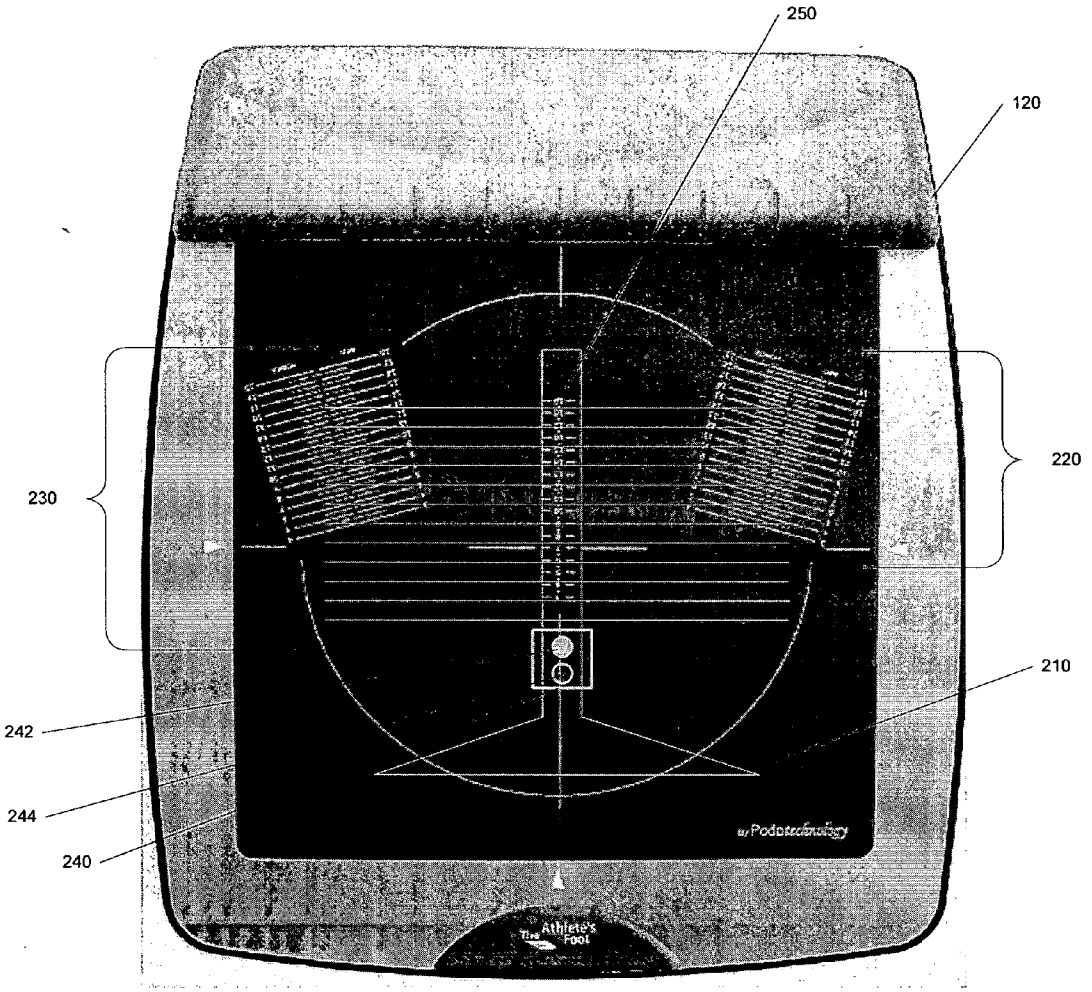
250
120
230
220
210
242
244
240
Podotechnology
The Athlete's Foot

FIG. 2

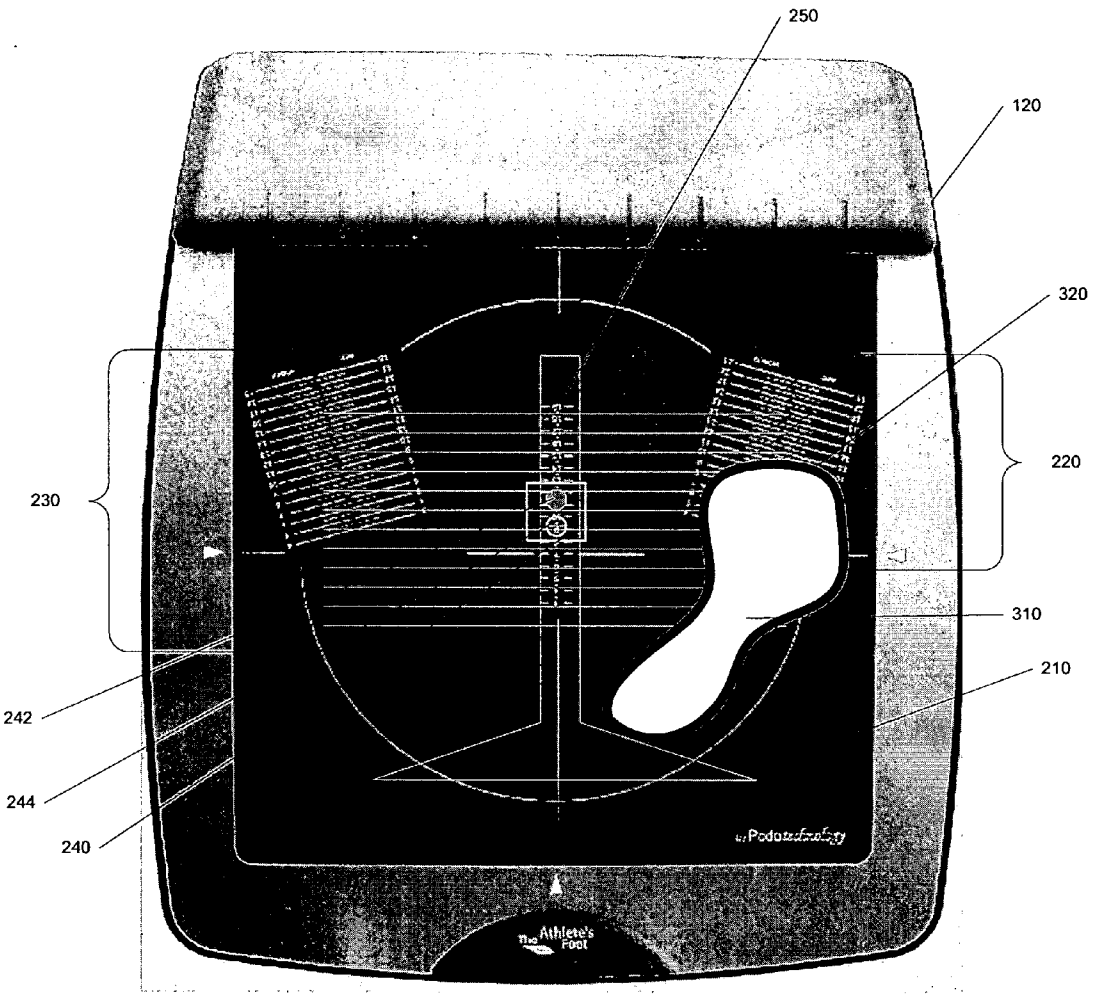

FIG. 3

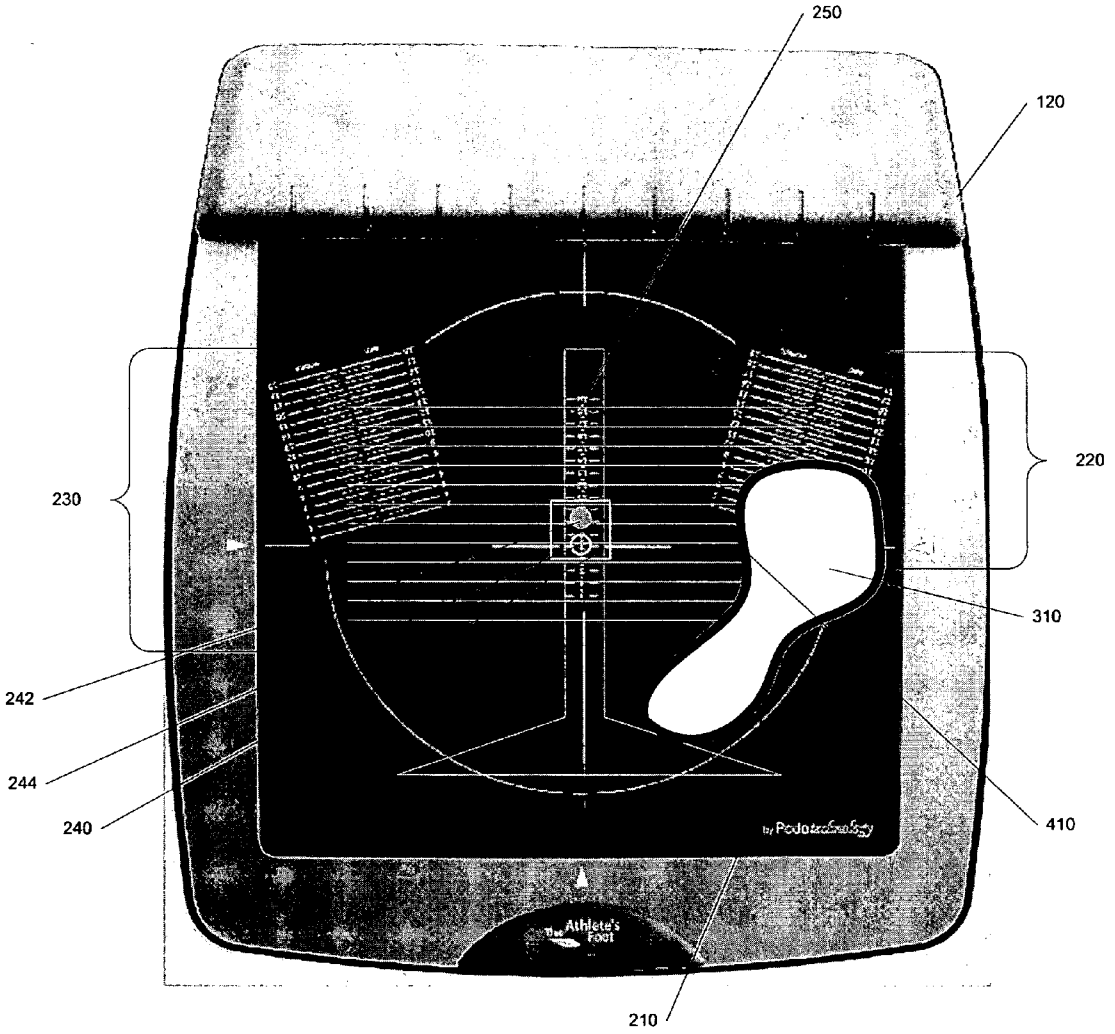

FIG. 4

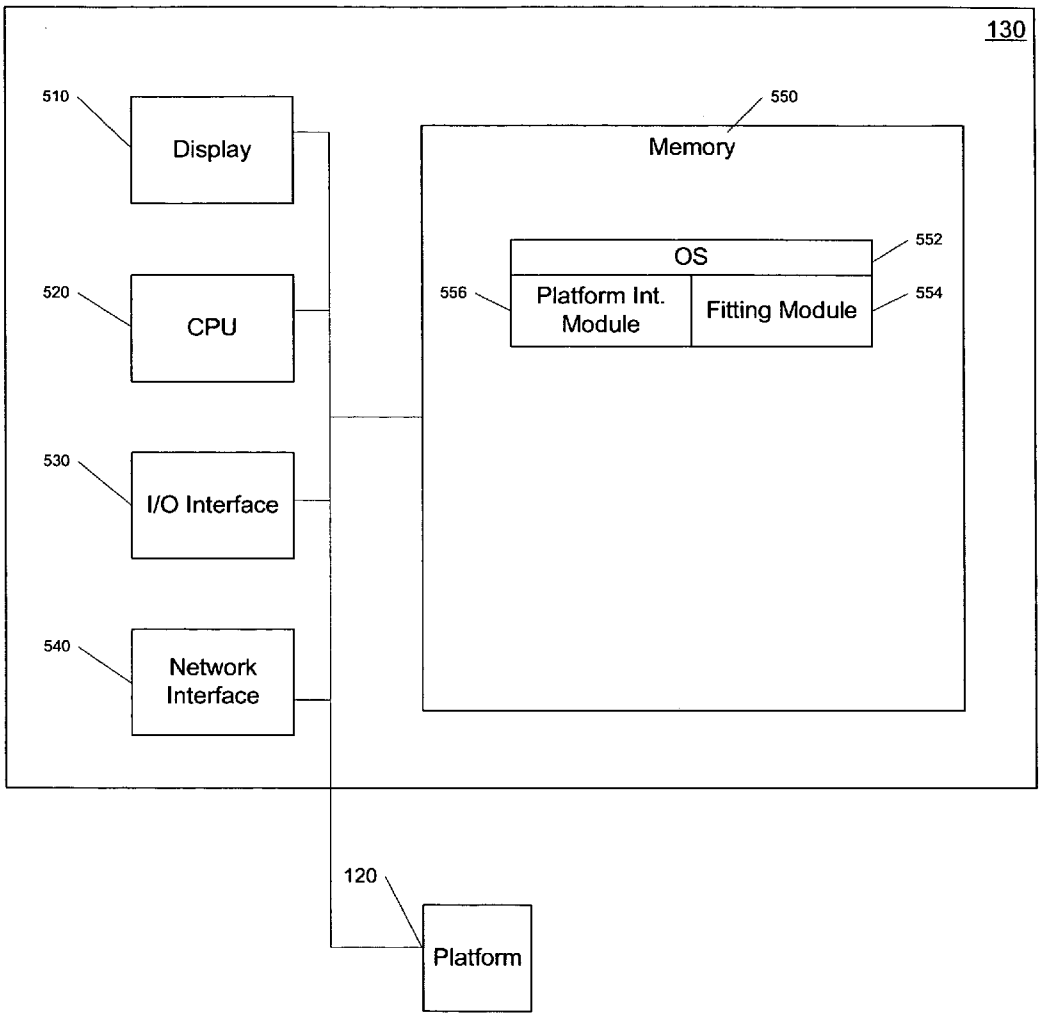
130
510
Display
520
CPU
530
I/O Interface
540
Network Interface
550
Memory
OS
552
556
Platform Int. Module
Fitting Module
554
120
Platform

FIG. 5

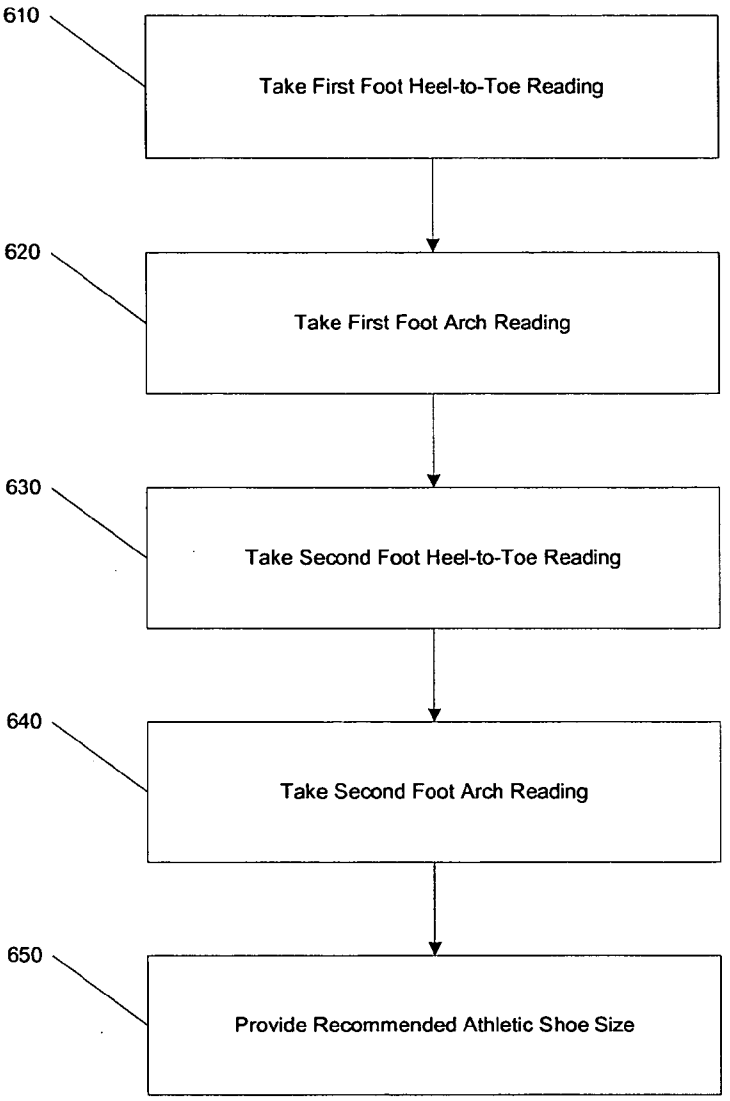
610
Take First Foot Heel-to-Toe Reading
620
Take First Foot Arch Reading
630
Take Second Foot Heel-to-Toe Reading
640
Take Second Foot Arch Reading
650
Provide Recommended Athletic Shoe Size

FIG. 6

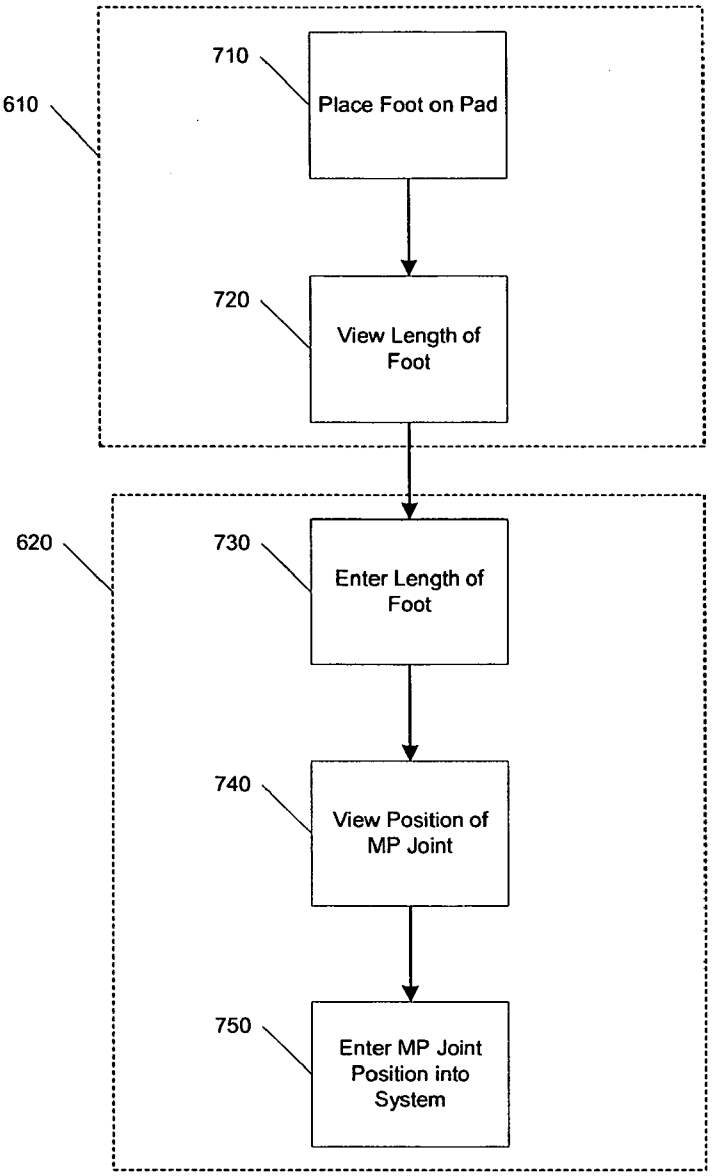
610
710
Place Foot on Pad
720
View Length of Foot
620
730
Enter Length of Foot
740
View Position of MP Joint
750
Enter MP Joint Position into System

FIG. 7

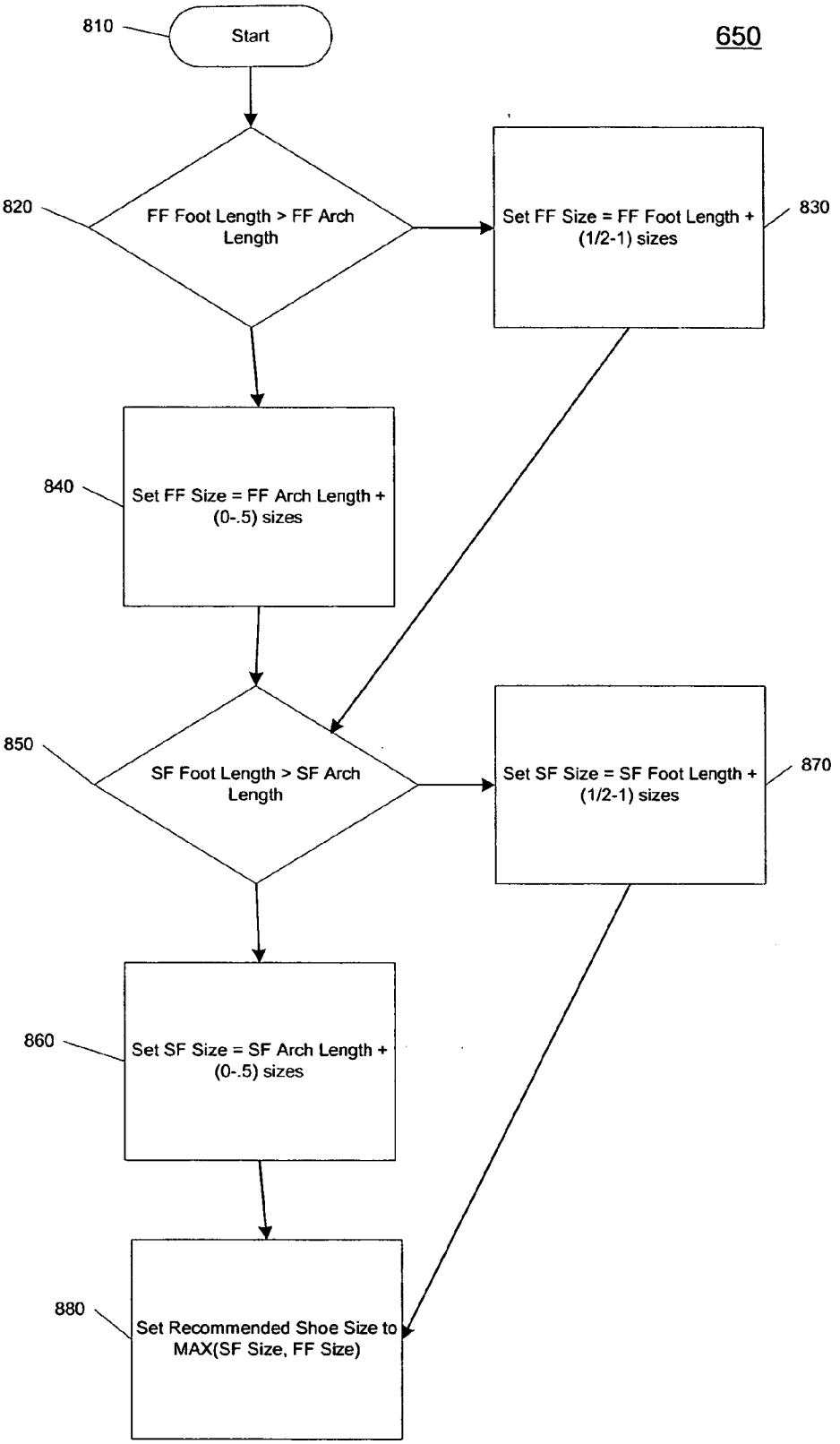
650
810
Start
820
FF Foot Length > FF Arch Length
830
Set FF Size = FF Foot Length + (1/2-1) sizes
840
Set FF Size = FF Arch Length + (0-.5) sizes
850
SF Foot Length > SF Arch Length
870
Set SF Size = SF Foot Length + (1/2-1) sizes
860
Set SF Size = SF Arch Length + (0-.5) sizes
880
Set Recommended Shoe Size to MAX(SF Size, FF Size)

FIG. 8

SYSTEM AND METHOD FOR FOOT MEASUREMENT FOR ATHLETIC FOOTWEAR

CROSS REFERENCE TO RELATED APPLICATION

[0001] This patent application claims the benefit of priority of U.S. Provisional Patent Application No. 60/472,133, entitled "System and Method for Foot Measurement for Athletic Footwear", filed May 21, 2003, which is incorporated herein by reference.

TECHNICAL FIELD

[0002] The invention relates to the field of foot measurement, and more specifically, a system for and method of automating the measurement of a foot using a foot pad and associated computing platform.

BACKGROUND

[0003] Proper foot measurement is critical to providing appropriately sized footwear. Unfortunately, few people realize that one's shoe size is not the same across various types of footwear. For example, in an athletic shoe, one will often wear a size to a size and a half larger shoe than in a dress shoe. This is due to the fact that when placing repeated stress on the foot, for example when running, the foot will spread out. While various shoe sizing devices exist, none provide sizing directed at the athletic shoe market.

[0004] The Brannock Device, designed in 1927, has been the standard foot measuring device employed in retail stores for over seventy-five years. The Brannock Device measures heel-to-toe length, heel-to-ball length ("arch length"), and foot width to provide a recommended shoe size and width. The Brannock Device comprises a pair of heel cups (right heel cup and left heel cup), a moveable arch length pointer, and a moveable width bar. The Brannock Device is complex to use and if often improperly used by sales associates. The following illustration of the operation of the Brannock Device will demonstrate its complexity.

[0005] To use the device, the width bar should be set to its widest position and the arch length indicator should be slid back, so the foot can be positioned easily on the device. Next, the customer removes his footwear and stands, placing his right heel into the right heel cup. The customer should stand with equal weight on both feet to ensure that the foot being measured has elongated and spread to it's maximum size. The heel is properly located against the back of the heel cup, by grasping the customer's ankle and device together. The associate presses the customer's toes flat against the base of the device and looks straight down over the longest toe (not necessarily the first toe) to read toe length.

[0006] Next, the associate places his thumb on the ball joint of the foot, and slides the moveable arch length pointer forward, so that the inside curve of the pointer fits the ball joint of the foot and two high ribs on the pointer come in contact with the associate's thumb. When the pointer is properly located, the lower middle rib will be against the ball joint on the side of the foot. This yields the arch measurement.

[0007] Finally, the associate compares the arch length to the heel-to-toe length and uses the larger of the two measurements as the correct shoe size. If the arch length and heel-to-toe length are the same, this will be the shoe size. If the heel-to-toe length is larger than the arch length, then fit to the heel-to-toe size. If arch length is larger than heel-to-toe, then fit to arch length. Unfortunately, even if used properly, the Brannock Device is designed to provides appropriate shoe sized for dress shoes and not athletic footwear. In athletic footwear, the shoe size needs to by ½ size to a full size larger than in a dress shown. Also, as can be seen from the above description, few sales associates have been properly trained to used the Brannock Device and fewer still actually go through these complex steps.

[0008] Others have attempted to overcome the deficiencies of the Brannock Device, but, as is evident from their lack of commercial success, they have failed to gain a toe hold in the market. In general, a great deal of their effort has been in making electronic or optical gradiated platforms intended to take measurements of the foot through pressure readings or light sensor readings, respectively. However, these systems are inadequate because pressure readings from the feet may fail to account for curved areas of the foot that do not place pressure on the pad, yet may result in additional, unaccounted for length and width of the foot. In addition, none of these efforts have been directed at sizing feet for athletic footwear.

[0009] The present invention is directed to overcoming the one or more problems or disadvantages associated with the prior art.

SUMMARY

[0010] A method of recommending an appropriate size of athletic foot wear utilizing a gradiated pad is disclosed. The method comprises: receiving a heel-to-toe length measurement into a computer, wherein the foot-to-toe length measurement is a first shoe size; receiving an arch length measurement into the computer, wherein the arch length measurement is a second shoe size; if the first shoe size is greater than the second shoe size, then using the computer to recommend an athletic foot wear size equal to first shoe size plus an additional one-half to full size; and if the first shoe size is less than the second shoe size, then using the computer to recommend an athletic foot wear size equal to the second shoe size plus an additional zero to one-half size.

[0011] 7. A system for recommending an appropriate size of athletic foot wear utilizing a gradiated pad is further disclosed. The system comprises: a display for displaying the recommended size of athletic foot wear; a memory; and a processor coupled to the memory and the display. The processor is operable to: receive a heel-to-toe length measurement, wherein the foot-to-toe length measurement is a first shoe size; receive an arch length measurement, wherein the arch length measurement is a second shoe size; if the first shoe size is greater than the second shoe size, then recommend an athletic foot wear size equal to first shoe size plus an additional one-half to full size; and if the first shoe size is less than the second shoe size, then recommend an athletic foot wear size equal to the second shoe size plus an additional zero to one-half size.

[0012] The foregoing summarizes only a few aspects of the invention and is not intended to be reflective of the full scope of the invention as claimed. Additional features and advantages of the invention are set forth in the following description, may be apparent from the description, or may be

learned by practicing the invention. Moreover, both the foregoing summary and the following detailed description are exemplary and explanatory and are intended to provide further explanation of the invention as claimed.

BRIEF DESCRIPTION OF THE DRAWINGS

[0013] The accompanying drawings, which are incorporated in and constitute a part of this specification, illustrate a system consistent with the invention and, together with the description, serve to explain the principles of the invention.

[0014] **FIG. 1** is an illustration of an exemplary embodiment consistent with the present invention in its operating environment.

[0015] **FIG. 2** is an illustration of a gradiated platform for use in an exemplary embodiment consistent with the present invention.

[0016] **FIG. 3** is an illustration of operational measurement of foot length using the gradiated platform in an exemplary embodiment consistent with the present invention.

[0017] **FIG. 4** is an illustration of operational measurement of arch length using the gradiated platform in an exemplary embodiment consistent with the present invention.

[0018] **FIG. 5** is a system diagram of hardware elements within the computing platform in an exemplary embodiment consistent with the present invention.

[0019] **FIG. 6** is a flow diagram of a foot measurement process of an exemplary embodiment consistent with the present invention.

[0020] **FIG. 7** is a flow diagram of a foot length and arch length measuring process of an exemplary embodiment consistent with the present invention.

[0021] **FIG. 8** is a flow diagram of an athletic shoe size calculation process of an exemplary embodiment consistent with the present invention.

DETAILED DESCRIPTION

[0022] Reference will now be made in detail to the present exemplary embodiments consistent with the invention, examples of which are illustrated in the accompanying drawings. Wherever possible, the same reference numbers will be used throughout the drawings to refer to the same or like parts.

[0023] In general, the measurement system according to an exemplary embodiment of the present invention operates by taking two or more foot measurements from one or more feet, for example right foot length and right arch length, and, utilizing a series of equations or lookup tables, provides a recommended athletic shoe size. Athletic shoe sizes tend to run zero to a full size larger than dress shoe sizes. The system uses an algorithm that recommends 0.5 to 1 size larger than dress shoe size if the foot length is larger than the arch length and 0 to 0.5 sizes larger than dress shoe size if the foot length is less than the arch length.

[0024] **FIG. 1** is an illustration of an exemplary embodiment consistent with the present invention in its operating environment. A customer **110** wishing to have measurements taken of her feet stands without shoes upon a gradiated platform **120**. The gradiated platform **120** is in communication with a computing platform **130**. Computing platform **130**, in connection with gradiated platform **120**, measures the heel-to-toe length ("foot length") and the length from the heel to the metatarsal-phalangeal joint ("mp joint") ("arch length") to compute a recommended athletic shoe size.

[0025] **FIG. 2** is an illustration of a gradiated platform for use in an exemplary embodiment consistent with the present invention. The gradiated platform **120** may be coupled to the computing platform **130** via Universal Serial Bus, USB2, Firewire, PCI, or serial connection, for example. A gradiated platform utilized in an exemplary embodiment of the invention is the Medicapteurs PEL 38 Platform. This platform can acquire pressure data from a 32×32 sensor pad of sensors of 1 cm.×1 cm. at over 100 images per second. Further advanced Medicapteurs platforms suitable for use with the invention feature a 48×48 sensor pad of sensors of 0.8 cm×0.8 cm. As will be seen from the following description, a pressure platform, such as the Midcapteurs PEL 38 Platform, is not necessarily required to practice the present invention; other non-output producing platforms can be used in conjunction with a text or mouse input device to replace the output producing functions of the pressure pad, with the non-output producing platform containing comparable markings and fittings.

[0026] Gradiated platform **120** may comprise a heel resting T-bar **210**, foot length gradiations **220**, arch length gradiations **230**, an input slider **240**, and input gradiations **250**. As a customer stands on gradiated platform **120**, resting her heels against T-bar **210**, foot length gradiations **220** indicate the length of the customer's feet. Arch length gradiations **230** provide measurements of the arch length of the customer. Input slider **240** slides up and down the central column of T-bar **210** and comprises a button **242** and a sight **244**. As a measurement needs to be entered into the measurement system, sight **244** may be lined up with the foot length measurement taken from foot length gradiations **220** and button **242** pressed down upon the pad to indicate the foot length. Similarly, where the customer's mp joint lines up with arch length gradiations **230**, sight **244** may be aligned with arch length gradiations **230** and button **242** pressed down upon the pad to indicate arch length. While slider **240** and gradiated platform **120** are utilized to provide the inputs to computing platform **130**, those skilled in the art will appreciate that visual readings could be taken off gradiated platform **120**, with the data being entered by the customer or another directly into computing platform **130** without computing platform **130** receiving any direct, electrical input from gradiated platform **120**.

[0027] For illustrative purposes, **FIGS. 3 and 4** illustrate operation of the system with respect to only the right foot. The same procedure would apply to measurement of the left foot. **FIG. 3** is an illustration of operational measurement of foot length using the gradiated platform in an exemplary embodiment consistent with the present invention. As the customer stands upon gradiated platform **120**, her foot print **310** is shown on the gradiated platform **120**. To measure the foot length, the foot length is measured from the longest portion of her foot **320**. In this example, this would indicate a length of 11 from the foot length gradiations **220**. Once the foot length is determined, input slider **240** is slid along the central column of T-bar **210** until sight **244** aligns over the

11 on input gradiations **250**. At this point, button **242** may be pressed providing a pressure input to gradiated platform **120**. Gradiated platform **120** will provide this y coordinate to computing platform **130** which may use a lookup table or equation to determine that an 11 has been input as the right foot length.

[**0028**] **FIG. 4** is an illustration of operational measurement of arch length using the gradiated platform in an exemplary embodiment consistent with the present invention. Appropriate arch length gradiation **230** is selected based on which arch length gradiation **230** aligns with the customer's mp joint. Slider **240** is slid along T-bar **210** until sight **244** aligns with this gradiation **230**. At this point, button **242** is pressed providing a pressure input to gradiated platform **120**. Gradiated platform **120** will provide this y coordinate to computing platform **130** which may use a lookup table or equation to determine the measured arch length of the right foot.

[**0029**] A similar process may be repeated for the left foot. Computing platform **130** may provide visual or audio prompts to the operator of the measurement system to prompt for the series of inputs: right length, right arch, left length, left arch. Those skilled in the art will appreciate that the system will function comparably with different ordered input or even with measurement being only taken for a single foot. Once the measurements are taken, computing platform **130** will provide a recommended athletic shoe size or range of athletic shoe sizes.

[**0030**] **FIG. 5** is a system diagram of hardware elements within the computing platform in an exemplary embodiment consistent with the present invention. As illustrated in **FIG. 5**, a system environment of the computing platform **130** may include a display **510**, a central processing unit **520**, an input/output interface **530**, a network interface **540** and memory **550** coupled together by a bus. Computing platform **130** is adapted to include the functionality and computing capabilities to implement the described measuring and computing functions of the measurement system. The input, output, and monitoring of the system may be provided on display **510** for viewing.

[**0031**] As shown in **FIG. 5**, Computing platform **130** may comprise a PC or mainframe computer for performing various functions and operations of embodiments of the invention. Computing platform **130** may be implemented, for example, by a general purpose computer selectively activated or reconfigured by a computer program stored in the computer, or may be a specially constructed computing platform for carrying-out the features and operations of the present invention. Computing platform **130** may be separate or integral to the platform **120**. Computing platform **130** may also be implemented or provided with a wide variety of components or subsystems including, for example, one or more of the following: one or more central processing units **520**, a co-processor, memory **550**, registers, and other data processing devices and subsystems. Computing platform **130** may also communicate or transfer customer records and reports via I/O interface **530** and/or network interface **540** through the use of direct connections or communication links to other elements of the measurement system. For example, a firewall in network interface **540**, prevents access to the platform by unpermitted outside sources.

[**0032**] Alternatively, communication between computing platform **130** and modules **510**, **530**, and **540** can be achieved through the use of a network architecture (not shown). In the alternative embodiment (not shown), the network architecture may comprise, alone or in any suitable combination, a telephone-based network (such as a PBX or POTS), a local area network (LAN), a wide area network (WAN), a dedicated intranet, and/or the Internet. Further, it may comprise any suitable combination of wired and/or wireless components and systems. By using dedicated communication links or shared network architecture, computing platform **130** may be located in the same location or at a geographically distant location from modules **510**, **530**, and **540**.

[**0033**] I/O interface **530** of the system environment shown in **FIG. 3** may be implemented with a wide variety of devices to receive and/or provide the data to and from the measurement system and platform. I/O interface **530** may include an input device, a storage device, and/or a network. The input device may include a keyboard, a mouse, a disk drive, video camera, magnetic card reader, or any other suitable input device for providing records to the measurement system.

[**0034**] Network interface **540** may be connected to a network, such as a Wide Area Network, a Local Area Network, or the Internet for providing read/write access to records.

[**0035**] Memory device **550** may be implemented with various forms of memory or storage devices, such as read-only memory (ROM) devices and random access memory (RAM) devices. Memory device **550** may also include a memory tape or disk drive for reading and providing records on a storage tape or disk as input to the measurement system. Memory device **550** may comprise: an operating system **552**, a fitting module **554** for measuring and calculating foot size and recommended athletic footwear size; and a platform interface module **356** for reading information from platform **120**.

[**0036**] **FIG. 6** is a flow diagram of a foot measurement process of an exemplary embodiment consistent with the present invention. Initially, a customer stands upon the gradiated platform or pad. At stage **610**, the first foot, e.g., the right foot, heel-to-toe, or foot length, reading is taken. At stage **620**, the first foot arch length reading is taken. At stage **630**, the second foot foot length reading is taken. At stage **640**, the second foot arch reading is taken. Finally, at stage **650**, the recommended athletic shoe size is calculated and provided to the customer.

[**0037**] **FIG. 7** is a flow diagram of a foot length and arch length measuring process of an exemplary embodiment consistent with the present invention. At stage **710**, the user places her foot on the pad. At stage **720**, the user views the length of the foot, from the foot length gradiations, and enters this length into the system using, for example, the input slider at stage **730**. At stage **740**, the user views the position of the mp joint, follows the arch length gradiations from the input joint to the input gradiations on the pad, and, at stage **750**, enters the mp joint position into the system using, for example, the input slider. A similar process may be repeated for the second foot.

[**0038**] **FIG. 8** is a flow diagram of an athletic shoe size calculation process of an exemplary embodiment consistent with the present invention. At stage **810**, the calculation

process **650** begins. At stage **820**, the first foot foot length is compared to the first foot arch length. If the first foot foot length is greater than the first foot arch length, then, at stage **830**, the recommended first foot athletic shoe size is set to the first foot foot length plus another one-half to full size. If the first foot foot length is less than the first foot arch length, then, at stage **840**, the recommended first foot athletic shoe size is set to the first foot arch length plus another zero to one-half size.

[**0039**] At stage **850**, the second foot foot length is compared to the second foot arch length. If the second foot foot length is greater than the second foot arch length, then, at stage **870**, the recommended second foot athletic shoe size is set to the second foot foot length plus another one-half to full size. If the second foot foot length is less than the second foot arch length, then, at stage **860**, the recommended second foot athletic shoe size is set to the second foot arch length plus another zero to one-half size.

[**0040**] At stage **880**, the recommended athletic shoe size is set to the larger of the first foot recommended athletic shoe size and the second foot recommended athletic shoe size.

[**0041**] Those skilled in the art will appreciate that all or part of systems and methods consistent with the present invention may be stored on or read from other computer-readable media, such as: secondary storage devices, like hard disks, floppy disks, and CD-ROM; a carrier wave received from the Internet; or other forms of computer-readable memory, such as read-only memory (ROM) or random-access memory (RAM).

[**0042**] Furthermore, one skilled in the art will also realize that the processes illustrated in this description may be implemented in a variety of ways and include multiple other modules, programs, applications, scripts, processes, threads, or code sections that all functionally interrelate with each other to accomplish the individual tasks described above for each module, script, and daemon. For example, it is contemplated that these programs modules may be implemented using commercially available software tools, using custom object-oriented code written in the C++ programming language, using applets written in the Java programming language, or may be implemented as with discrete electrical components or as one or more hardwired application specific integrated circuits (ASIC) custom designed just for this purpose.

[**0043**] It will be readily apparent to those skilled in this art that various changes and modifications of an obvious nature may be made, and all such changes and modifications are considered to fall within the scope of the appended claims. Other embodiments of the invention will be apparent to those skilled in the art from consideration of the specification and practice of the invention disclosed herein. It is intended that the specification and examples be considered as exemplary only, with a true scope and spirit of the invention being indicated by the following claims and their equivalents.

What is claimed is:

1. A method of recommending an appropriate size of athletic foot wear utilizing a gradiated pad, comprising:

receiving a heel-to-toe length measurement into a computer, wherein the foot-to-toe length measurement is a first shoe size;

receiving an arch length measurement into the computer, wherein the arch length measurement is a second shoe size;

if the first shoe size is greater than the second shoe size, then using the computer to recommend an athletic foot wear size equal to first shoe size plus an additional one-half to full size; and

if the first shoe size is less than the second shoe size, then using the computer to recommend an athletic foot wear size equal to the second shoe size plus an additional zero to one-half size.

2. The method of claim 1, wherein the foot-to-toe length is measured using the gradiated pad.

3. The method of claim 1, wherein the arch length is measured using the gradiated pad.

4. The method of claim 1, wherein the arch length measurement is based on the position of the mp joint.

5. The method of claim 1, wherein the gradiated pad is a pressure pad and further wherein receiving a heel-to-toe length measurement further comprises:

receiving an input into the computer from the pressure pad, wherein the input comprises an x,y input from the pressure pad; and

translating, in the computer, the x,y input into a heel-to-toe length measurement.

6. The method of claim 1, wherein the gradiated pad is a pressure pad and further wherein receiving an arch length measurement further comprises:

receiving an input into the computer from the pressure pad, wherein the input comprises an x,y input from the pressure pad; and

translating, in the computer, the x,y input into an arch length measurement.

7. A system for recommending an appropriate size of athletic foot wear utilizing a gradiated pad, the system comprising:

a display for displaying the recommended size of athletic foot wear;

a memory; and

a processor, coupled to the memory and the display, the processor operable to:

receive a heel-to-toe length measurement, wherein the foot-to-toe length measurement is a first shoe size;

receive an arch length measurement, wherein the arch length measurement is a second shoe size;

if the first shoe size is greater than the second shoe size, then recommend an athletic foot wear size equal to first shoe size plus an additional one-half to full size; and

if the first shoe size is less than the second shoe size, then recommend an athletic foot wear size equal to the second shoe size plus an additional zero to one-half size.

8. The system of claim 7, wherein the arch length measurement is based on the position of the mp joint.

9. The system of claim 7, wherein the gradiated pad is a pressure pad and further wherein the processor is operable to:

receive an input from the pressure pad, wherein the input comprises an x,y input from the pressure pad; and

translate the x,y input into a heel-to-toe length measurement.

10. The system of claim 7, wherein the gradiated pad is a pressure pad and further wherein the processor is operable to:

receiving an input into the computer from the pressure pad, wherein the input comprises an x,y input from the pressure pad; and

translate the x,y input into an arch length measurement.

* * * * *